Toll-free: 1-800-99VALCO
Phone: (+1) 419-678-8731
Fax: (+1) 419-678-2200

WWW.VAL-CO.COM

CATALOG SECTIONS
Effective May 5, 2025

SALES CATALOG

SECTION NUMBER	CONTENTS
01	GENERAL INFORMATION
02	FEED BINS
03	SCALES
04	FLEXIBLE AUGER FEED DELIVERY & FILL SYSTEMS
05	CHAIN DISK FEED DELIVERY
06	VOLUME DROPS
07	SWINE EQUIPMENT
09	CENTER BELT MECHANICAL NEST
10	SIDE BELT MECHANICAL NEST
11	COMMUNITY NEST
12	CONVENTIONAL NESTS
13	POULTRY FLOORING
14	FLAT CHAIN FEEDING
15	BROILER PAN FEEDING
16	ROOSTER PAN FEEDING
17	TURKEY PAN FEEDING
19	WINCHING
20	MOTORS & ELECTRICAL
22	FLOOR WATERING PRICING
23	CAGE WATERING INFO
24	CAGE WATERING PRICING
25	START-GROW CAGE WATERING PRICING
26	CONTROLS
27	VENTILATION - GENERAL INFO
28	FANS
29	INLETS
30	ACTUATORS & CURTAIN MACHINES
31	LIGHT TRAPS
33	HIGH PRESSURE FOG SYSTEM
35	POLAIR EVAPORATIVE COOLING PADS
38	SEE SECTION 35 (Was Cooling Pads)
39	BROODERS
40	TUBE HEATERS
41	INFRA-RADIANT GAS HEATERS
42	SPACE HEATERS
43	CREMATORS
44	LIGHTING
46	MICE & RODENT TRAPS
47	SAMPLES

Toll-free: 1-800-99VALCO
Phone: (+1) 419-678-8731
Fax: (+1) 419-678-2200

WWW.VAL-CO.COM

CATALOG SECTIONS
Effective May 5, 2025

SALES CATALOG - ALPHABETICAL LISTING

SECTION NUMBER	CONTENTS
01	GENERAL INFORMATION
30	ACTUATORS & CURTAIN MACHINES
15	BROILER PAN FEEDING
39	BROODERS
23	CAGE WATERING INFO
24	CAGE WATERING PRICING
09	CENTER BELT MECHANICAL NEST
05	CHAIN DISK FEED DELIVERY
11	COMMUNITY NEST
26	CONTROLS
12	CONVENTIONAL NESTS
43	CREMATORS
28	FANS
02	FEED BINS
14	FLAT CHAIN FEEDING
04	FLEXIBLE AUGER FEED DELIVERY & FILL SYSTEMS
22	FLOOR WATERING PRICING
33	HIGH PRESSURE FOG SYSTEM
41	INFRA-RADIANT GAS HEATERS
29	INLETS
31	LIGHT TRAPS
31	LIGHTING
46	MICE & RODENT TRAPS
20	MOTORS & ELECTRICAL
35	POLAIR EVAPORATIVE COOLING PADS
13	POULTRY FLOORING
16	ROOSTER PAN FEEDING
47	SAMPLES
03	SCALES
38	Cooling Pads - USE SECTION 35 - POLAIR EVAPORATIVE COOLING PADS
10	SIDE BELT MECHANICAL NEST
42	SPACE HEATERS
25	START-GROW CAGE WATERING PRICING
07	SWINE EQUIPMENT
40	TUBE HEATERS
17	TURKEY PAN FEEDING
27	VENTILATION - GENERAL INFO
06	VOLUME DROPS
19	WINCHING

SECTION 01
GENERAL INFORMATION

IN THIS CATALOG SECTION

PAGE NUMBER	CONTENTS
01-02 thru 01-04	Warranty
01-04	Policies - Returns and Terms
01-05	Policies - Orders, Shipments and Shortages
01-06	Policies - Freight Claims

CONTACT INFORMATION

CORPORATE HEADQUARTERS
2710 Division Hwy, PO Box 8
New Holland, PA 17557
Phone: 717-354-4586 • Fax: 717-355-2505

SALES / CUSTOMER SERVICE

USA & CANADA

Toll-free: 800-99VALCO (800-998-2526)
Phone: (+1) 419-678-8731 • Fax: (+1)419-678-2200
E-Mail: sales@val-co.com

Mailing Address:
VAL-CO • 210 E. Main St. • Coldwater, OH 45828 USA

INTERNATIONAL

HOLLAND:
VAL-CO B.V.
Mail&Shipping: Handelsweg 1 3411 NZ · Lopik The Netherlands
Phone: (+31) 348-55-43-43
E-Mail: info@val-co.com

CHINA:
Shanghai Val Livestock Equipment Co. Ltd.
Floor 1, Bldg 1, No. 2988, Hu Min Road
Minhang, Shanghai
P.R. China, Postal Code - 201108
Phone: (+86) 21-687-40055 • Fax: (+86) 21-687-40695
E-Mail: china.sales@val-co.com

INDIA:
Val Products India Pvt Company
E-219, MIDC, Baramati 413133
District: Pune, Maharashtra State, India
Phone: (+91) 2112-645937• Fax: (+91) 2112-243058
E-Mail: india.sales@val-co.com

Toll-free: 1-800-99VALCO
Phone: (+1) 419-678-8731
Fax: (+1) 419-678-2200

VAL PRODUCTS, INC. WARRANTIES; EFFECTIVE JANUARY 1, 2023

MANUFACTURED PRODUCTS STANDARD WARRANTY:

Val Products, Inc. (Valco) warrants that Valco-manufactured products (other than the products subject to an extended warranty set forth below) will be free of defects in material and workmanship, when used in a usual and customary fashion, for a period of one (1) year from the date of original purchase from an authorized Valco distributor or three (3) years from the date of original purchase from Valco, whichever period expires first. If Valco is notified that such a defect exists within that time and, upon inspection, agrees that the product is defective, Valco will, at its option, (a) repair or replace (EXW Valco's plant) the defective product, or (b) refund to the original purchaser (Valco's distributor) the original purchase price paid for the defective product less any installation, shipping, or other charges associated with the original purchase. All defective products must be returned to a Valco designated location for evaluation. Valco's determination as to whether the product is defective is final. See the General Conditions and Limitations.

MANUFACTURED PRODUCTS WITH EXTENDED WARRANTIES:

Product	Extended[1] Warranty Coverage Period	Limited[2] Warranty Coverage Period	Total Warranty Coverage Period (Extended + Limited)
VR & VBL series drinkers	5 years	5 years	10 years
VQ, VA & VBR series drinkers	2 years	3 years	5 years
Roll-formed tube	3 years	7 years	10 years
Coreless auger[3]	3 years	7 years	10 years
Feed pans and grills	2 years	3 years	5 years
Fiberglass fan housings	Lifetime[4]	na	Lifetime[4]
Aluminum Fan Blades	Lifetime[4]	na	Lifetime[4]
Z-Fan™ Housings[5]	7 years	na	7 years

[1]Extended Warranty Coverage: Valco warrants products subject to an extended warranty (above) will be free of defects in material and workmanship, when used in a usual and customary fashion, for the period of time as stated from the date of original purchase by an authorized Valco distributor. If Valco is notified that such a defect exists within that time and, upon inspection, agrees that the product is defective, Valco will, at its option, (a) repair or replace (EXW Valco's plant) the defective product, or (b) refund to the original purchaser the original purchase price paid for the defective product less any installation, shipping, or other charges associated with the original purchase. All defective products must be returned to a Valco designated location for evaluation. Valco's determination as to whether the product is defective is final. See the General Conditions and Limitations.

[2]Limited warranty coverage products will be provided at a charge rate of 50% off the Valco list price at the time the warranty claim is made known to the company in writing and is subject to Valco's standard warranty policy conditions and limitations.

[3]Coreless Auger warranty is voided if conveying materials with greater than 18% moisture content

[4]Lifetime warranty for fiberglass fan housings and cast aluminum blades is limited to products that prove to be defective in workmanship or material and become unusable over the life of the structure where the product was originally installed, provided that the product has remained undisturbed in its original installation location, and will be repaired or replaced, at Valco's option, at no charge (excluding labor of removal and installation and shipping), EXW Valco's plant.

[5]Z-Fan housings are warranted for 7 years against rust through when employed in poultry housing ventilation applications only. Fan components excluding housing are covered by Valco's standard warranty

GENERAL CONDITIONS AND LIMITATIONS:

1 The Product must be installed and operated in accordance with instructions published by Valco or the warranty will be void.

2 Warranty will be void if all components of the product or system are not original equipment supplied by the manufacturer.

3 Products not manufactured by Valco and supplied by outside manufacturers (such as, but not limited to, certain electrical motors, certain controls, gas valves, etc.) are warranted separately by the respective manufacturer and only to the extent of the manufacturer's warranty.

4 Valco feed bins are designed to be used with free-flowing agricultural feed materials with a density proximate to 40 pounds (18.15 kilograms) per cubic foot (.03 cubic meter). Soybean meal, meat scraps and other materials, both agricultural and industrial, are not free flowing and may significantly exceed recommended material density. Feed bin structural failure from their use will void this warranty.

5 Valco does not warrant against feed bin structural failure, or bin unloading components such as flexible auger transitions and boots that arises due to the addition of aftermarket devices attached to, or installed within or attached to the feed bin structure for the purpose of enhancing feed material flow and/or the elimination of feed bridging issues.

6 Warranty applies only to products used in applications as originally intended by Valco – other applications in industry or commerce are not covered by the Warranty. Valco products are expressly not designed or authorized for use in any applications where intended to sustain or support human life or any other application where the failure of the product could result in personal injury or death.

7 Malfunctions resulting from misuse, abuse, mismanagement, negligence, alteration, accident, lack of proper maintenance, lightning strikes, electrical power surges, or electrical power interruption shall not be considered defects under the Warranty. Corrosion, material deterioration and/or equipment malfunction caused by or consistent with the excessive additions of chemicals, minerals, sediments or other foreign elements with the product shall not be considered defects under the Warranty.

8 VALCO WILL NOT, UNDER ANY CIRCUMSTANCES, BE LIABLE FOR ANY KIND OF SPECIAL, INCIDENTAL, CONSEQUENTIAL, OR CONTINGENT DAMAGES INCLUDING, BUT NOT LIMITED TO, LOST OR DAMAGED PRODUCT, GOODS OR LIVESTOCK, COSTS OF TRANSPORTATION, LOST SALES, LOST ORDERS, LOST INCOME, INCREASED OVERHEAD, LABOR AND INCIDENTAL COSTS AND OPERATIONAL INEFFICIENCIES. IN NO EVENT SHALL THE WARRANTY LIABILITY EXCEED THE INVOICED PRICE OF THE PRODUCT TO THE ORIGINAL PURCHASER.

9 THE WARRANTIES SET FORTH ABOVE CONSTITUTE VALCO'S ENTIRE AND SOLE WARRANTY. VALCO EXPRESSLY DISCLAIMS ANY AND ALL OTHER WARRANTIES INCLUDING, BUT NOT LIMITED TO, ANY AND ALL OTHER EXPRESS OR IMPLIED WARRANTIES AS TO THE MERCHANTABILITY, FITNESS FOR A PARTICULAR PURPOSE OR USE, DESCRIPTION OF QUALITY OF THE PRODUCT FURNISHED, AND ANY OTHER WARRANTY ARISING BY OPERATION OF LAW, CUSTOM OR USAGE.

10 Valco denies any authorization of any distributor, dealer, agent, or employee to modify, extend, or otherwise alter the conditions of any warranty in addition to, or in lieu of, those conditions and terms expressly stated above. Any exceptions not noted in the body of the Warranty must be authorized in writing by an officer of Valco. Valco reserves the right to change or delete models, or change specifications at any time without notice or obligation to improve previous products.

RETURNS

No merchandise may be returned without authorization. An RMA (Returned Materials Authorization) must be obtained from Customer Service for all returns.

Information required to get an RMA number: Original invoice reference, type of product to be returned, specific reason for return, and when & how the return will take place.

Items to be returned should be properly identified. RMA number must be clearly shown on all returned packages or the RMA shipment may be refused at the warehouse. Returned items must be properly packaged; items that represent a biohazard must be properly cleaned and completely sealed or delivery may be refused.

All items must be returned within 90 days of the RMA date to be eligible for credit, warranty or other support. If items are not returned within 90 days, the RMA will expire and any credit or warranty claim will be denied.

Transportation charges on returns must be prepaid.

All items are subject to inspection before final approval of any defective product replacement or warranty claim. Returns are subject to a 15% restocking charge; also, there might be an additional charge to cover any necessary repackaging of a returned item.

No non-warranty returns after six months beyond date of purchase.

Parts are always billed when shipped. No orders are shipped "No Charge." If parts returned are defective and within warranty, credit will be allowed against billing.

TERMS

Unless otherwise noted in writing, terms are net 30 from date of invoice to accounts with approved open account credit status.

Additional discounts, if/when applicable, apply only to merchandise purchased - discounts do not apply to freight, set up, delivery, and other miscellaneous charges.

The postmark will serve as the date of receipt on all payments.
Past due accounts are subject to a finance charge of 1.5% per month (18% annually).

Valco reserves the right to not ship to past due accounts.

ORDERS

All equipment and parts should be ordered by both catalog number and item description.

Valco recommends that all orders be faxed, mailed or e-mailed to avoid mistakes.

Order confirmations are available upon request.

Minimum charge is $35.00 at invoice cost. Please order in sufficient volume to take advantage of this minimum charge.

SHIPMENTS

Unless otherwise noted in writing, all shipments are ex-works Valco's shipping point, subject to Incoterms 2020®.

Shipment of backorders is EXW shipping point unless otherwise noted in writing.

Shipments requiring extra crating and packaging or extra handling will incur an additional charge.

SHORTAGES

Please check all shipments thoroughly upon receipt and report any shortages promptly.

All shortages must be claimed within 60 days of the shipment date for domestic and 90 days for international shipments.

Freight Damages MUST be noted on the BOL at delivery or carrier will deny damage claims.

Toll-free: 1-800-99VALCO
Phone: (+1) 419-678-8731
Fax: (+1) 419-678-2200

POLICIES

FREIGHT CLAIMS

Merchandise shipped via common carrier becomes the property of the customer at the time of shipment.

Accept shipments only after noting any damage or shortage on the delivery receipt; report hidden damage to the carrier as soon as possible.

File your claim promptly with the delivering carrier.

VAL-CO customer service personnel will assist you in this process whenever possible.

MISCELLANEOUS

Prices and specifications are subject to change without notice.

Typographical errors are subject to correction.

SECTION 02
FEED BINS

IN THIS CATALOG SECTION

PAGE NUMBER	CONTENTS
02-02	Bin Notes & Free-Flowing Material Notice
02-03	Lid Opener & Roof Choices
02-04	Bin Specifications
02-05 thru 02-06	Bin & Ladder Pricing
02-07	Tru-Lok Add-On Kits & Ladder Cages
02-08	Pneumatic Fill Options
02-09	Anchor Bolt Kits - Roof Vents - Miscellaneous Accessories
02-10	Anchor Bolt Kits - Taper Hopper Access Panels - 25" to 16" Extension Kits - Free Standing Transfer Hopper
02-11	Bin Extension Ring - Taper Hopper Repair Kits - Manual Slide Valves
02-12	16" Opening Attachments
02-13 thru 02-14	Model 506 - 6' Diameter Bins - Info & Component Requirements
02-15 thru 02-16	Model 507 - 7' Diameter Bins - Info & Component Requirements
02-17 thru 02-18	Model 509 - 9' Diameter Bins - Info & Component Requirements
02-19 thru 02-20	Model 512 - 12' Diameter Bins - Info & Component Requirements

RIGID AUGER

PAGE NUMBER	CONTENTS
02-21	Rigid Auger Length Determination Chart
02-22	4" & 6" Rigid Auger Capacities & Horsepower Requirements
02-23	Pulleys - V-Belts - Braces
02-24	Farm Duty Motors for Rigid Augers
02-25 thru 2-26	4" Rigid Auger Feed Delivery System Components
02-27 thru 2-28	6" Rigid Auger Feed Delivery System Components
02-29	Plastic Upper Boot Transitions

BIN REPAIRS

SEE REPAIR LISTING & REFERENCE MATERIAL IN SEPARATE PRODUCT MANUALS

WARRANTY & DISCLAIMERS

SEE CATALOG SECTION 01 TO REVIEW WARRANTY & DISCLAIMERS

BIN NOTES

- All 16" opening bins include Val-Co's exclusive 2-piece boot collar.
- Ladder safety cages are available - see pages 02-07.
- Boot collar is included with all 16" opening bins.
- Custom bin labels available with an annual purchase of 30 bins or more

IMPORTANT NOTICE

All bins are designed for the storage of free-flowing materials only.

Soybean meal, meat scraps, and certain other materials are not considered free-flowing and should not be stored in these bins.

Toll-free: 1-800-99VALCO
Phone: (+1) 419-678-8731
Fax: (+1) 419-678-2200

VAL-CO BIN OPENER & FILL OPTIONS

WAY-BACK
STANDARD LID OPENER

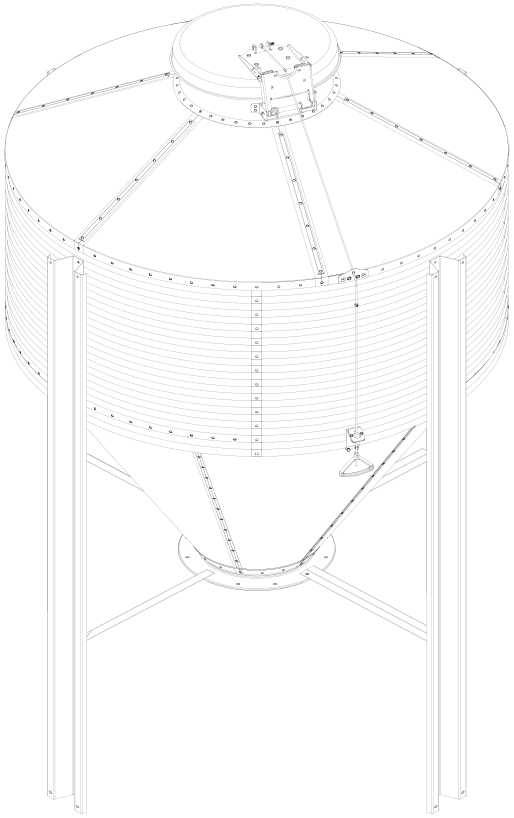

TRU-LOK
THIS IS AN OPTIONAL "ADD-ON" TO THE STANDARD WAY-BACK LID OPENER

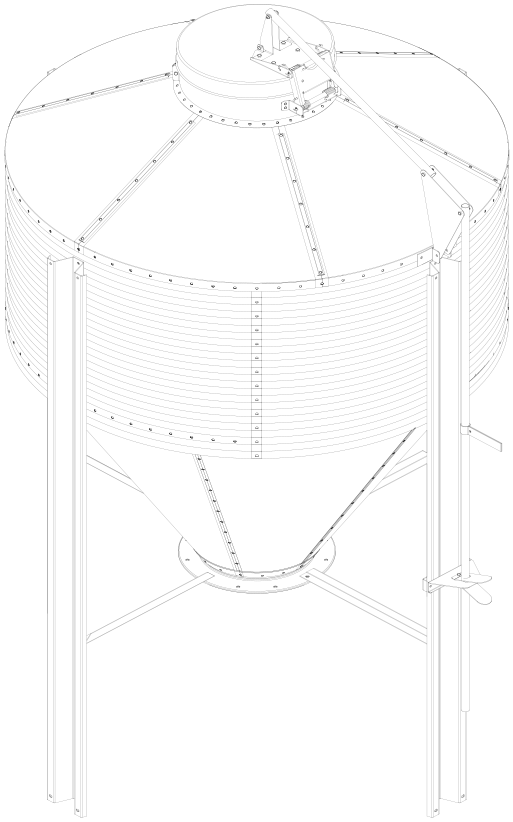

WITH PNEUMATIC FILL ROOF

BIN INCLUDES ONLY PREPUNCHED ROOF SECTIONS - ORDER PNEUMATIC FILL KIT & SIDE TUBE SEPARATELY

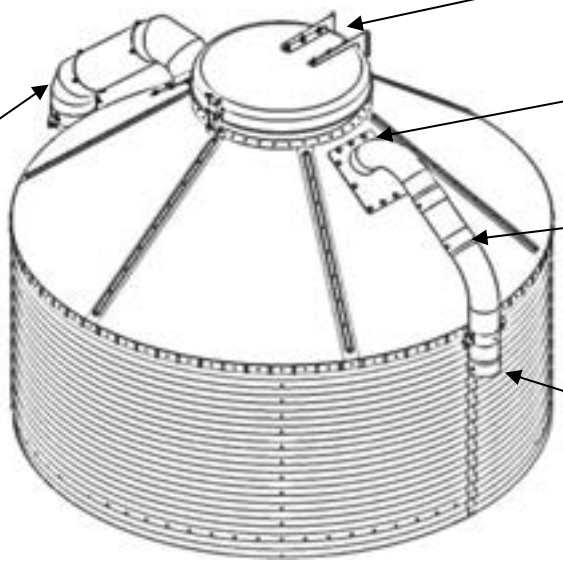

BIN LID OPENERS ARE NOT INCLUDED WITH PNEUMATIC FILL BIN

PREPUNCHED ROOF PANELS ARE INCLUDED WITH BIN FOR BOTH FILL & VENT TUBES

VENT TUBE IS NOT INCLUDED WITH BIN; IT IS INCLUDED WITH THE SEPARATELY ORDERED PNEUMATIC FILL KIT (ORDER PNEUMATIC FILL KIT FROM PAGE 02-08)

FILL TUBE IS NOT INCLUDED WITH BIN; IT IS INCLUDED WITH THE SEPARATELY ORDERED PNEUMATIC FILL KIT (ORDER PF KIT FROM PAGE 02-08)

SIDE FILL TUBE IS NOT INCLUDED WITH EITHER THE BIN OR SEPARATELY ORDERED PNEUMATIC FILL KIT - ORDER THIS TUBE SEPARATELY FROM PAGE 02-08

Toll-free: 1-800-99VALCO
Phone: (+1) 419-678-8731
Fax: (+1) 419-678-2200

WWW.VAL-CO.COM

6' - 7' - 9' - 12' DIAMETER FEED BIN SPECIFICATIONS

1.83m 2.13m 2.74m 3.66m

FEED BIN DIAMETER	NUMBER OF RINGS	APPROXIMATE CAPACITY (40#/CUBIC FT.)					FILL HEIGHT	
		2000 LB. TONS	METRIC TONS	CUBIC FEET	CUBIC METERS	BUSHELS	FEET	METERS
6' Dia. Weigh Bin 60º Taper Hopper **30º** Roof 16" Opening	1	2.68	2.43	134.0	3.79	108	10' 8"	3.03
	2	4.18	3.79	209.0	5.92	168	13' 4"	4.06
6' Diameter 60º Taper Hopper **40º** Roof 16" Opening	1	2.90	2.63	144.8	4.10	116	10' 11"	3.33
	2	4.40	4.00	220.2	6.24	177	13' 7"	4.14
	3	5.91	5.36	295.5	8.37	237	16' 3"	4.95
	4	7.42	6.73	370.9	10.50	298	18' 11"	5.77
7' Diameter 67º Taper Hopper 40º Roof 16" Opening Only	1	4.82	4.37	241.0	6.82	194	14' 7"	4.45
	2	6.87	6.23	343.5	9.73	276	17' 3"	5.26
	3	8.92	8.09	446.1	12.63	358	19' 11"	6.07
	4	10.97	9.95	548.7	15.54	441	22' 7"	6.88
	5	13.02	11.82	651.2	18.44	523	25' 3"	7.70
	6	15.08	13.68	753.8	21.34	606	27' 11"	8.51
9' Diameter 60º Taper Hopper 40º Roof 16" Opening	1	8.12	7.37	406.0	11.50	326	15' 6"	4.72
	2	11.51	10.44	575.6	16.30	463	18' 2"	5.54
	3	14.90	13.52	745.1	21.10	599	20' 10"	6.35
	4	18.29	16.60	914.7	25.90	735	23' 6"	7.16
	5	21.68	19.67	1084.2	30.70	871	26' 2"	7.98
	6	25.07	22.75	1253.7	35.50	1007	28' 10"	8.79
12' Diameter 60º Taper Hopper 40º Roof 16" Opening	1	17.32	15.72	866.2	24.53	696	19' 1"	5.82
	2	23.35	21.19	1167.6	33.06	938	21' 9"	6.63
	3	29.38	26.65	1469.1	41.60	1180	24' 5"	7.44
	4	35.41	32.12	1770.5	50.13	1423	27' 1"	8.26
	5	41.44	37.59	2071.9	58.67	1665	29' 9"	9.07
	6	47.47	43.06	2373.3	67.20	1907	32' 5"	9.88
	7	53.49	48.53	2674.7	75.74	2149	35' 1"	10.69

Updated:4/3/19

BIN NOTES

See important bin notes on page 02-02.

IMPORTANT NOTICE

All bins are designed for the storage of free-flowing materials only. Soybean meal, meat scraps, and certain other materials are not considered free-flowing and should not be stored in these bins.

Toll-free: 1-800-99VALCO
Phone: (+1) 419-678-8731
Fax: (+1) 419-678-2200

WWW.VAL-CO.COM

6' - 7' - 9' DIAMETER FEED BIN & LADDER PRICING

1.83m 2.13m 2.74m

6' DIAMETER BINS - 40º ROOF - 16" OPENING - 60º TAPER HOPPER

NUMBER OF RINGS	CATALOG NUMBER		FEED BIN			OPTIONAL LADDER			
	WAY-BACK OPENER	* PNEUMATIC FILL ROOF	SHIP WEIGHT LBS.	SHIP WEIGHT KGS.	FEED BIN LIST PRICE	CATALOG NUMBER	SHIP WEIGHT LBS.	SHIP WEIGHT KGS.	LADDER LIST PRICE
1	506W41	506741	458	208		506921	46	21	
2	506W42	506742	534	243		506922	55	25	
3	506W43	506743	612	278		506923	63	29	
4	506W44	506744	696	316		506924	72	33	

6' DIAMETER WEIGH BINS - 30º ROOF - 16" OPENING - 60º TAPER HOPPER

NUMBER OF RINGS	CATALOG NUMBER	SHIP WEIGHT		FEED BIN LIST PRICE	OPTIONAL LADDER			
	NO TOP LID (ROOF CAP INCLUDED)	LBS.	KGS.		CATALOG NUMBER	SHIP WEIGHT LBS.	SHIP WEIGHT KGS.	LADDER LIST PRICE
1	506301	450	205		506101	47	22	
2	506312	534	243		506102	56	26	

For feed scales, see catalog section 03.

7' DIAMETER BINS - 40º ROOF - 16" OPENING - 67º TAPER HOPPER

NUMBER OF RINGS	CATALOG NUMBER		SHIP WEIGHT		FEED BIN LIST PRICE	OPTIONAL LADDER			
	WAY-BACK OPENER	* PNEUMATIC FILL ROOF	LBS.	KGS.		CATALOG NUMBER	SHIP WEIGHT LBS.	SHIP WEIGHT KGS.	LADDER LIST PRICE
1	507W41	507741	722	328		507921	51	24	
2	507W42	507742	825	375		507922	60	28	
3	507W43	507743	972	441		507923	69	32	
4	507W44	507744	1076	489		507924	78	36	
5	507W45	507745	1302	591		507925	87	40	
6	507W46	507746	1406	638		507926	95	44	

9' DIAMETER BINS - 40º ROOF - 16" OPENING - 60º TAPER HOPPER

NUMBER OF RINGS	CATALOG NUMBER		SHIP WEIGHT		FEED BIN LIST PRICE	OPTIONAL LADDER			
	WAY-BACK OPENER	* PNEUMATIC FILL ROOF	LBS.	KGS.		CATALOG NUMBER	SHIP WEIGHT LBS.	SHIP WEIGHT KGS.	LADDER LIST PRICE
1	509W41	509741	1027	466		509921	61	28	
2	509W42	509742	1164	528		509922	69	32	
3	509W43	509743	1370	621		509923	78	36	
4	509W44	509744	1533	695		509924	87	40	
5	509W45	509745	1917	870		509925	96	44	
6	509W46	509746	2034	923		509926	105	48	

9' DIAMETER WEIGH BINS - 40º ROOF - 16" OPENING - 60º TAPER HOPPER

NUMBER OF RINGS	CATALOG NUMBER	SHIP WEIGHT		FEED BIN LIST PRICE	OPTIONAL LADDER			
	NO TOP LID (ROOF CAP INCLUDED)	LBS.	KGS.		CATALOG NUMBER	SHIP WEIGHT LBS.	SHIP WEIGHT KGS.	LADDER LIST PRICE
2	509352	1164	528		509922	69	32	
3	509353	1370	621		509923	78	36	
4	509354	1533	695		509924	87	40	
5	509355	1917	870		509925	96	44	

*PNEUMATIC FILL BINS

Pneumatic fill bins include top lid and roof panels for fill & vent tubes - pneumatic fill kit & fill tube are not included and must be ordered separately from page 02-08.

Toll-free: 1-800-99VALCO
Phone: (+1) 419-678-8731
Fax: (+1) 419-678-2200

12' DIAMETER FEED BIN & LADDER PRICING

12' DIAMETER BINS - 40º ROOF - 16" OPENING - 60º TAPER HOPPER

NUMBER OF RINGS	CATALOG NUMBER		SHIP WEIGHT		LIST PRICE	OPTIONAL LADDER			
	WAY-BACK OPENER	* PNEUMATIC FILL ROOF	LBS.	KGS.		CATALOG NUMBER	SHIP WEIGHT LBS.	SHIP WEIGHT KGS.	LIST PRICE
1	512W41	512741	2247	1020		512921	81	37	
2	512W42	512742	2422	1099		512922	90	41	
3	512W43	512743	2758	1252		512923	99	45	
4	512W44	512744	2998	1360		512924	108	49	
5	512W45	512745	3686	1672		512925	116	53	
6	512W46	512746	3965	1799		512926	125	57	
7	512W47	512747	4301	1951		512927	134	61	

*PNEUMATIC FILL BINS

Pneumatic fill bins include top lid and roof panels for fill & vent tubes - pneumatic fill kit & fill tube are not included and must be ordered separately from page 02-08.

BIN ACCESSORIES

OPTIONAL TRU-LOK OPENER ADD-ON KIT

FOR BIN SIZE	CATALOG NUMBER	SHIP WEIGHT LBS.	SHIP WEIGHT KGS.	LIST PRICE
6' x 1 Ring	570641	20.6	9.3	
6' x 2 Ring	570642	22.6	10.3	
6' x 3 Ring	570643	24.6	11.2	
6' x 4 Ring	570644	26.6	12.1	
7' x 1 Ring	570741	21.8	9.9	
7' x 2 Ring	570742	23.8	10.8	
7' x 3 Ring	570743	28.8	13.1	
7' x 4 Ring	570744	30.8	14.0	
7' x 5 Ring	570745	32.8	14.9	
7' x 6 Ring	570746	34.8	15.8	
9' x 1 Ring	570941	22.6	10.3	
9' x 2 Ring	570942	24.6	11.2	
9' x 3 Ring	570943	29.6	13.4	
9' x 4 Ring	570944	31.6	14.3	
9' x 5 Ring	570945	33.6	15.2	
9' x 6 Ring	570946	35.6	16.1	
12' x 1 Ring	571241	25.7	11.7	
12' x 2 Ring	571242	25.7	11.7	
12' x 3 Ring	571243	25.7	11.7	
12' x 4 Ring	571244	25.7	11.7	
12' x 5 Ring	571245	25.7	11.7	
12' x 6 Ring	571246	25.7	11.7	
12' x 7 Ring	571247	25.7	11.7	

Add-on to Way-Back Lid Opener.

OPTIONAL LADDER CAGE

See Ladder Cage Safety Standards Below

FOR BIN SIZE	CATALOG NUMBER	SHIP WEIGHT LBS.	SHIP WEIGHT KGS.	LIST PRICE
6' x 1 Ring	500971	69	31	
6' x 2 Ring	500972	99	45	
6' x 3 Ring	500973	121	55	
6' x 4 Ring	500974	145	66	
7' x 1 Ring	500972	99	45	
7' x 2 Ring	500973	121	55	
7' x 3 Ring	500974	145	66	
7' x 4 Ring	500975	145	66	
7' x 5 Ring	500976	193	87	
7' x 6 Ring	500977	216	98	
9' x 1 Ring	500972	99	45	
9' x 2 Ring	500973	121	55	
9' x 3 Ring	500974	145	66	
9' x 4 Ring	500975	145	66	
9' x 5 Ring	500976	193	87	
9' x 6 Ring	500977	216	98	
12' x 1 Ring	500973	121	55	
12' x 2 Ring	500974	145	66	
12' x 3 Ring	500975	145	66	
12' x 4 Ring	500976	193	87	
12' x 5 Ring	500977	216	98	
12' x 6 Ring	500978	240	109	
12' x 7 Ring	500979	264	120	

Ladder must be ordered separately.

LADDER CAGE SAFETY STANDARDS

When properly installed, the VAL-CO feed bin ladder cage meets the requirements of the following safety standards:

OSHA: 1926.1053
*OSHA/CAL: Article 4, §3277**
*ANSI A14.3**
ISO 14122-4

Notes:

**OSHA/CAL: 12 ft, 7 ring feed bin ladder exceeds maximum single ladder height*

**ANSI: 12 ft, 7 ring feed bin ladder exceeds maximum single ladder height*

Rung spacing, cage width, and spacing of verticals meet NZ/AUS 1657

Reference the Ladder Cage Manual for more information on installation. These standards cover areas of the world such as the United States, Canada, and Europe. The purchaser assumes the responsibility of verifying that the product meets desired safety standards, including local standards, and installing the ladder cage to meet those safety standards.

Toll-free: 1-800-99VALCO
Phone: (+1) 419-678-8731
Fax: (+1) 419-678-2200

PNEUMATIC FILL OPTIONS

PNEUMATIC FILL KITS

CATALOG NUMBER	ITEM DESCRIPTION	SHIP WEIGHT LBS.	SHIP WEIGHT KGS.	LIST PRICE
506640	Pneumatic Fill Kit - 6' Bin	31.2	14.2	
507640	Pneumatic Fill Kit - 7' Bin	33.8	15.3	
509640	Pneumatic Fill Kit - 9' Bin	38.2	17.3	
512640	Pneumatic Fill Kit - 12' Bin	50.8	23.0	

Hopper Reinforcement Angles are recommended on 12' bins, and required on bins with 4 or more rings - order separately below.

SIDE FILL TUBES

CATALOG NUMBER	ITEM DESCRIPTION	SHIP WEIGHT LBS.	SHIP WEIGHT KGS.	LIST PRICE
704441	4" x 4' Galv. Tube Only	11.0	5.0	
704411	4" x 7' Galv. Tube Only	20.0	9.1	
704412	4" x 11' Galv. Tube Only	36.0	16.3	
704413	4" x 15' Galv. Tube Only	48.0	21.8	
704414	4" x 19' Galv. Tube Only	48.0	21.8	
704287	4" Tube Joiner Only With Hardware	3.0	1.4	

See tube recommendations below for 6', 7', 9', and 12' Bins

SIDE FILL TUBE RECOMMENDATIONS

4" Tubes → (see above)	704441	704411	704412	704413	704414	704287
BIN SIZE	QUANTITY REQUIRED					
6' x 1 Ring		1				
6' x 2 Ring		1				
6' x 3 Ring			1			
6' x 4 Ring				1		
7' x 1 Ring			1			
7' x 2 Ring			1			
7' x 3 Ring				1		
7' x 4 Ring					1	
7' x 5 Ring					1	
7' x 6 Ring	1				1	1

4" Tubes → (see above above)	704441	704411	704412	704413	704414	704287
BIN SIZE	QUANTITY REQUIRED					
9' x 1 Ring			1			
9' x 2 Ring			1			
9' x 3 Ring				1		
9' x 4 Ring					1	
9' x 5 Ring					1	
9' x 6 Ring	1				1	1
12' x 1 Ring			1			
12' x 2 Ring				1		
12' x 3 Ring				1		
12' x 4 Ring					1	
12' x 5 Ring	1				1	1
12' x 6 Ring		1			1	1
12' x 7 Ring		1			1	1

Toll-free: 1-800-99VALCO
Phone: (+1) 419-678-8731
Fax: (+1) 419-678-2200

WWW.VAL-CO.COM

FEED BIN ACCESSORIES

FILL SYSTEM LIDS

CATALOG #	ITEM DESCRIPTION	SHIP WEIGHT LBS.	SHIP WEIGHT KG.	LIST PRICE
506088	Weigh Bin Discharge Cap with Weather Hood	28.9	13.2	
506280	Twin Fill System Bin Cap	45.0	20.5	
506291	Twin Bin CAP Roof Deck Angle (Needed if Bin Roof Deck Does Not have Reinforcement Angles) 6 Required for 6' and 7' Bins 9 Required for 9' Bins 12 Required for 12' Bins	1.4	0.7	

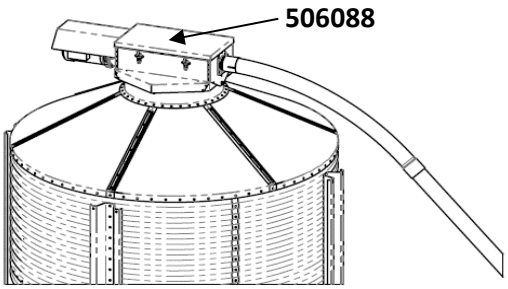

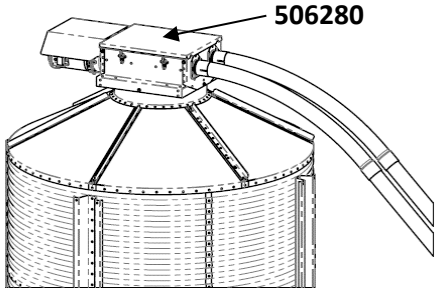

BIN ROOF VENTS

501396	Roof Vent Kit - 6' Bin	4.2	2.0	
501397	Roof Vent Kit - 7' Bin	6.8	3.1	
501398	Roof Vent Kit - 9' Bin	9.4	4.3	
501399	Roof Vent Kit - 12' Bin	12.6	5.8	

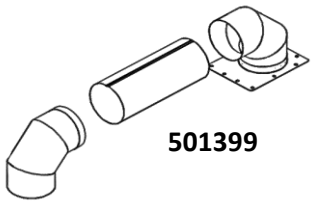

MISCELLANEOUS BIN ACCESSORIES

502003	Peek Thru Window	1.1	0.5	
500578	Bin Lifting Bracket Kit *DO NOT USE ON 12' BINS*	12.1	5.5	
500869	Way Back Bin Lid Adapter for Bin Opening 20-20.5"	9.0	4.1	
500868	Way Back Bin Lid with Adapter 500869	40.0	18.2	

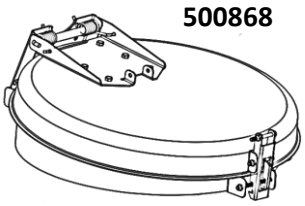

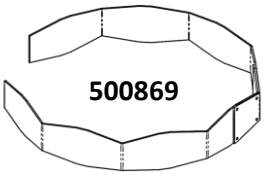

Toll-free: 1-800-99VALCO
Phone: (+1) 419-678-8731
Fax: (+1) 419-678-2200

WWW.VAL-CO.COM

FEED BIN ACCESSORIES

OPTIONAL ANCHOR BOLT KITS

CATALOG #	ITEM DESCRIPTION	SHIP WEIGHT LBS.	SHIP WEIGHT KG.	LIST PRICE
500220	Anchor Bolt Kit for 6' and 7' Diameter Bins	2.5	1.2	
500221	Anchor Bolt Kit for 9' Diameter Bins	4.0	1.9	
500388	Anchor Bolt Kit for 12' Diameter Bins	6.1	2.8	

25" TO 16" OPENING HOPPER EXTENSION KITS

509500	25" to 16" Opening Extension Kit With Boot Collar For Big "66", Big "99", Mini Bins and Other 60 Degree Taper Bins	30.0	13.7	
501180	25" to 16" Opening Extension Kit With Boot Collar - for 6' & 9' Bins	31.7	14.4	
501170	25" to 16" Opening Extension Kit Less Boot Collar - for 6' & 9' Bins	21.3	9.7	

Boot Safety Switch

730965	Boot Safety Switch - Mechanical 110-220v, 20 amp, 1 phase, 50-60hz	1.1	0.5	
455800	Boot Safety Switch Proximity switch, 0-60 sec. delay, adj. sensitivity, 1P/220v/50-60	4.0	1.8 0	

730965

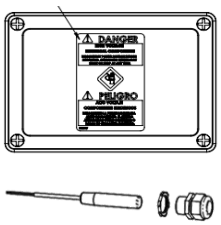

45580

Free Standing Transfer Hopper

500820	Free Standing Transfer Hopper - 300lb / 136Kg Capacity	70.0	31.8 0	
500840	Free Standing Transfer Hopper - Straight Out - 300lb / 136Kg Capacity	79.6	36.2 0	

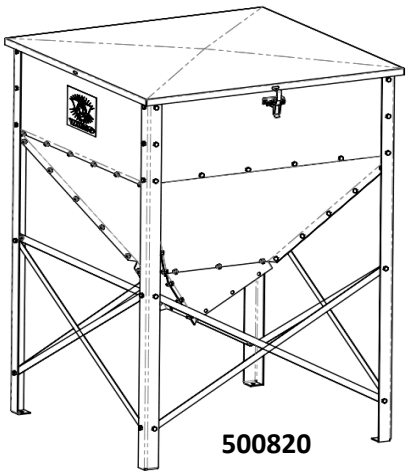

500820

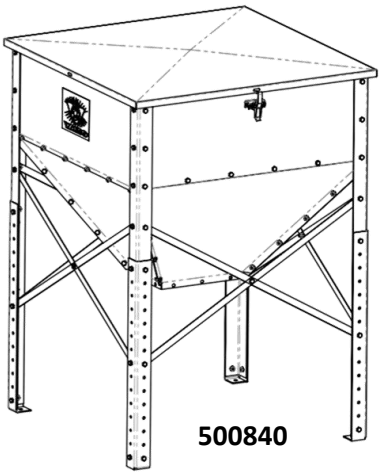

500840

Toll-free: 1-800-99VALCO
Phone: (+1) 419-678-8731
Fax: (+1) 419-678-2200

FEED BIN ACCESSORIES

BIN EXTENSION RINGS

CATALOG #	ITEM DESCRIPTION	SHIP WEIGHT LBS.	SHIP WEIGHT KG.	LIST PRICE
506090	1.50 ton 20 ga. Extension Ring With Hardware - 6' Bin	84.0	38.2	
507090	2.02 ton 20 ga. Extension Ring With Hardware - 7' Bin	94.0	42.7	
509090	3.40 ton 20 ga. Extension Ring With Hardware - 9' Bin	127.2	57.7	
509091	3.40 ton 18 ga. Extension Ring With Hardware - 9' Bin	163.2	74.1	
512090	6.71 ton 20 ga. Extension Ring With Hardware - 12' Bin	175.8	79.8	
512091	6.71 ton 14 ga. Extension Ring With Hardware - 12' Bin	335.8	152.4	
500191	Ladder Extension for 6', 7', 9' and 12' Bins	8.9	4.1	

Extension Rings and Ladder Extension are no longer available for Big "66" & "99" bins.

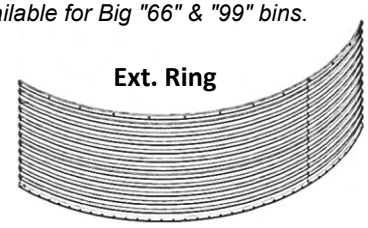

TAPER HOPPER REPAIR KITS

506250	6' Bin Taper Hopper Repair Kit	95.1	43.2	
507250	7' Bin Taper Hopper Repair Kit	202.1	91.7	
509250	9' Bin Taper Hopper Repair Kit	267.7	121.5	
512250	12' Bin Taper Hopper Repair Kit	0.0	0.0	
500250	Big "66" Bin Taper Hopper Repair Kit	95.4	43.3	

Each kit includes complete set of taper hopper sections for 16" opening bin (25" for Big "66")and includes hardware for installation.Boot collar is not included.

SLIDE VALVES

501190	Manual Slide Valve Assembly - 16"	22.5	10.2	
501570	Manual Slide Valve Loop Drive Assembly - 16"	12.5	5.7	
501997	Optional Rack & Pinion Crank Attachment for 501190 Slide Valve	8.0	3.7	
VB313	Winch Handle for 501570, 5' Long (for 9' Bins & Smaller)	5.0	2.3	
820172	Winch Handle Adjustable for 501570, 4-8FT LONG (for 12' BINS)	9.0	4.1	
500621	Taper Hopper Slide Valve	11.1	5.1	
500471	16" Boot Slide Valve Assy (plastic upper boot transition required for installation)	6.0	2.7	

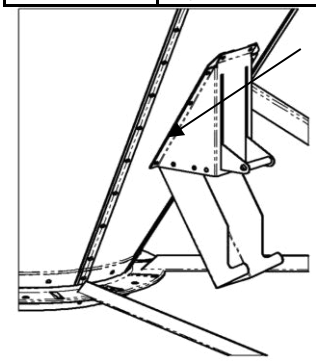

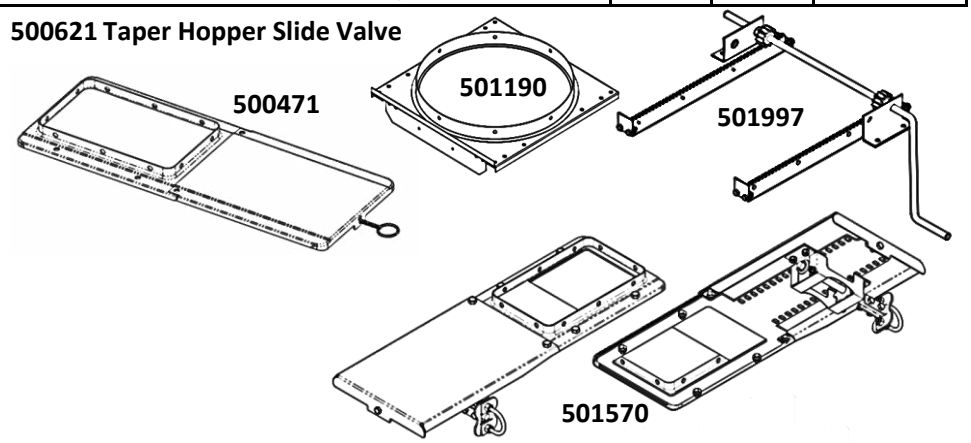

16" OPENING ATTACHMENTS

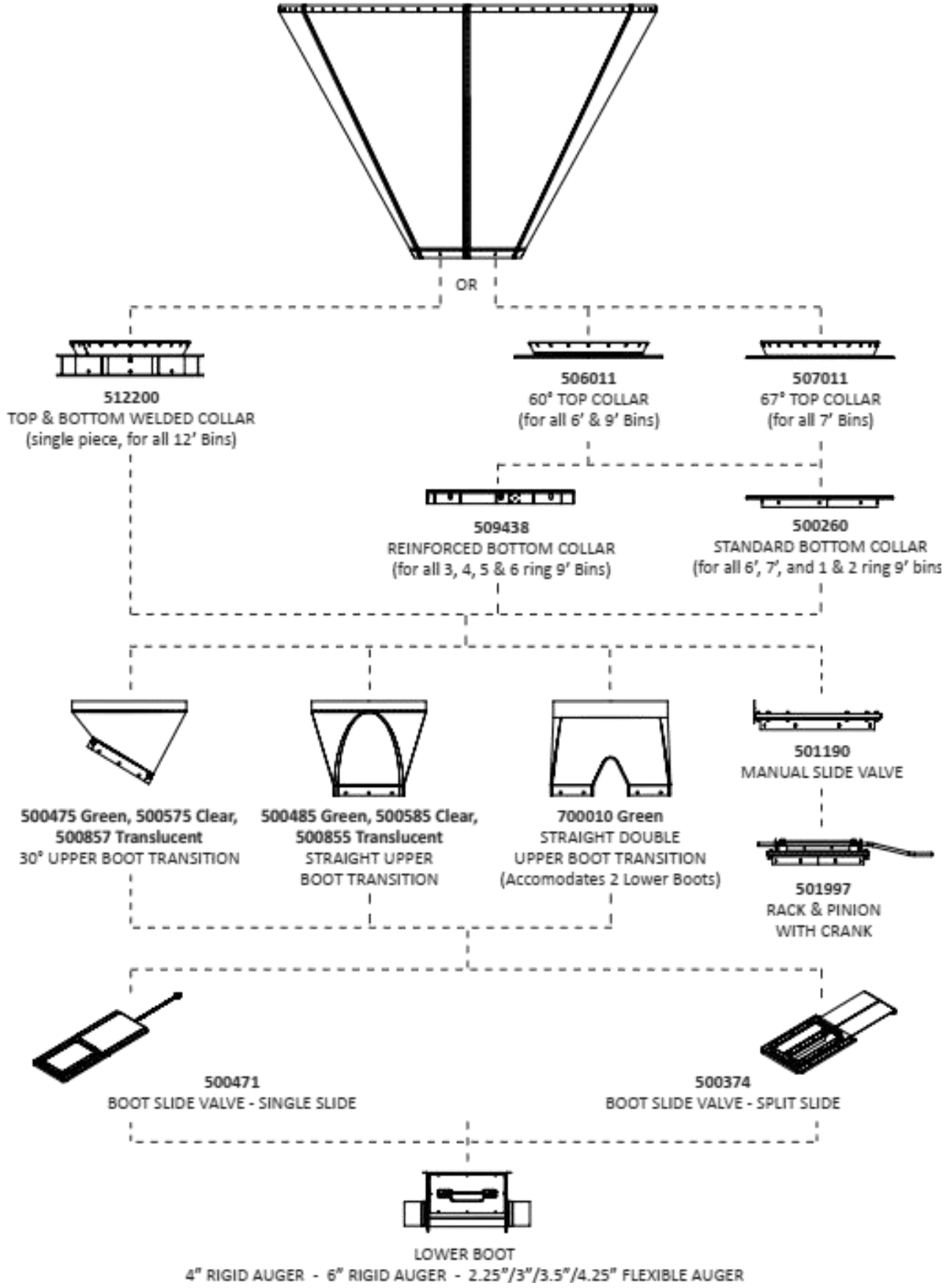

Toll-free: 1-800-99VALCO
Phone: (+1) 419-678-8731
Fax: (+1) 419-678-2200

MODEL 506 BIN - 6' DIAMETER

6' BIN DIMENSIONS

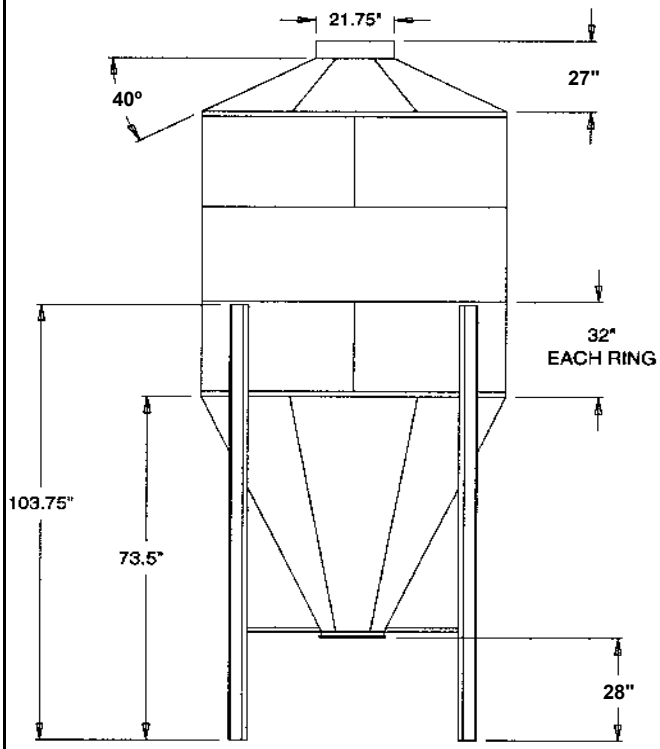

ANCHORING

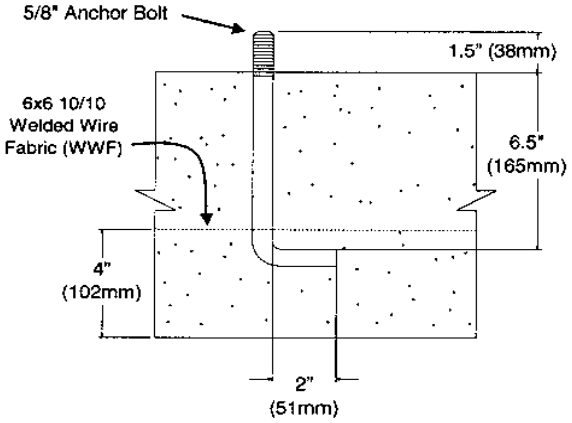

OPTIONAL ANCHOR BOLTS

Optional style anchor bolts as shown above are available. Order catalog number 500220 (page 02-09) for 6' bins.

When using this type of anchor bolt, the holes may be drilled after the foundation is set. However, the dimensions for locating the bolts must be held to maintain squareness of the bin.

NOTE: Locating the anchor bolts by using the asembled bin does not assure that the bin will be square and can result in damage to equipment and/or personal injury.

FOUNDATION SPECIFICATIONS

Soil with a bearing capacity of 3500 pounds per square foot (psf) is required for bin foundation. A qualified soil engineer should be consulted if any questions arise. All bin foundations must be smooth and level. All concrete must have a minimum compressive strength of 3000 psi in 28 days. Concrete requirements shown below should be increased by 25" to allow for waste.

6' BIN PADS

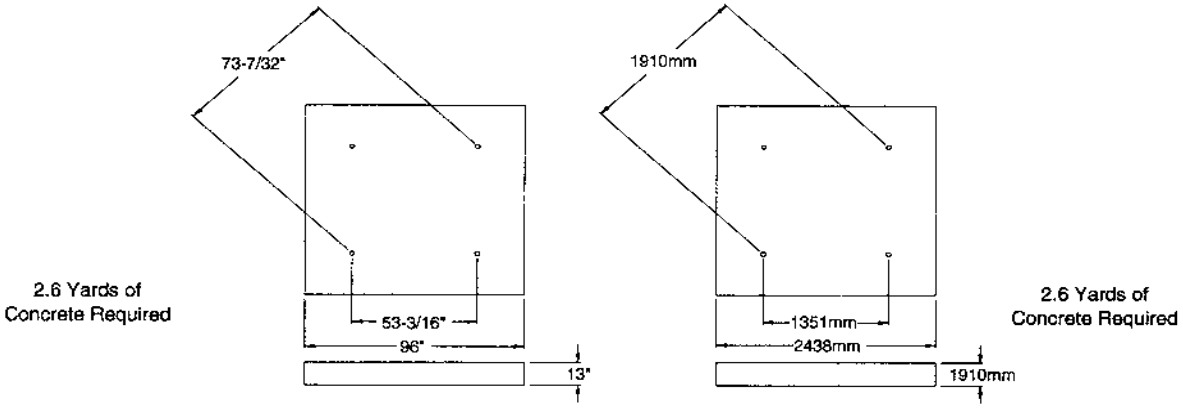

Toll-free: 1-800-99VALCO
Phone: (+1) 419-678-8731
Fax: (+1) 419-678-2200

WWW.VAL-CO.COM

MODEL 506 BIN - 6' DIAMETER
COMPONENTS REQUIREMENTS

6' DIAMETER BINS

			BIN SIZE & OPENING:			6' - 16" OPENING				6' - 16" OPENING				6' - 16"		6'
			OPENER TYPE:			WAY-BACK OPENER				PNEUMATIC FILL ROOF				WEIGH BIN		EXT
			NUMBER OF RINGS:			1	2	3	4	1	2	3	4	1	2	N/A
			ORDER NUMBER:			506W41	506W42	506W43	506W44	506741	506742	506743	506744	506301	506312	506090
CATALOG NUMBER		COMPONENT DESCRIPTION	LIST PRICE	SHIP WEIGHT LBS.	SHIP WEIGHT KGS.	QUANTITY REQUIRED				QUANTITY REQUIRED				QTY REQ'D		REQ'D
506009		20 ga. Main Hopper - Plain w/Drip Edge		40.0	18.2	1	2	2	2	1	2	2	2	1	2	0
506010		20 ga. Main Hopper - Decal w/Drip Edge		40.0	18.2	1	0	0	0	1	0	0	0	1	0	0
506007		20 ga. Extension Hopper - Plain		40.0	18.2	0	1	3	5	0	1	3	5	0	1	2
506008		20 ga. Extension Hopper - Decal		40.0	18.2	0	1	1	1	0	1	1	1	0	1	0
506024		Leg - 103.25"		38.0	17.3	4	4	4	4	4	4	4	4	4	4	0
506232		Leg-Collar Brace Angle		2.2	1.0	4	4	4	4	4	4	4	4	4	4	0
506423		Roof Deck Section 40º		9.5	4.4	6	6	6	6	4	4	4	4	0	0	0
506424		Roof Deck Section 40º - Pneumatic Fill		9.5	4.4	0	0	0	0	2	2	2	2	0	0	0
506023		Roof Deck Section 30º		7.3	3.4	0	0	0	0	0	0	0	0	6	6	0
506018		Taper Hopper Section - 16"		13.9	6.4	6	6	6	6	6	6	6	6	6	6	0
506160		Basic Hardware Carton		37.6	17.1	1	1	1	1	1	1	1	1	1	1	0
506072		Extension Hardware Carton		4.0	1.9	0	1	2	3	0	1	2	3	0	1	1
506171		Collar Carton		15.0	6.9	1	1	1	1	1	1	1	1	0	0	0
500650		Way-Back Lid Carton		32.0	14.6	1	1	1	1	0	0	0	0	0	0	0
500790		Lid Carton for Pneumatic Fill 40º		11.8	5.4	0	0	0	0	1	1	1	1	0	0	0
506088		Assembly Weigh Bin Discharge Cap w/ Weather Hood		28.9	13.2	0	0	0	0	0	0	0	0	1	1	0
506173		Collar Carton (Boot & Lid) 6' 30° Roof		15.0	6.9	0	0	0	0	0	0	0	0	1	1	0
OPTIONAL TRU-LOK ADD-ON	500775	Tru-Lok Accessory Carton 40º		10.8	4.9	1	1	1	1	1	1	1	1			
	506725	Tru-Lok Roof Tube - 6'		2.0	1.0	1	1	1	1	1	1	1	1			
	500226	Tru-Lok Basic Tube		5.0	2.3	1	1	1	1	1	1	1	1			
	500729	Tru-Lok Extension Tube		1.9	0.9	0	1	2	3	1	1	2	3			
OPTIONAL LADDER	500772	Basic Ladder 40º		36.3	16.5	1	1	1	1	1	1	1	1	1	1	
	500191	Extension Ladder		8.9	4.1	0	1	2	3	0	1	2	3	0	1	
	506034	Ladder Stand-Off Ring		2.7	1.3	1	1	1	1	1	1	1	1	1	1	
	506916	Roof Ladder 40º		7.2	3.3	1	1	1	1	1	1	1	1	1	1	
PNEUMATIC FILL OPTIONS	506640	Pneumatic Fill Kit - 6' Bin		31.2	14.2					1	1	1	1			
	704441	4" x 4' Galvanized Side Fill Tube		11.0	5.0					0	0	0	0			
	704411	4" x 7' Galvanized Side Fill Tube		20.0	9.1					1	1	0	0			
	704412	4" x 11' Galvanized Side Fill Tube		36.0	16.4					0	0	1	0			
	704413	4" x 15' Galvanized Side Fill Tube		48.0	21.8					0	0	0	1			
	704414	4" x 19' Galvanized Side Fill Tube		48.0	21.8					0	0	0	0			
	704287	4" Tube Joiner With Hardware		3.0	1.4					0	0	0	0			

FOR INDIVIDUAL REPAIR ITEMS FROM BUNDLES & CARTONS, PLEASE REFER TO PRODUCTMANUALS

Toll-free: 1-800-99VALCO
Phone: (+1) 419-678-8731
Fax: (+1) 419-678-2200

MODEL 507 BIN - 7' DIAMETER

7' BIN DIMENSIONS

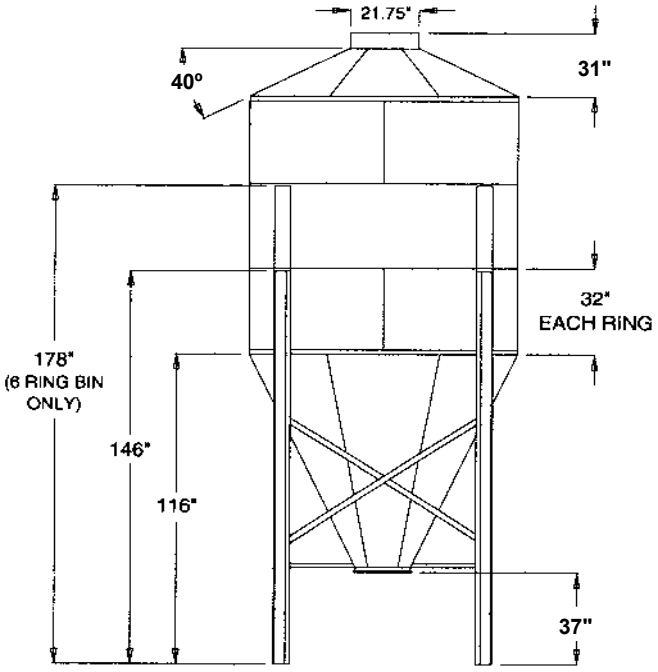

ANCHORING

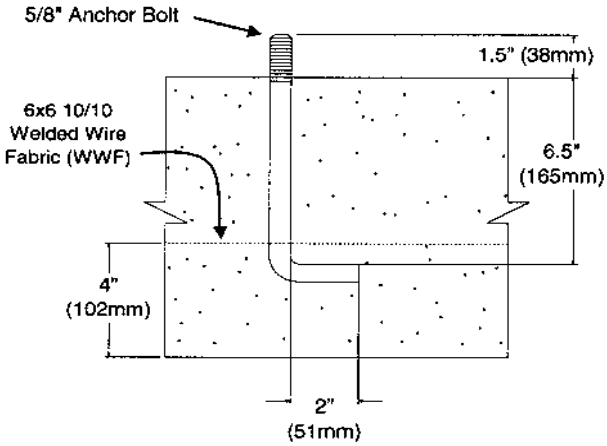

OPTIONAL ANCHOR BOLTS

Optional style anchor bolts as shown above are available. Order catalog number 500220 (page 02-09) for 7' bins.

When using this type of anchor bolt, the holes may be drilled after the foundation is set. However, the dimensions for locating the bolts must be held to maintain squareness of the bin.

NOTE: Locating the anchor bolts by using the asembled bin does not assure that the bin will be square and can result in damage to equipment and/or personal injury.

FOUNDATION SPECIFICATIONS

Soil with a bearing capacity of 3500 pounds per square foot (psf) is required for bin foundation. A qualified soil engineer should be consulted if any questions arise. All bin foundations must be smooth and level. All concrete must have a minimum compressive strength of 3000 psi in 28 days. Concrete requirements shown below should be increased by 25" to allow for waste.

7' BIN PADS

3.3 Yards of
Concrete Required

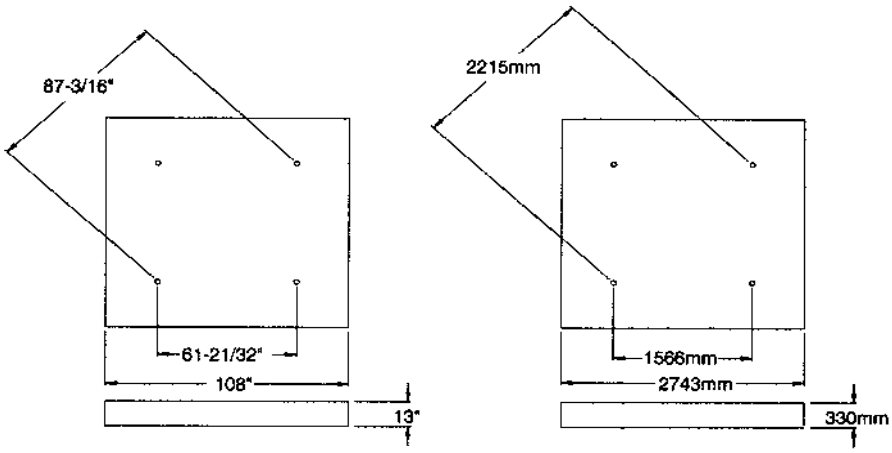

3.3 Yards of
Concrete Required

Toll-free: 1-800-99VALCO
Phone: (+1) 419-678-8731
Fax: (+1) 419-678-2200

MODEL 507 BIN - 7' DIAMETER COMPONENTS REQUIREMENTS

7' DIAMETER BINS

					BIN SIZE & OPENING:	7' - 16" OPENING						7' - 16" OPENING						7'
					OPENER TYPE:	WAY-BACK OPENER						PNEUMATIC FILL ROOF						EXT
					NUMBER OF RINGS:	1	2	3	4	5	6	1	2	3	4	5	6	N/A
					ORDER NUMBER:	507W41	507W42	507W43	507W44	507W45	507W46	507741	507742	507743	507744	507745	507746	507090
CATALOG NUMBER		COMPONENT DESCRIPTION	LIST PRICE	SHIP WEIGHT LBS.	SHIP WEIGHT KGS.	QUANTITY REQUIRED						QUANTITY REQUIRED						REQ'D
507046		18 ga. Main Hopper - Plain With Drip Edge		64.0	29.1	1	2	2	2	2	2	1	2	2	2	2	2	0
507047		18 ga. Main Hopper - Decal With Drip Edge		65.0	29.5	1	0	0	0	0	0	1	0	0	0	0	0	0
507016		18 ga. Main Hopper - Plain		64.0	29.1	0	0	0	0	2	2	0	0	0	0	2	2	0
507007		20 ga. Extension Hopper - Plain		50.0	22.7	0	1	3	5	5	7	0	1	3	5	5	7	2
507008		20 ga. Extension Hopper - Decal		50.0	22.7	0	1	1	1	1	1	0	1	1	1	1	1	0
507024		Galv. Leg - 146" (1-4R)		51.0	23.2	4	4	4	4	0	0	4	4	4	4	0	0	0
507039		Galv. Leg - 178" (5-6R)		64.0	29.1	0	0	0	0	4	4	0	0	0	0	4	4	0
507230		Front Cross Tie Brace Angle		5.9	2.7	4	4	4	4	0	0	4	4	4	4	0	0	0
507231		Rear Cross Tie Brace Angle		6.0	2.8	4	4	4	4	0	0	4	4	4	4	0	0	0
507232		Leg-Collar Brace Angle		2.6	1.2	4	4	4	4	4	4	4	4	4	4	4	4	0
507032		Brace Tie		5.0	2.3	0	0	0	0	8	8	0	0	0	0	8	8	0
507033		"X" Brace		4.9	2.3	0	0	0	0	8	8	0	0	0	0	8	8	0
509167		Special Bracing Hardware Bag		1.7	0.8	0	0	0	0	1	1	0	0	0	0	1	1	0
507423		Roof Deck Section 40º		13.0	5.9	6	6	6	6	6	6	4	4	4	4	4	4	0
507424		Roof Deck Section 40º - Pneumatic Fill		13.0	5.9	0	0	0	0	0	0	2	2	2	2	2	2	0
507018		Taper Hopper Section		31.0	14.1	6	6	6	6	6	6	6	6	6	6	6	6	0
507049		TH Reinforcement Angle		7.0	3.2	0	0	6	6	6	6	0	0	6	6	6	6	0
507160		Basic Hardware Carton		45.6	20.7	1	1	1	1	1	1	1	1	1	1	1	1	0
509163		178" Leg Hardware Carton		3.6	1.7	0	0	0	0	1	1	0	0	0	0	1	1	0
507072		Extension Hardware Carton		4.2	1.9	0	1	2	3	4	5	0	1	2	3	4	5	1
507171		Collar Carton		15.4	7.0	1	1	1	1	1	1	1	1	1	1	1	1	0
500650		Way-Back Lid Carton		32.0	14.6	1	1	1	1	1	1	0	0	0	0	0	0	0
500790		Lid Carton for Pneumatic Fill 40º		11.8	5.4	0	0	0	0	0	0	1	1	1	1	1	1	0
OPTIONAL TRU-LOK ADD-ON	500775	Tru-Lok Accessory Carton 40º		10.8	4.9	1	1	1	1	1	1							
	507727	Tru-Lok Roof Tube - 7' 40º		2.8	1.3	1	1	1	1	1	1							
	500226	Tru-Lok Basic Tube		5.0	2.3	1	1	1	1	1	1							
	500729	Tru-Lok Extension Tube		1.9	0.9	1	2	3	4	5	6							
	500728	Tru-Lok Tube Guide (3-6 Ring)		2.5	1.2	0	0	1	1	1	1							
OPTIONAL LADDER	500772	Basic Ladder 40º		36.3	16.5	1	1	1	1	1	1	1	1	1	1	1	1	
	500191	Extension Ladder		8.9	4.1	1	2	3	4	5	6	1	2	3	4	5	6	
	507034	Ladder Stand-Off Ring		3.2	1.5	1	1	1	1	1	1	1	1	1	1	1	1	
	507916	Roof Ladder 40º		9.4	4.3	1	1	1	1	1	1	1	1	1	1	1	1	
PNEUMATIC FILL OPTIONS	507640	Pneumatic Fill Kit - 7' Bin		33.8	15.4							1	1	1	1	1	1	
	704441	4" x 4' Galvanized Side Fill Tube		11.0	5.0							0	0	0	0	0	1	
	704411	4" x 7' Galvanized Side Fill Tube		20.0	9.1							0	0	0	0	0	0	
	704412	4" x 11' Galvanized Side Fill Tube		36.0	16.4							1	1	0	0	0	0	
	704413	4" x 15' Galvanized Side Fill Tube		48.0	21.8							0	0	1	0	0	0	
	704414	4" x 19' Galvanized Side Fill Tube		48.0	21.8							0	0	0	1	1	1	
	704287	4" Tube Joiner With Hardware		3.0	1.4							0	0	0	0	0	1	

FOR INDIVIDUAL REPAIR ITEMS FROM BUNDLES & CARTONS, PLEASE REFER TO PRODUCTMANUALS

Toll-free: 1-800-99VALCO
Phone: (+1) 419-678-8731
Fax: (+1) 419-678-2200

MODEL 509 BIN - 9' DIAMETER (40º ROOF)

9' BIN DIMENSIONS

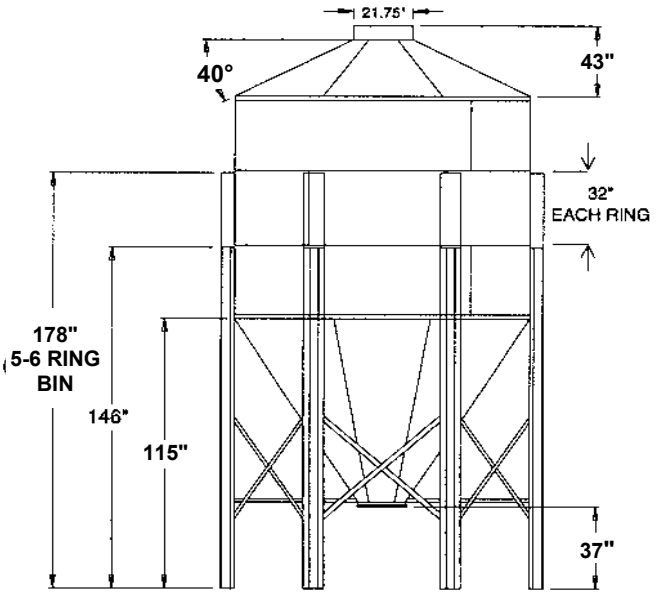

ANCHORING

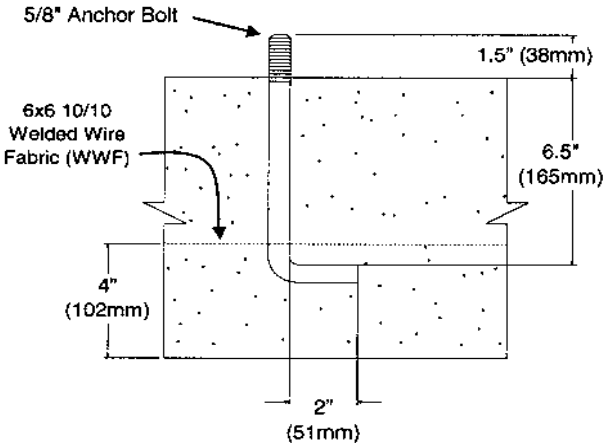

OPTIONAL ANCHOR BOLTS

Optional style anchor bolts as shown above are available. Order catalog number 500221 (page 02-09) for 9' bins.

When using this type of anchor bolt, the holes may be drilled after the foundation is set. However, the dimensions for locating the bolts must be held to maintain squareness of the bin.

NOTE: Locating the anchor bolts by using the asembled bin does not assure that the bin will be square and can result in damage to equipment and/or personal injury.

FOUNDATION SPECIFICATIONS

Soil with a bearing capacity of 3500 pounds per square foot (psf) is required for bin foundation. A qualified soil engineer should be consulted if any questions arise. All bin foundations must be smooth and level. All concrete must have a minimum compressive strength of 3000 psi in 28 days. Concrete requirements shown below should be increased by 25" to allow for waste.

9' BIN PADS

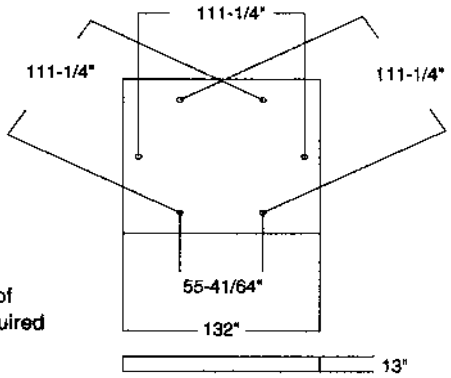

4.9 Yards of
Concrete Required

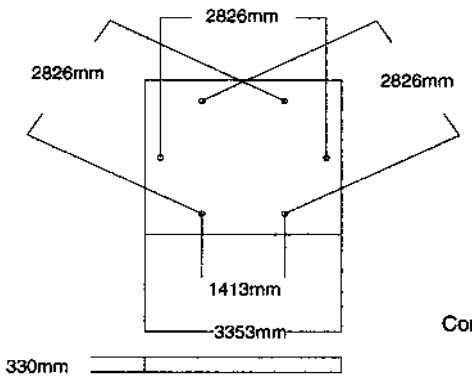

4.9 Yards of
Concrete Required

Toll-free: 1-800-99VALCO
Phone: (+1) 419-678-8731
Fax: (+1) 419-678-2200

MODEL 509 BIN - 9' DIAMETER (40º ROOF) COMPONENTS REQUIREMENTS

9' DIAMETER BINS

CATALOG NUMBER		COMPONENT DESCRIPTION	LIST PRICE	SHIP WEIGHT LBS.	SHIP WEIGHT KGS.	QUANTITY REQUIRED						QUANTITY REQUIRED						QTY REQ'D	
		BIN SIZE & OPENING:				9' - 16" OPENING						9' - 16" OPENING						9'	
		OPENER TYPE:				WAYBACK OPENER						PNEUMATIC						EXT	
		NUMBER OF RINGS:				1	2	3	4	5	6	1	2	3	4	5	6	N/A	N/A
		ORDER NUMBER:				509W41	509W42	509W43	509W44	509W45	509W46	509741	509742	509743	509744	509745	509746	509090	509091
509038		20 ga. Main Hopper - Plain w/Drip Edge		40.0	18.2	2	3	3	0	0	0	2	3	3	0	0	0	0	0
509039		20 ga. Main Hopper - Decal w/Drip Edge		40.0	18.2	1	0	0	0	0	0	1	0	0	0	0	0	0	0
509037		18 ga. Main Hopper - Plain w/Drip Edge		52.0	23.6	0	0	0	3	0	0	0	0	0	3	0	0	0	0
509011		18 ga. Main Hopper - Plain		52.0	23.6	0	0	0	0	3	3	0	0	0	0	3	3	0	0
509035		16 ga. Main Hopper - Plain w/Drip Edge		67.0	30.4	0	0	0	0	3	3	0	0	0	0	3	3	0	0
509008		20 ga. Extension Hopper - Plain		40.0	18.2	0	2	5	8	5	8	0	2	5	8	5	8	3	0
509009		20 ga. Extension Hopper - Decal		40.0	18.2	0	1	1	1	1	1	0	1	1	1	1	1	0	0
509014		18 ga. Extension Hopper - Plain		52.0	23.6	0	0	0	0	3	3	0	0	0	0	3	3	0	3
507024		Galv. Leg - 146" (1-4R)		51.0	23.2	6	6	6	6	0	0	6	6	6	6	0	0	0	0
507039		Galv. Leg - 178" (5-6R)		64.0	29.1	0	0	0	0	6	6	0	0	0	0	6	6	0	0
509230		Front Cross Tie Angle		5.4	2.5	6	6	6	6	0	0	6	6	6	6	0	0	0	0
509231		Rear Cross Tie Angle		5.4	2.5	6	6	6	6	0	0	6	6	6	6	0	0	0	0
509232		Leg-Collar Brace Angle		3.4	1.6	6	6	6	6	6	6	6	6	6	6	6	6	0	0
509032		Brace Tie		4.7	2.2	0	0	0	0	12	12	0	0	0	0	12	12	0	0
507033		"X" Brace		4.9	2.3	0	0	0	0	12	12	0	0	0	0	12	12	0	0
509167		Special Bracing Hardware Bag		1.7	0.8	0	0	0	0	1	1	0	0	0	0	1	1	0	0
509423		Roof Deck Section (40º Roof)		15.0	6.9	9	9	9	9	9	9	7	7	7	7	7	7	0	0
509424		Roof Deck Section - Pneumatic Fill 40º		14.7	6.7	0	0	0	0	0	0	2	2	2	2	2	2	0	0
509018		Taper Hopper Section 16"		32.0	14.6	9	9	9	9	9	9	9	9	9	9	9	9	0	0
509041		TH Reinforcement Angle		7.7	3.5	0	0	9	9	9	9	0	0	9	9	9	9	0	0
509160		Basic Hardware Carton		53.0	24.1	1	1	1	1	1	1	1	1	1	1	1	1	0	0
509059		Basic Caulking Carton		11.9	5.5	1	1	1	1	1	1	1	1	1	1	1	1	0	0
509163		178" Leg Hardware Carton		3.6	1.7	0	0	0	0	1	1	0	0	0	0	1	1	0	0
509072		Extension Hardware Carton		7.2	3.3	0	1	2	3	4	5	0	1	2	3	4	5	1	1
506171		Collar Carton		15.0	6.9	1	1	0	0	0	0	1	1	0	0	0	0	0	0
509440		Reinforced Collar Carton		25.0	11.4	0	0	1	1	1	1	0	0	1	1	1	1	0	0
500650		Way-Back Lid Carton		32.0	14.6	1	1	1	1	1	1	0	0	0	0	0	0	0	0
500790		Lid Carton for Pneumatic Fill 40º		11.8	5.4	0	0	0	0	0	0	1	1	1	1	1	1	0	0
OPTIONAL TRU-LOK ADD-ON	500775	Tru-Lok Accessory Carton		10.8	4.9	1	1	1	1	1	1								
	509727	Tru-Lok 40º Roof Tube - 9'		3.4	1.6	1	1	1	1	1	1								
	500226	Tru-Lok Basic Tube		5.0	2.3	1	1	1	1	1	1								
	500729	Tru-Lok Extension Tube		1.9	0.9	1	2	3	4	5	6								
	500728	Tru-Lok Tube Guide (3-6 Ring)		2.5	1.2	0	0	1	1	1	1								
OPTIONAL LADDER	500772	Basic Ladder - 40º Roof		36.3	16.5	1	1	1	1	1	1	1	1	1	1	1	1		
	500191	Extension Ladder		8.9	4.1	1	2	3	4	5	6	1	2	3	4	5	6		
	509034	Ladder Stand-Off Rail		3.0	1.4	1	1	1	1	1	1	1	1	1	1	1	1		
	509916	Roof Ladder - 40º Roof		12.1	5.6	1	1	1	1	1	1	1	1	1	1	1	1		
PNEUMATIC FILL OPTIONS	509640	Pneumatic Fill Kit - 9' Bin (40º Roof)		38.2	17.4							1	1	1	1	1	1		
	704441	4" x 4' Galvanized Side Fill Tube		11.0	5.0							0	0	0	0	0	1		
	704411	4" x 7' Galvanized Side Fill Tube		20.0	9.1							0	0	0	0	0	0		
	704412	4" x 11' Galvanized Side Fill Tube		36.0	16.4							1	1	0	0	0	0		
	704413	4" x 15' Galvanized Side Fill Tube		48.0	21.8							0	0	1	0	0	0		
	704414	4" x 19' Galvanized Side Fill Tube		48.0	21.8							0	0	0	1	1	1		
	704287	4" Tube Joiner With Hardware		3.0	1.4							0	0	0	0	0	1		

FOR INDIVIDUAL REPAIR ITEMS FROM BUNDLES & CARTONS, PLEASE REFER TO PRODUCTMANUALS

Toll-free: 1-800-99VALCO
Phone: (+1) 419-678-8731
Fax: (+1) 419-678-2200

MODEL 512 BIN - 12' DIAMETER

12' BIN DIMENSIONS

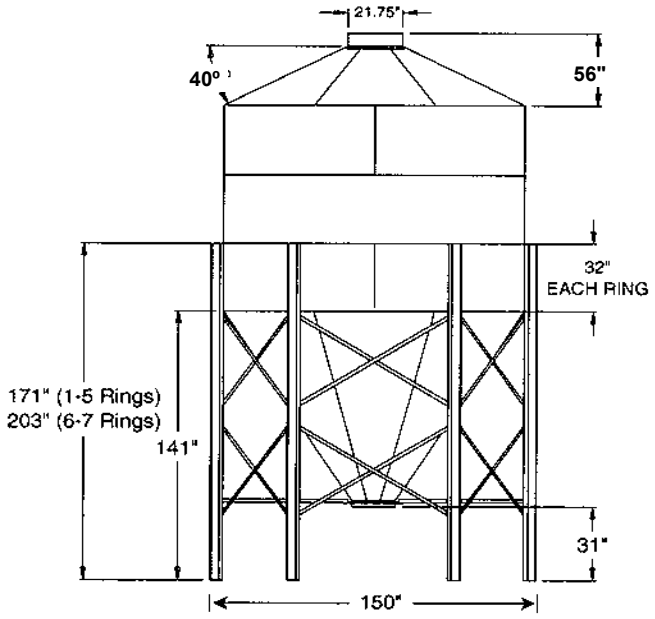

ANCHORING

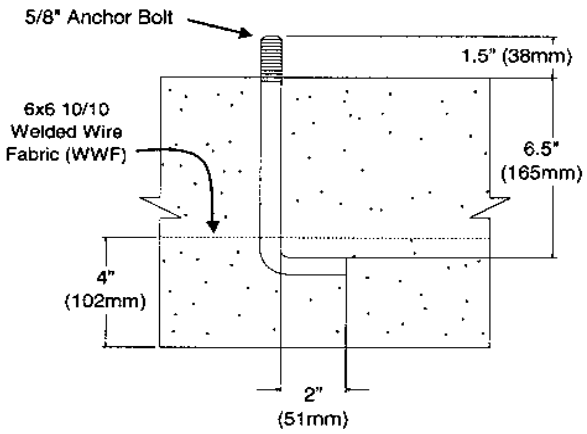

OPTIONAL ANCHOR BOLTS

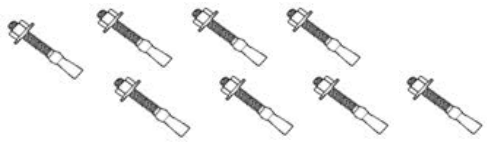

Optional style anchor bolts as shown above are available. Order catalog number 500388 (page 02-09) for 12' bins.

When using this type of anchor bolt, the holes may be drilled after the foundation is set. However, the dimensions for locating the bolts must be held to maintain squareness of the bin.

NOTE: Locating the anchor bolts by using the asembled bin does not assure that the bin will be square and can result in damage to equipment and/or personal injury.

FOUNDATION SPECIFICATIONS

Soil with a bearing capacity of 3500 pounds per square foot (psf) is required for bin foundation. A qualified soil engineer should be consulted if any questions arise. All bin foundations must be smooth and level. All concrete must have a minimum compressive strength of 3000 psi in 28 days. Concrete requirements shown below should be increased by 25" to allow for waste.

12' BIN PADS

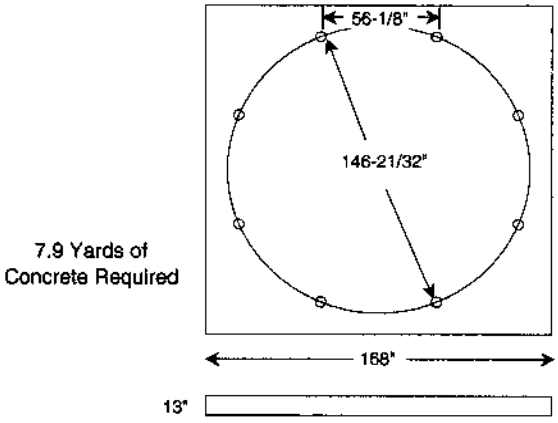

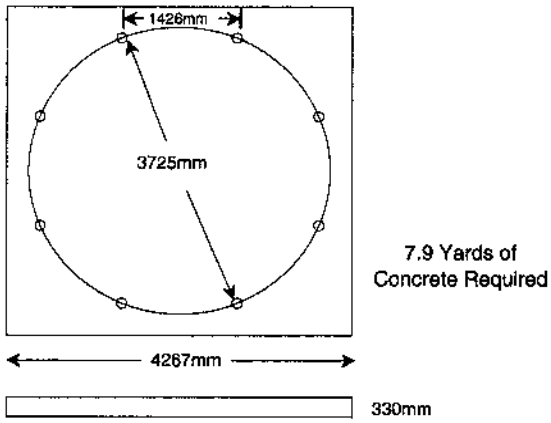

Toll-free: 1-800-99VALCO
Phone: (+1) 419-678-8731
Fax: (+1) 419-678-2200

WWW.VAL-CO.COM

MODEL 512 BIN - 12' DIAMETER
COMPONENTS REQUIREMENTS

12' DIAMETER BINS

CATALOG NUMBER		COMPONENT DESCRIPTION	LIST PRICE	SHIP WEIGHT LBS.	SHIP WEIGHT KGS.	QUANTITY REQUIRED							QUANTITY REQUIRED							QTY REQ'D	
BIN SIZE & OPENING:						12' - 16" OPENING							12' - 16" OPENING							12'	
OPENER TYPE:						WAYBACK OPENER							PNEUMATIC							EXT	
NUMBER OF RINGS:						1	2	3	4	5	6	7	1	2	3	4	5	6	7	N/A	N/A
ORDER NUMBER:						512w41	512W42	512W43	512W44	512W45	512W46	512W47	512741	512742	512743	512744	512745	512746	512747	512090	512091
512040		12 ga. Main Hopper - Plain w/Drip Edge		122.0	55.4	0	0	0	0	4	4	4	0	0	0	0	4	4	4	0	0
512038		14 ga. Main Hopper - Plain w/Drip Edge		82.0	37.2	3	4	4	4	0	0	0	3	4	4	4	0	0	0	0	0
512041		14 ga. Main Hopper - Decal w/Drip Edge		82.0	37.2	1	0	0	0	0	0	0	1	0	0	0	0	0	0	0	0
512037		14 ga. Main Hopper - Ext. & Leg		82.0	37.2	0	0	0	0	4	4	4	0	0	0	0	4	4	4	0	0
512011		18 ga. Main Hopper - Plain		52.0	23.6	0	0	4	0	4	4	4	0	0	4	0	4	4	4	0	0
512035		16 ga. Main Hopper - Ext.		68.0	30.9	0	0	0	4	0	4	4	0	0	0	4	0	4	4	0	0
512008		20 ga. Extension Hopper - Plain		42.0	19.1	0	3	3	7	7	7	7	0	3	3	7	7	7	7	4	0
512009		20 ga. Extension Hopper - Decal		42.0	19.1	0	1	1	1	1	1	1	0	1	1	1	1	1	1	0	0
512014		14 ga. Extension Hopper - Plain		82.0	37.2	0	0	0	0	0	0	4	0	0	0	0	0	0	4	0	4
512024		Galv. Leg - 12 ga. 170.88" (1-5R)		60.0	27.3	8	8	8	8	0	0	0	8	8	8	8	0	0	0	0	0
512039		Galv. Leg - 202.88" (6-7R)		111.0	50.4	0	0	0	0	8	8	8	0	0	0	0	8	8	8	0	0
512230		12 ga. Front Cross Tie Angle (1-7 Ring)		5.4	2.5	16	16	16	16	16	16	16	16	16	16	16	16	16	16	0	0
512231		12 ga. Rear Cross Tie Angle (1-7 Ring)		5.3	2.5	16	16	16	16	16	16	16	16	16	16	16	16	16	16	0	0
512232		12 ga. Leg-Collar Brace Angle		5.5	2.5	8	8	8	8	8	8	8	8	8	8	8	8	8	8	0	0
512423		20 ga. Roof Deck Section		20.0	9.1	12	12	12	12	12	12	12	10	10	10	10	10	10	10	0	0
512424		20 ga. Roof Deck Section - Pneum. Fill		19.6	8.9	0	0	0	0	0	0	0	2	2	2	2	2	2	2	0	0
512422		18 ga. Roof Stiffeners 40º		3.9	1.8	12	12	12	12	12	12	12	12	12	12	12	12	12	12	0	0
512018		14 ga. Taper Hopper Section 16"		62.0	28.2	12	12	12	12	12	12	12	12	12	12	12	12	12	12	0	0
512021		Taper Hopper Reinforcement Brace		10.0	4.6	0	0	12	12	12	12	12	0	0	12	12	12	12	12	0	0
512160		Basic Hardware Carton (1-7R)		82.0	37.2	1	1	1	1	1	1	1	1	1	1	1	1	1	1	0	0
512059		Basic Caulking Carton		16.3	7.5	1	1	1	1	1	1	1	1	1	1	1	1	1	1	0	0
512163		202.88" Leg Hardware Carton		5.9	2.7	0	0	0	0	1	1	1	0	0	0	0	1	1	1	0	0
512072		Extension Hardware Carton		7.8	3.6	0	1	2	3	4	5	6	0	1	2	3	4	5	6	1	1
512171		Collar Carton		49.5	17.3	1	1	1	1	1	1	1	1	1	1	1	1	1	1	0	0
500650		Way-Back Lid Carton		32.0	14.6	1	1	1	1	1	1	1	0	0	0	0	0	0	0	0	0
500790		Lid Carton for Pneumatic Fill 40º		11.8	5.4	0	0	0	0	0	0	0	1	1	1	1	1	1	1	0	0
OPTIONAL TRU-LOK ADD-ON	500775	Tru-Lok Accessory Carton		10.8	4.9	1	1	1	1	1	1	1									
	512727	Tru-Lok Roof Tube - 12'		2.4	1.1	1	1	1	1	1	1	1									
	500226	Tru-Lok Basic Tube		5.0	2.3	1	1	2	2	2	2	3									
	500729	Tru-Lok Extension Tube		1.9	0.9	2	3	0	1	2	3	0									
	500763	Tru-Lok Extension Coupler Tube		1.9	0.9	0	0	1	1	1	1	2									
	500728	Tru-Lok Tube Guide (3-6 Ring)		2.5	1.2	0	0	1	1	1	1	1									
OPTIONAL LADDER	512772	Basic Ladder		39.0	17.7	1	1	1	1	1	1	1	1	1	1	1	1	1	1		
	500191	Extension Ladder		8.9	4.1	2	3	4	5	6	7	8	2	3	4	5	6	7	8		
	512051	Ladder Stand-Off Rail		2.7	1.3	2	2	2	2	2	2	2	2	2	2	2	2	2	2		
	512916	Roof Ladder		19.0	8.7	1	1	1	1	1	1	1	1	1	1	1	1	1	1		
PNEUMATIC FILL OPTIONS	512640	Pneumatic Fill Kit - 12' Bin		50.8	23.1								1	1	1	1	1	1	1		
	704441	4" x 4' Galvanized Side Fill Tube		11.0	5.0								0	0	0	0	1	0	0		
	704411	4" x 7' Galvanized Side Fill Tube		20.0	9.1								0	0	0	0	0	1	1		
	704412	4" x 11' Galvanized Side Fill Tube		36.0	16.4								1	0	0	0	0	0	0		
	704413	4" x 15' Galvanized Side Fill Tube		48.0	21.8								0	1	1	0	0	0	0		
	704414	4" x 19' Galvanized Side Fill Tube		48.0	21.8								0	0	0	1	1	1	1		
	704287	4" Tube Joiner With Hardware		3.0	1.4								0	0	0	0	1	1	1		

FOR INDIVIDUAL REPAIR ITEMS FROM BUNDLES & CARTONS, PLEASE REFER TO PRODUCTMANUALS

Toll-free: 1-800-99VALCO
Phone: (+1) 419-678-8731
Fax: (+1) 419-678-2200

4" & 6" RIGID AUGER

To Order a Rigid Auger System:

Record what horizontal and vertical distance is required ad also what delivery rate is required for the application.
Use the chart on this page (02-21) to determine **Auger Length**, using known horizontal & vertical distances.
Use the chart on page (20-22) to choose what **Diameter Tube** (4" or 6"), **Horsepower**, and **RPM** is required for the application.
Follow the below actions to order complate system.

Action	Description	4" Page #	6" Page #
Choose	Motor, Pulley, and V-Belt	02-23 & 02-24	
Choose 1	Plastic Transition	02-29	
Choose 1	Lower Boot	02-26	02-28
Choose 1	Connection Kit	02-25	02-27
If needed	Auger Braces	02-23	
Choose 1	Auger and Tube Assembly	02-25	02-27
Choose 1	Discharge Head	02-25	02-27
	or		
Choose 1	Discharge Head and Auger Kit	02-25	02-27

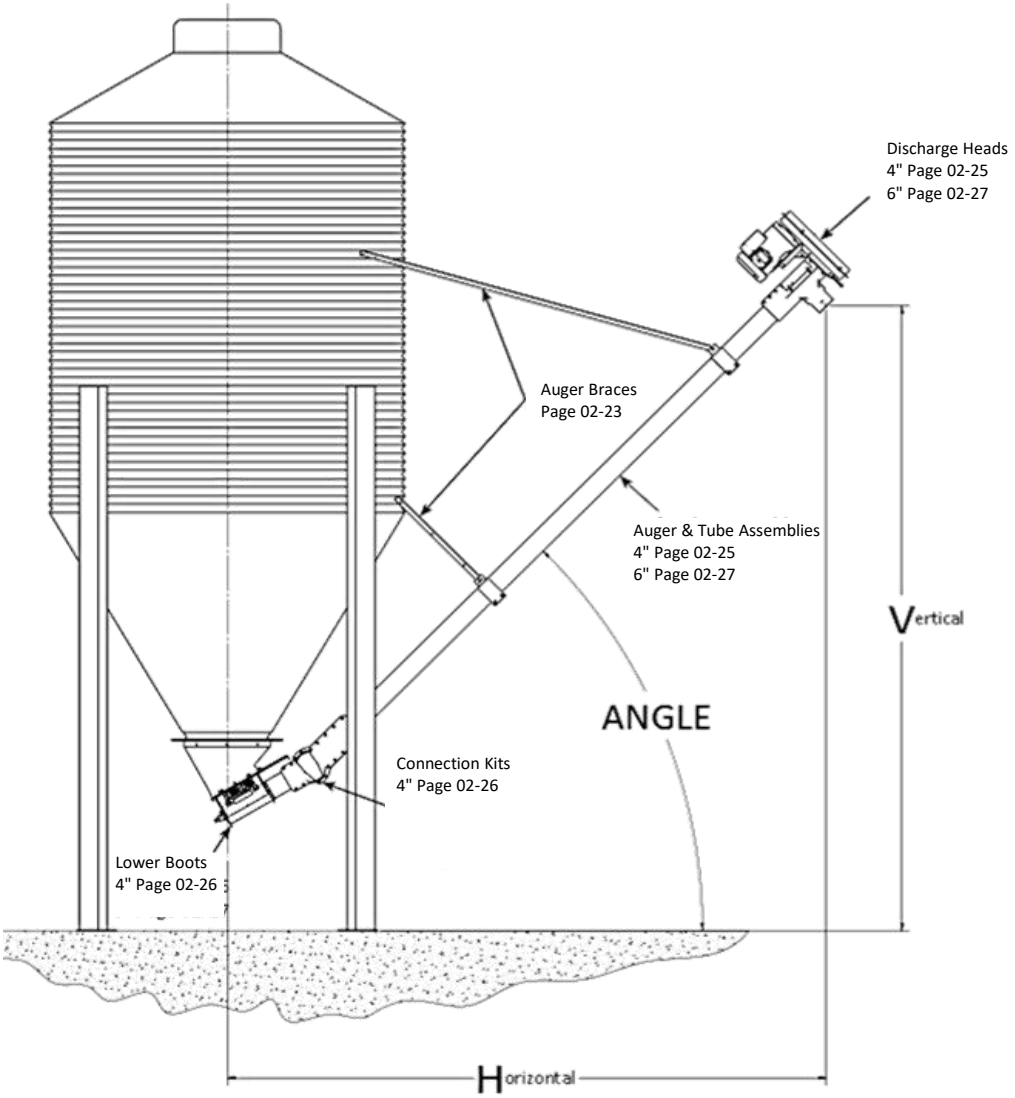

ANGLE OF ELEVATION	AUGER LENGTH													
	5 FT.		8 FT.		11 FT.		12 FT.		16 FT.		20 FT.		21 FT.	
	H	V	H	V	H	V	H	V	H	V	H	V	H	V
15º ANGLE	6' 4"	2' 8"	9' 2"	3' 6"	12' 1"	4' 3"	13' 1"	4' 6"	16' 11"	5' 7"	20' 10"	6' 7"	21' 9"	6' 10"
30º ANGLE	5' 11"	3' 11"	8' 7"	5' 5"	11' 2"	6' 11"	12' 0"	7' 5"	15' 6"	9' 5"	18' 11"	11' 5"	19' 10"	11' 11"
45º ANGLE	5' 4"	5' 0"	7' 5"	7' 2"	9' 7"	9' 3"	10' 3"	10' 0"	13' 1"	12' 10"	15' 11"	15' 8"	16' 7"	16' 4"

Toll-free: 1-800-99VALCO
Phone: (+1) 419-678-8731
Fax: (+1) 419-678-2200

4" & 6" RIGID AUGER CAPACITIES & HORSEPOWER REQUIREMENTS

4" RIGID AUGER CAPACITY & HORSEPOWER REQUIREMENT

DEGREE OF ELEVATION	AUGER SPEED (RPM)	APPROXIMATE CAPACITY LBS. PER HOUR	AUGER LENGTH - HORSEPOWER REQUIREMENT										
			4'	8'	10'	12'	16'	20'	25'	30'	35'	40'	50' - 100'
0° Horizontal	600	25,000	.5	.5	.5	.5	.75	.75	1	1	1.5	1.5	1.5 to 50'
	500	20,000	.5	.5	.5	.5	.5	.75	375	1	1	1.5	1.5 to 60'
	400	14,000	.5	.5	.5	.5	.5	.5	.75	.75	.75	1	1.5 to 75'
	300	9,000	.5	.5	.5	.5	.5	.5	.75	.75	.75	1	1.5 to 100'
30°	600	21,000	.5	.5	.75	.75	1	1.5	1.5	1.5			
	500	17,500	.5	.5	.5	.75	.75	1	1.5	1.5	1.5		
	400	13,500	.5	.5	.5	.5	.75	.75	1	1	1.5		
	300	9,000	.5	.5	.5	.5	.5	.5	.75	.75	1	1.5	
40°	600	21,000	.5	.5	.75	.75	1	1.5	1.5	1.5			
	500	15,500	.5	.5	.5	.5	.75	1	1	1.5	1.5		
	400	12,500	.5	.5	.5	.5	.5	.75	.75	.75	1		
	300	9,000	.5	.5	.5	.5	.5	.5	.75	.75	.75		
45° Maximum	600	14,500	.5	.5	.5	.75	1	1	1.5	1.5			
	500	12,000	.5	.5	.5	.5	.5	.75	.75	1	1		
	400	9,700	.5	.5	.5	.5	.5	.75	.75	1	1		
	300	7,500	.5	.5	.5	.5	.5	.5	.75	.75	.75		

6" RIGID AUGER CAPACITY & HORSEPOWER REQUIREMENT

DEGREE OF ELEVATION	AUGER SPEED (RPM)	APPROXIMATE CAPACITY LBS. PER HOUR	AUGER LENGTH - HORSEPOWER REQUIREMENT											
			6'	11'	16'	21'	30'	40'	50'	60'	70'	80'	90'	100'
0° Horizontal	600	67,500	.75	1	1.5	2	3	5	5	5				
	400	45,000	.75	1	1.5	2	3	3	5	5	5	5		
45° Maximum	600	47,000	.75	1.5	2	3	5							
	400	31,500	.75	1.5	1.5	2	3	5						

Toll-free: 1-800-99VALCO
Phone: (+1) 419-678-8731
Fax: (+1) 419-678-2200

PULLEYS - V BELTS - AUGER BRACES

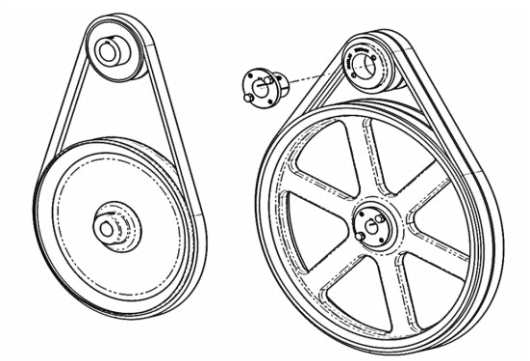

MOTOR PULLEYS

CATALOG #	ITEM DESCRIPTION	SHIP WEIGHT LBS.	SHIP WEIGHT KG.	LIST PRICE
920410	2.5" Single Groove "B" Motor Pulley - 5/8" Bore	1.0	0.5	
920411	3.6" Single Groove "B" Motor Pulley - 5/8" Bore	2.0	0.9	
920416	3.6" Single Groove "B" Motor Pulley - 7/8" Bore	2.0	0.9	
920412	3.6" Single Groove "B" Motor Pulley - 1-1/8" Bore	3.0	1.4	
920413	3.6" Double Groove "B" Motor Bushed Pulley (order bushing below for proper bore size)	3.0	1.4	
920414	5/8" Bore Split Taper Bushing for Double Groove Pulley	1.0	0.5	
920428	7/8" Bore Split Taper Bushing for Double Groove Pulley	1.0	0.5	
920415	1-1/8" Bore Split Taper Bushing for Double Groove Pulley	1.0	0.5	

V-BELTS

CATALOG #	ITEM DESCRIPTION	SHIP WEIGHT LBS.	SHIP WEIGHT KG.	LIST PRICE
920421	36" O.L. "B" Section V-Belt - 4" Auger at 600 rpm	1.0	0.5	
920429	38" O.L. "B" Section V-Belt - 4" Auger at 500 rpm	1.0	0.5	
920424	48" O.L. "B" Section V-Belt - 4" Auger at 400 rpm - 6" Auger at 600 rpm	1.0	0.5	
920425	55" O.L. "B" Section V-Belt - 4" Auger at 300 rpm - 6" Auger at 400 rpm	1.0	0.5	

AUGER BRACES

CATALOG #	ITEM DESCRIPTION	SHIP WEIGHT LBS.	SHIP WEIGHT KG.	LIST PRICE
501965	Regular Auger Brace Set (43.5" - 73.5") for Augers up to 12' Length	8.2	3.7	
501967	Additional Auger Brace Set (158") for Augers over 12' Length	17.0	7.7	
704078	Extra 4" Auger Brace Clamp Band (one clamp is included with the discharge head/motor mount)	1.1	0.5	
706031	Extra 6" Auger Brace Clamp Band (one clamp is included with the discharge head/motor mount)	1.2	0.5	

Most augers are supported by buildings or other structures and auger braces are not needed. If bracing is needed, on augers up to 12' length one set of auger braces is sufficient. For augers over 12' length an additional set of bracing is required to support the added weight & length. The above two lengths of braces are available; if longer braces are required they should be obtained locally using pipe, tubing or angle iron. One auger brace clamp is included with the discharge head/motor mount. Order an additional clamp band from above if needed.

Toll-free: 1-800-99VALCO
Phone: (+1) 419-678-8731
Fax: (+1) 419-678-2200

WWW.VAL-CO.COM

FARM DUTY MOTORS FOR RIGID AUGERS

CATALOG #	ITEM DESCRIPTION	SHIP WEIGHT LBS.	SHIP WEIGHT KG.	LIST PRICE
920401	.50 HP Farm Duty Motor - 110/220V 1PH 60HZ - 5/8" Shaft	24.0	10.9	
920402	.75 HP Farm Duty Motor - 110/220V 1PH 60HZ - 5/8" Shaft	27.0	12.2	
920403	1.0 HP Farm Duty Motor - 110/220V 1PH 60HZ - 5/8" Shaft	34.0	15.4	
920404	1.5 HP Farm Duty Motor - 110/220V 1PH 60HZ - 5/8" Shaft	44.0	20.0	
920405	2.0 HP Farm Duty Motor - 110/220V 1PH 60HZ - 7/8" Shaft	49.3	22.4	
920406	3.0 HP Farm Duty Motor - 110/220V 1PH 60HZ - 1-1/8" Shaft	75.0	34.0	
920407	5.0 HP Farm Duty Motor - 110/220V 1PH 60HZ - 1-1/8" Shaft	87.0	39.5	
920441	.50 HP Farm Duty Motor - 230/460V 3PH 60HZ - 5/8" Shaft	21.0	9.5	
920442	.75 HP Farm Duty Motor - 230/460V 3PH 60HZ - 5/8" Shaft	24.0	10.9	
920443	1.0 HP Farm Duty Motor - 230/460V 3PH 60HZ - 5/8" Shaft	26.0	11.8	
920444	1.5 HP Farm Duty Motor - 230/460V 3PH 60HZ - 5/8" Shaft	30.0	13.6	
920445	2.0 HP Farm Duty Motor - 208-230/460V 3PH 60HZ - 7/8" Shaft	35.0	15.9	
920446	3.0 HP Farm Duty Motor - 230/460V 3PH 60HZ - 1-1/8" Shaft	57.0	25.9	
920447	5.0 HP Farm Duty Motor - 230/460V 3PH 60HZ - 1-1/8" Shaft	74.0	33.6	
920551	.50 HP Farm Duty Motor - 110/220V 1PH 50HZ - 5/8" Shaft	21.0	9.5	
920552	.75 HP Farm Duty Motor - 110/220V 1PH 50HZ - 5/8" Shaft	23.0	10.4	
920553	1.0 HP Farm Duty Motor - 110/220V 1PH 50HZ - 5/8" Shaft	25.0	11.3	
920554	1.5 HP Farm Duty Motor - 110/220V 1PH 50HZ - 5/8" Shaft	30.0	13.6	
920555	2.0 HP Farm Duty Motor - 220V 1PH 50HZ - 1-1/8" Shaft	85.0	38.6	
920556	3.0 HP Farm Duty Motor - 220V 1PH 50HZ - 1-1/8" Shaft	32.1	14.6	
920557	5.0 HP Farm Duty Motor - 220V 1PH 50HZ - 1-1/8" Shaft	105.0	47.6	
920561	.50 HP Farm Duty Motor - 230/460:190/380V 3PH 50HZ - 5/8" Shaft	27.0	12.2	
920562	.75 HP Farm Duty Motor - 208-230/460:190/380V 3PH 50HZ - 5/8" Shaft	24.0	10.9	
920563	1.0 HP Farm Duty Motor - 208-230/460:190/380V 3PH 50HZ - 5/8" Shaft	30.0	13.6	
920564	1.5 HP Farm Duty Motor - 208-220/460:190/380V 3PH 50HZ - 5/8" Shaft	34.0	15.4	
920565	2.0 HP Farm Duty Motor - 208-220/460:190/380V 3PH 50HZ - 7/8" Shaft	30.0	13.6	
920566	3.0 HP Farm Duty Motor - 208-230/460:190/380V 3PH 50HZ - 1-1/8" Shaft	54.0	24.5	
920567	5.0 HP Farm Duty Motor - 208-230/460:190/380V 3PH 50HZ - 1-1/8" Shaft	63.0	28.6	

SEE CATALOG SECTION 20 FOR A COMPLETE DESCRIPTION OF ALL MOTORS

Toll-free: 1-800-99VALCO
Phone: (+1) 419-678-8731
Fax: (+1) 419-678-2200

4" RIGID AUGER FEED DELIVERY SYSTEM COMPONENTS

4" DISCHARGE HEAD (600 RPM) & AUGER ASSEMBLY

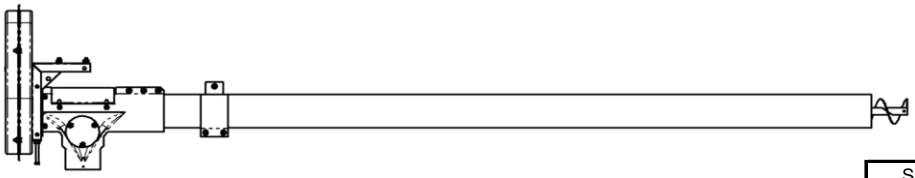

CATALOG #	ITEM DESCRIPTION	SHIP WEIGHT LBS.	SHIP WEIGHT KG.	LIST PRICE
704289	4" x 5' Auger & Tube With Discharge Head/Motor Mount	34.0	16.0	
704058	4" x 8' Auger & Tube With Discharge Head/Motor Mount	48.0	22.0	
704059	4" x 12' Auger & Tube With Discharge Head/Motor Mount	65.6	30.0	
704060	4" x 16' Auger & Tube With Discharge Head/Motor Mount	77.0	35.0	
704061	4" x 21' Auger & Tube With Discharge Head/Motor Mount	94.6	43.0	

The above auger assemblies include a 704272 discharge head/motor mount with 600 rpm driven pulley. Determine feed delivery capacity and horsepower requipment using the chart on page 02-22 and order a farm duty motor from page 02-24, a 2.5" motor pulley, the correct v-belt, and auger braces set(s) separately from page 02-23. If double groove pulley or 300/400/500 rpm auger speed is required, order separate components from page 02-25, below.

4" DISCHARGE HEADS

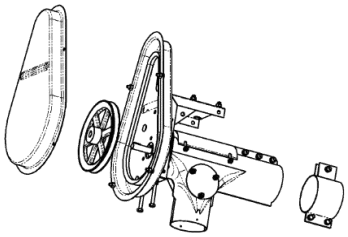

704272 shown for reference

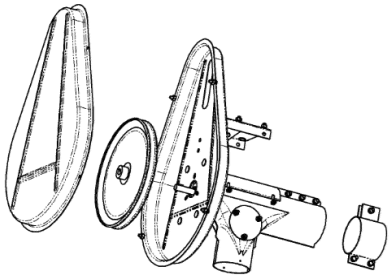

704270 shown for reference

CATALOG #	ITEM DESCRIPTION	SHIP WEIGHT LBS.	SHIP WEIGHT KG.	LIST PRICE
704272	4" Discharge Head/Motor Mount - Single Belt - 7.6" 600 RPM Pulley	21.8	9.9	
704271	4" Discharge Head/Motor Mount - Single Belt - 8.6" 500 RPM Pulley	22.0	10.0	
704270	4" Discharge Head/Motor Mount - Single Belt - 11.6" 400 RPM Pulley	23.0	10.4	
704269	4" Discharge Head/Motor Mount - Single Belt - 14.6" 300 RPM Pulley	24.0	10.9	

Order a farm duty motor from page 02-24; 2.5" motor pulley and correct size v-belt from page 02-23. See recommended horsepower requirement and approximate delivery capacities on page 02-22.

4" AUGER & TUBE ASSEMBLIES

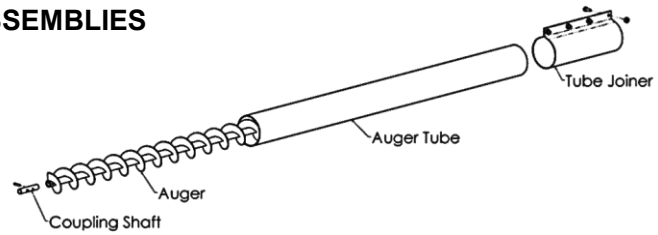

CATALOG #	ITEM DESCRIPTION	SHIP WEIGHT LBS.	SHIP WEIGHT KG.	LIST PRICE
704284	4" x 4' Extension Auger & Tube Assy	22.0	10.0	
704211	4" x 7' Extension Auger & Tube Assy	30.0	13.6	
704212	4" x 11' Extension Auger & Tube Assy	45.0	20.4	
704213	4" x 15' Extension Auger & Tube Assy	61.0	27.7	
704214	4" x 19' Extension Auger & Tube Assy	78.9	35.8	

Above include auger, tube, tube joiner, auger coupling shaft and all required hardware.

Toll-free: 1-800-99VALCO
Phone: (+1) 419-678-8731
Fax: (+1) 419-678-2200

WWW.VAL-CO.COM

4" RIGID AUGER FEED DELIVERY SYSTEM COMPONENTS

4" RIGID AUGER LOWER BOOT & CONNECTION KITS

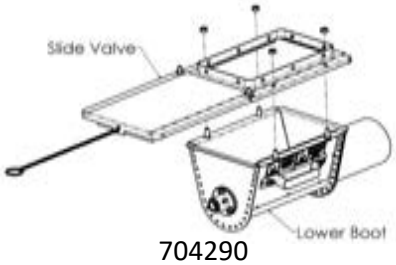

704290

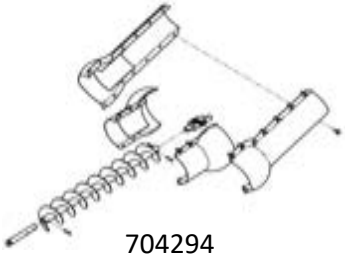

704294

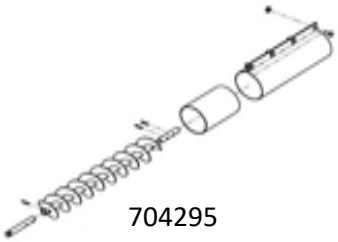

704295

CATALOG #	ITEM DESCRIPTION	SHIP WEIGHT LBS.	SHIP WEIGHT KG.	LIST PRICE
704290	4" Rigid Auger Lower Boot With Slide Valve	16.2	7.4	
704294	4" Universal Parts Adjustable Auger Connection Kit	10.2	4.7	
704295	4" Straight-Out Non-Adjustable Auger Connection Kit	8.2	3.8	

To order a complete 4" rigid auger boot for 16" bin opening, select a plastic upper boot transition from above. Then select the 704290 lower boot and your choice of either a 704294 adjustable auger connection kit or a 704295 non-adjustable auger connection kit. The adjustable auger connection kit allows for 10º - 50º auger adjustment when used with a 30º plastic upper boot transition. The non-adjustable auger connection kit sets the auger at the same angle as the selected plastic upper boot transition.

4" AUGERS & TUBES ONLY

CATALOG #	ITEM DESCRIPTION	SHIP WEIGHT LBS.	SHIP WEIGHT KG.	LIST PRICE
704281	4" x 4' Auger Only	6.0	2.7	
704069	4" x 7' Auger Only	11.0	5.0	
704070	4" x 11' Auger Only	17.0	7.7	
704071	4" x 15' Auger Only	22.0	10.0	
704072	4" x 19' Auger Only	27.0	12.2	
704441	4" x 4' Galvanized Tube Only	11.0	5.0	
704411	4" x 7' Galvanized Tube Only	20.0	9.1	
704412	4" x 11' Galvanized Tube Only	36.0	16.3	
704413	4" x 15' Galvanized Tube Only	48.0	21.8	
704414	4" x 19' Galvanized Tube Only	48.0	21.8	

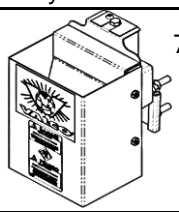

720097

4" AUGER ACCESSORIES

CATALOG #	ITEM DESCRIPTION	SHIP WEIGHT LBS.	SHIP WEIGHT KG.	LIST PRICE
704278	Coupling Shaft Only With Pins	0.1	0.1	
704287	Tube Joiner Only With Hardware	3.0	1.4	
704285	Coupling Shaft & Tube Joiner With Pins & Hardware	3.9	1.8	
704078	Tube Clamp Band & Hanger Assy	1.1	0.5	
704243	Receiving Hopper With Hinged Lid	28.0	12.7	
704420	4" ID Flexible Rubber Downspout Tube - 25' Roll	26.3	11.9	
735431	Downspout SS Connector Clamp	0.1	0.0	
720097	Hopper Level Switch - Adjustable Sensitivity	4.8	2.2	

6" RIGID AUGER FEED DELIVERY SYSTEM COMPONENTS

6" DISCHARGE HEAD (600RPM) & AUGER ASSEMBLY

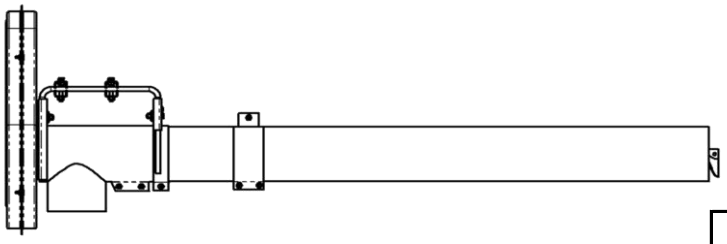

CATALOG #	ITEM DESCRIPTION	SHIP WEIGHT LBS.	SHIP WEIGHT KG.	LIST PRICE
706168	6" X 6' Auger & Tube With Discharge Head/Motor Mount	65.0	30.0	
706061	6" X 11' Auger & Tube With Discharge Head/Motor Mount	96.5	44.0	
706062	6" X 16' Auger & Tube With Discharge Head/Motor Mount	129.5	59.0	
706063	6" X 21' Auger & Tube With Discharge Head/Motor Mount	162.5	74.0	
706106	Motor Mount Adapter Plate for Motors Over 2.0 HP	2.0	1.0	

The above auger assemblies include a 706165 discharge head/motor mount with 600 rpm driven pulley. Determine feed delivery capacity and horsepower requipment using the chart on page 02-22 and order a farm duty motor from page 02-24, a 3.6" motor pulley, the correct v-belt, and auger braces set(s) separately from page 02-23. If double groove pulley or 400 rpm auger speed is required, order separate components from page 02-27, below.

6" DISCHARGE HEAD

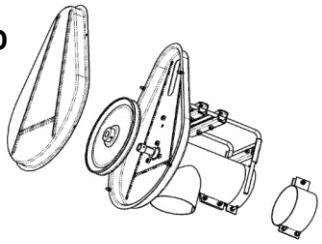

706165 shown for reference

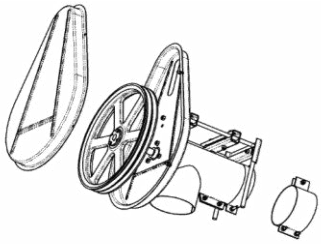

706172 shown for reference

CATALOG #	ITEM DESCRIPTION	SHIP WEIGHT LBS.	SHIP WEIGHT KG.	LIST PRICE
706165	6" Discharge Head/Motor Mount - Single Belt - 10.6" 600 RPM Pulley	32.5	14.8	
706166	6" Discharge Head/Motor Mount - Single Belt - 14.6" 400 RPM Pulley	0.0	0.0	
706171	6" Discharge Head/Motor Mount - Double Belt - 10.6" 600 RPM Pulley	37.6	17.0	
706172	6" Discharge Head/Motor Mount - Double Belt - 14.6" 400 RPM Pulley	0.0	0.0	
706106	Motor Mount Adapter Plate for 182/184 Frame Motor	2.0	0.9	

Order a farm duty motor from page 02-24; 3.6" motor pulley and correct size v-belt from page 02-23. See recommended horsepower requirement and approximate delivery capacities on page 02-22.

6" AUGER & TUBE ASSEMBLIES

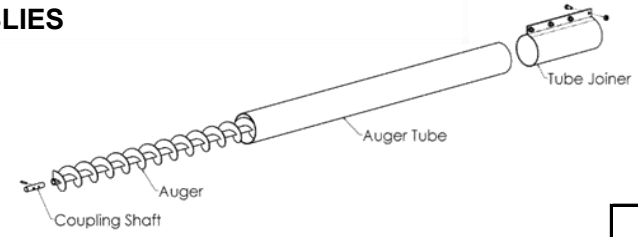

CATALOG #	ITEM DESCRIPTION	SHIP WEIGHT LBS.	SHIP WEIGHT KG.	LIST PRICE
706125	6" x 5' Extension Auger & Tube Assy	38.0	17.2	
706130	6" x 10' Extension Auger & Tube Assy	70.0	31.7	
706135	6" x 15' Extension Auger & Tube Assy	103.0	46.7	
706140	6" x 20' Extension Auger & Tube Assy	136.0	61.7	

Above include auger, tube, tube joiner, auger coupling shaft and all required hardware.

6" RIGID AUGER FEED DELIVERY SYSTEM COMPONENTS

6" RIGID AUGER LOWER BOOT & CONNECTION KITS

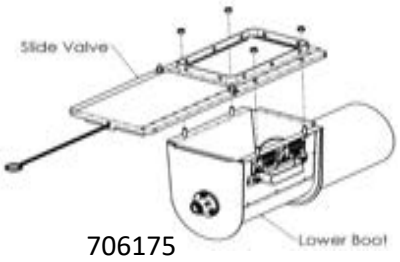

706175

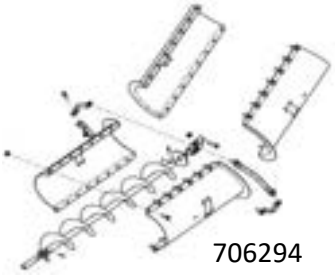

706294

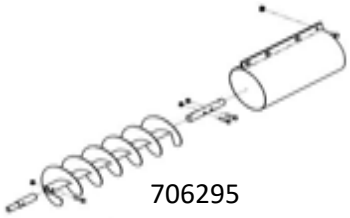

706295

CATALOG #	ITEM DESCRIPTION	SHIP WEIGHT LBS.	SHIP WEIGHT KG.	LIST PRICE
706175	6" Rigid Auger Lower Boot With Slide Valve	15.9	7.3	
706294	6" Universal Parts Adjustable Auger Connection Kit	20.0	9.1	
706295	6" Non-Adjustable Auger Connection Kit	10.3	4.7	

To order a complete 6" rigid auger boot for 16" bin opening, select a plastic upper boot transition from above. Then select the 706175 lower boot and your choice of either a 706294 adjustable auger connection kit or a 706295 non-adjustable auger connection kit. The adjustable auger connection kit allows for 10º - 50º auger adjustment when used with a 30º plastic upper boot transition. The non-adjustable auger connection kit sets the auger at the same angle as the selected plastic upper boot transition.

6" AUGER & TUBES ONLY

CATALOG #	ITEM DESCRIPTION	SHIP WEIGHT LBS.	SHIP WEIGHT KG.	LIST PRICE
706126	6" x 5' Auger Only	11.0	5.0	
706131	6" x 10' Auger Only	22.0	10.0	
706136	6" x 15' Auger Only	34.0	15.4	
706141	6" x 20' Auger Only	46.0	20.9	
706127	6" x 5' Galvanized Tube Only	21.0	9.5	
706411	6" x 10' Galvanized Tube Only	42.0	19.1	
706410	6" x 15' Galvanized Tube Only	63.0	28.6	
706409	6" x 20' Galvanized Tube Only	84.0	38.1	

6" AUGER ACCESSORIES

CATALOG #	ITEM DESCRIPTION	SHIP WEIGHT LBS.	SHIP WEIGHT KG.	LIST PRICE
706164	Coupling Shaft Only With Hardware	0.8	0.4	
706084	Tube Joiner Only With Hardware	4.2	1.9	
706169	Coupling Shaft & Tube Joiner With Pins & Hardware	6.0	2.7	
706031	Tube Clamp Band & Hanger Assy	1.2	0.5	
706150	Receiving Hopper With Hinged Lid	0.0	0.0	
706420	Downspout SS Connector Clamp	0.0	0.0	
720097	Hopper Level Switch - Adjustable Sensitivity	4.8	2.2	

UPPER BOOT TRANSITIONS

UPPER BOOT TRANSITIONS

CATALOG #	ITEM DESCRIPTION	SHIP WEIGHT LBS.	SHIP WEIGHT KG.	LIST PRICE
500475	30º Plastic Upper Boot Transition - Green	4.9	2.3	
500857	30º Plastic Upper Boot Transition - Semi-Translucent	4.4	2.0	
500575	30º Plastic Upper Boot Transition - Clear	4.6	2.1	
500485	Straight Single Plastic Upper Boot Transition - Green	5.5	2.5	
500855	Straight Single Plastic Upper Boot Transition - Semi-Translucent	5.6	2.6	
500585	Straight Single Plastic Upper Boot Transition - Clear	4.8	2.2	
500850	Straight Triple Boot Transition - Metal	55.6	25.3	
700010	Straight Double Plastic Upper Boot Transition - Green	7.0	3.2	
501480	7.5º Transition Wedge Assembly Kit	2.9	1.4	
501470	15º Transition Wedge Assembly Kit (can be used in conjuction with 30º Boot to achieve 45º)	4.4	2.0	

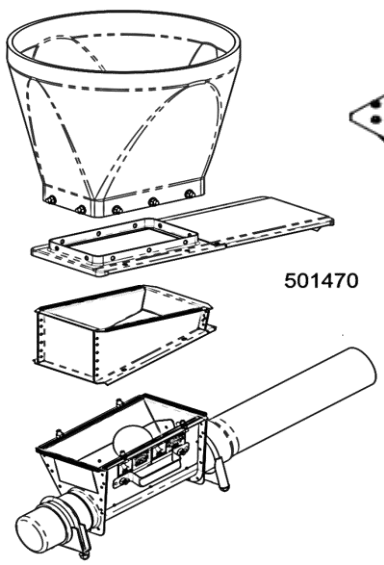

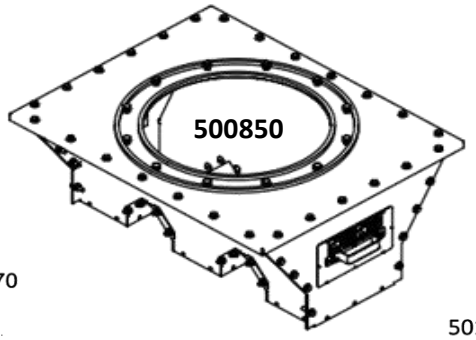

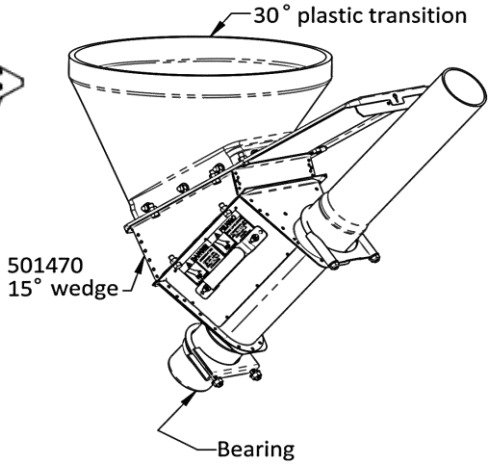

This page left intentionally blank

SECTION 03
SCALES

IN THIS CATALOG SECTION

PAGE NUMBER	CONTENTS
03-02	Mechanical Spinks Bin Scales & Controls
03-03	Weigh Bins & Weigh Bin Fill Systems
03-04 thru 03-07	Load Cell Weigh System
03-08	Mechanical Spinks Bin Scales & Controls
03-09	SENTINEL Broiler Scale
03-10	SENTINEL Breeder Scale
03-11	SENTINEL Adult Turkey Scale
03-12	SENTINEL Bird Scale Accessories

Toll-free: 1-800-99VALCO
Phone: (+1) 419-678-8731
Fax: (+1) 419-678-2200

WWW.VAL-CO.COM

MECHANICAL BIN SCALES & ACCESSORIES

MECHANICAL BIN SCALES (SPINKS)

CATALOG #	ITEM DESCRIPTION	SHIP WEIGHT LBS.	SHIP WEIGHT KG.	LIST PRICE
415473	10,000 lb. Mechanical Bin Scale for 6' & 7" Bins - Includes Beam Box (415475 Adapter Kit Required for Use With 7' Bin)	8.2	3.7	
415442	5000 lb. Mechanical Bin Scale for 6' & 7' Bins - Includes Beam Box (415475 Adapter Kit Required for Use With 7' Bin)	6.8	3.1	
415593	Scale Conversion Kit: 5,000 lbs. to 10,000 lbs.	0.4	0.2	
415520	2300 kg. Mechanical Bin Scale for 6' & 7' Bins - Includes Beam Box (415475 Adapter Kit Required for Use With 7' Bin)	0.1	0.1	

CHAIN FEEDER CONTROLS FOR BIN SCALES (SPINKS)

CATALOG #	ITEM DESCRIPTION	SHIP WEIGHT LBS.	SHIP WEIGHT KG.	LIST PRICE
415491	CC-HL2 Chain Feeder Control Box for Bin Scale 2 Channel Clock - operates bin scale & feed line fill systems; feed line is controlled by digital time clock; 2nd channel is wired to 2 relays for secondary operation, normally used for lights. Controls fill system from the supply as well as the fill system(s) form the weigh bin to the feed line(s) in the house. The time clock controls the hen feed line(s) in the house and has two additional relays for cases where more than 30 amps are needed. (000103)	7.4	3.4	
415492	CC-4HLWW Chain Feeder Control Box for Bin Scale 4 channel control for feed lines, lights, water, and rooster winch. Please specify the number and type of lights. (000105)	7.4	3.4	
415489	CC-SD Chain Feeder Control Box for Bin Scale Used for pullets when skip-a-day feeding is required. One alternating relay is controlled by channel 2 and is used for every other day feeding (NOT 2 days off & 3 days on). Also has a manual control switch which allows changing from skip-a-day feeding to everyday feeding and back again without reprogramming the clock. (000104)	7.5	3.4	
415522	CC-H Chain Feeder Control Box for Bin Scale - No Clock Operates bin scale, fill system, and feed line. Wired for manual feed line operation and/or accepts mechanical time clock. (000101)	0.9	0.4	

All controls work for 50HZ or 60HZ applications.
Controls for 3 phase, international voltages, and other applications are available -- call for pricing.
All controls can be easily upgraded in the field.

Toll-free: 1-800-99VALCO
Phone: (+1) 419-678-8731
Fax: (+1) 419-678-2200

WWW.VAL-CO.COM

WEIGH BINS & WEIGH BIN FILL SYSTEMS

6' WEIGH BINS & FILL SYSTEMS

CATALOG #	ITEM DESCRIPTION	SHIP WEIGHT LBS.	SHIP WEIGHT KG.	LIST PRICE
506301	6' x 1 Ring Weigh Bin - 2.8 ton Capacity (at 40 lbs./cubic ft.)	450.0	204.1	
506101	Ladder for 6' x 1 Ring Weigh Bin	47.0	21.3	
506312	6' x 2 Ring Weigh Bin - 4.3 ton Capacity (at 40 lbs./cubic ft.)	534.0	242.2	
506102	Ladder for 6' x 2 Ring Weigh Bin	56.0	25.4	

WEIGH BIN FILL SYSTEMS

SEE PRICING IN CATALOG SECTION 04

MODEL 730 3" / 75MM FILL SYSTEM FROM SINGLE SUPPLY BIN TO WEIGH BIN

CATALOG #	ITEM DESCRIPTION	LBS.	KGS.	QTY REQ'D
500475	30 Degree Plastic Upper Boot Transition	5.0	2.3	1
730943	3" Single Outlet Lower Boot With Slide Valve	26.9	12.2	1
730499	3" x 45 Degree Formed PVC Tube	3.2	1.5	2
730434	3" x 10' Straight PVC Tube	7.4	3.4	2
730415	PVC Cement - 1/2 Pint	1.0	0.5	1
730440	2.38" O.D. Auger (per foot)	1.0	0.4	35'
730304	3" Port & Driver Kit	3.6	1.6	1
CHOOSE	.75 HP Direct Drive Motor & Gearbox Assembly	53.0	24.0	1

MODEL 730 3" / 75MM FILL SYSTEM FROM TWO SUPPLY BINS TO WEIGH BIN

CATALOG #	ITEM DESCRIPTION	LBS.	KGS.	QTY REQ'D
500485	Straight Plastic Upper Boot Transition	6.0	2.7	2
730943	3" Single Outlet Lower Boot With Slide Valve	26.9	12.2	1
730940	3" Single Outlet Pass-Thru Lower Boot With Slide Valve	26.1	11.8	1
730499	3" x 45 Degree Formed PVC Tube	3.2	1.5	2
730434	3" x 10' Straight PVC Tube	7.4	3.4	3
730415	PVC Cement - 1/2 Pint	1.0	0.5	1
730440	2.38" O.D. Auger (per foot)	1.0	0.4	45'
730304	3" Port & Driver Kit	3.6	1.6	1
CHOOSE	.75 HP Direct Drive Motor & Gearbox Assembly	53.0	24.0	1

MODEL 735HV 3.5"/90MM FILL SYSTEM FROM SINGLE SUPPLY BIN TO WEIGH BIN

CATALOG #	ITEM DESCRIPTION	LBS.	KGS.	QTY REQ'D
500475	30 Degree Plastic Upper Boot Transition	5.0	2.3	1
735993	3.5" HV Single Outlet Lower Boot With Slide Valve	29.6	13.4	1
735499	3.5" x 45 Degree Formed PVC Tube	4.1	1.9	2
735434	3.5" x 10' Straight PVC Tube	9.6	4.4	2
730415	PVC Cement - 1/2 Pint	1.0	0.5	1
735440	2.71" O.D. Auger (per foot)	0.9	0.4	35'
735305	3.5" HV Port & Driver Kit	4.9	2.2	1
CHOOSE	.75 HP Direct Drive Motor & Gearbox Assembly	53.0	24.0	1

MODEL 735HV 3.5"/90MM FILL SYSTEM FROM TWO SUPPLY BINS TO WEIGH BIN

CATALOG #	ITEM DESCRIPTION	LBS.	KGS.	QTY REQ'D
500485	Straight Plastic Upper Boot Transition	6.0	2.7	2
735993	3.5" HV Single Outlet Lower Boot With Slide Valve	29.6	13.4	1
735940	3.5" Single Outlet Pass-Thru Lower Boot With Slide Valve	26.8	12.2	1
735499	3.5" x 45 Degree Formed PVC Tube	4.1	1.9	2
735434	3.5" x 10' Straight PVC Tube	9.6	4.4	3
730415	PVC Cement - 1/2 Pint	1.0	0.5	1
735440	2.71" O.D. Auger (per foot)	0.9	0.4	45'
735305	3.5" HV Port & Driver Kit	4.9	2.2	1
CHOOSE	.75 HP Direct Drive Motor & Gearbox Assembly	53.0	24.0	1

Toll-free: 1-800-99VALCO
Phone: (+1) 419-678-8731
Fax: (+1) 419-678-2200

WWW.VAL-CO.COM

BIN TRAC® LOAD CELL WEIGHING SYSTEMS

HOW TO ORDER

BIN TRAC® LOAD CELL WEIGHING SYSTEMS

1 Select one Bin Trac Load Cell Kit for each feed bin. See next page for listing of components included with each kit.

2 Select power supply and display console. Each power supply & **Standard** display console can can be used for 1-4 bins. (More than four bins require additional consoles and power supplies.) One power supply & one **Breeder** display control is required for each weigh bin. Dual Breeder display controls may be used to operate 2 separate augers while using 1 set of load cells. 1 optional auger relay kit per breeder display control.

3 Select Optional Remote Radio. A) 1 Communication Kit may be used for up to 99 bins.
B) 1 Base Radio for each Communication Kit.
C) 1 Remote Radio per power supply/summing box
D) Necessary length of Base Radio Interface Cable
E) Necessary length of Remote Radio Interface Cable
F) BinLink license

LOAD CELL & LEG BRACKET UNITS

6,500 lb. (2,948 kg.) Load Cell (4), Bracket (4) & Anchor Bolts (8)

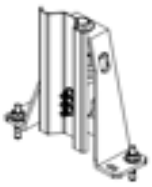

10,000 lb. (4,536 kg.) Load Cell (6), Bracket (6) & Anchor Bolts (12)

15,000 lb. (6,804 kg.) Load Cell (8), Bracket (8) & Anchor Bolts (16)

1 BIN TRAC® LOAD CELL KITS

CATALOG NUMBER	ITEM DESCRIPTION	SHIP WEIGHT LBS.	SHIP WEIGHT KG.	LIST PRICE
502107	Kit for Bins 6' and 7' **Weigh Bins*** - Includes 4 - 5,000 lb. (2,268 kg.) Load Cells, Brackets & 8 Anchor Bolts	89.8	40.7	
502100	Kit for Bins 6' x 1-4 Rings and 7' x 1-4 Rings - Includes 4 - 10,000 lb. (4,536 kg.) Load Cells, Brackets & 8 Anchor Bolts	171.7	77.9	
502101	Kit for Bins 7' x 5-6 Rings - Includes 4 - 10,000 lb. (4,536 kg.) Load Cells, Brackets & 8 Anchor Bolts	89.8	40.7	
502102	Kit for Bins 9' x 1-4 Rings - Includes 6 - 10,000 lb. (4,536 kg.) Load Cells, Brackets & 12 Anchor Bolts	261.6	118.6	
502103	Kit for Bins 9' x 5-6 Rings - Includes 6 - 10,000 lb. (4,536 kg.) Load Cells, Brackets & 12 Anchor Bolts	134.0	60.8	
502105	Kit for Bins 12' x 1-4 Rings - Includes 8 - 10,000 lb. (4,536 kg.) Load Cells, Brackets & 16 Anchor Bolts	177.8	80.6	
502106	Kit for Bins 12' x 5-7 Rings - Includes 8 - 15,000 lb. (6,804 kg.) Load Cells, Brackets & 16 Anchor Bolts	289.8	131.5	

Bin Trac® Load Cell Kits are sold for use with VAL-CO feed bins only. Leg reinforcement brackets are included. Use of these Load Cell Kits or Components on non-VAL-CO feed bins may void the manufacturers warranty. VAL-CO accepts no liability whatsoever for the use of these Load Cell Kits or Components on non-VAL-CO feed bins.

Note: Kits contain 1 load cell and mounting bracket per leg, summing box (standard), cable ties, and wire.

**For use with breeder scale weigh bins that require greater load cell resolution.*

BIN TRAC® LOAD CELL WEIGHING SYSTEMS

2 POWER SUPPLY & DISPLAY CONSOLE

CATALOG NUMBER	ITEM DESCRIPTION	SHIP WEIGHT LBS.	SHIP WEIGHT KG.	LIST PRICE
502163	Bin Trac Power Supply 110V/230V, 50/60Hz - 1 Required Per Display Console	3.0	1.36	
502127	Display Console - Standard Control - Maximum 4 Bins Per Console	0.9	0.23	
502134	Display Console - Breeder Control - Maximum one weigh bin per console	1.0	0.45	
502207	Display Console - Dual Breeder Control - Load / Unload - Maximum one weigh bin per console	2.0	0.45	
502208	Display Console - Dual Breeder Control - Unload / Unload - Maximum one weigh bin per console	2.0	0.45	
502156	Auger Relay Kit (Optional) - Breeder Control 1 per control (1/2 HP @ 240VAC)	0.5	0.45	
502209	Display Console - 6 Digit - Maximum four weigh bin per console	1.0	0.45	

3 REMOTE RADIO

CATALOG NUMBER	ITEM DESCRIPTION	SHIP WEIGHT LBS.	SHIP WEIGHT KG.	LIST PRICE
502177	PC Communication Kit	4.0	1.36	
502178	Internet Communication Kit	5.0	0.23	
502179	Cellular Communication Kit	5.0	0.45	
502175	Base Radio	1.5	0.45	
502176	Remote Radio	1.5	0.45	
502215	Radio Remote or Base - LoRa (requires 502128 cable)	2.0	0.45	
502128	22 GA AWG 4 Cond Shielded Cable per Foot	0.0	0.45	
502181	4 FT Base Radio Interface Cable	0.5	0.45	
502182	12 FT Base Radio Interface Cable	1.0	0.45	
502183	25 FT Base Radio Interface Cable	2.0	0.45	
502184	50 FT Base Radio Interface Cable	4.0	0.45	
502185	100 FT Base Radio Interface Cable	8.0	0.45	
502186	6 FT Remote Radio Interface Cable	0.5	0.45	
502187	10 FT Remote Radio Interface Cable	1.0	0.45	
502206	25 FT Remote Radio Interface Cable	1.0	0.45	
502180	BinLink License	1.0	0.45	

Toll-free: 1-800-99VALCO
Phone: (+1) 419-678-8731
Fax: (+1) 419-678-2200

WWW.VAL-CO.COM

BIN TRAC® LOAD CELL WEIGHING SYSTEMS
KIT COMPONENTS

BIN TRAC® KIT COMPONENTS FOR VAL-CO FEED BINS

					MINIMUM BIN SIZE	6' - 1R	7' - 1R	7' - 5R	9' - 1R	9' - 5R	12' - 1R	12' - 5R
					MAXIMUM BIN SIZE	6' - 2R	7' - 4R	7' - 6R	9' - 4R	9' - 6R	12' - 4R	12' - 7R
					KIT NUMBER	502107	502100	502101	502102	502103	502105	502106
CATALOG NUMBER	COMPONENT DESCRIPTION	LIST PRICE	SHIP WEIGHT LBS.	SHIP WEIGHT KGS.		QUANTITY REQUIRED						
502136	Single 5,000 lb. (2,268 kg.) Load Cell & Bracket Unit - "W" Leg Bolted Adapter **(For use with weigh bin scales)**		0.0	0.0		4	4	0	0	0	0	0
502111	Single 10,000 lb. (4,536 kg.) Load Cell & Bracket Unit - "W" Leg Bolted Adapter		0.0	0.0		4	4	4	6	6	8	0
502112	Single 15,000 lb. (6,804 kg.) Load Cell & Bracket Unit - "W" Leg Bolted Adapter		0.0	0.0		0	0	0	0	0	0	8
502214	Load Cell, 15,000 lb. (6804 kg.) - 3x5 Tube Leg with Weld Plate		0.5	0.3								
502152	Load Cell, 5000 lb. (2268 kg.)		1.2	0.6								
502153	Load Cell, 10,000 lb. (4536 kg.)		0.0	0.0								
502154	Load Cell, 15,000 lb. (6804 kg.)		0.0	0.0								
502120	Summing Box - 4 Load Cell - Standard Output		0.0	0.0								
502122	Summing Box - 6 Load Cell - Standard Output		0.0	0.0		0	0	0	1	1	0	0
502124	Summing Box - 8 Load Cell - Standard Output		0.0	0.0		0	0	0	0	0	1	1
502128	Cable 22AWG 4 With Shield - 1' (Per Foot)		0.0	0.0		50	50	50	50	50	50	50
012800	Wire Tie - Black UV - 7.5"		0.0	0.0		8	8	8	12	12	16	16
			List Price									

BIN TRAC® LOAD CELL WEIGHING SYSTEMS
OTHER COMPONENTS

INTERFACES

502130	Serial RS-232 - for use with PMSI NOAH, PMSI Command I, AEI System II: 1 Indicator per bin. PMSI Command II, AEI Integra System, Phason: 1 Indicator for up to 4 bins. - needs standard summing box and additional power supply	0.2	0.1	
502137	Proportional - for use with Rotem, Choretronics III SJB Scale Interface and Fancom F40 controls: 1 indicator for up to 2 bins. - needs standard summing box	2.5	1.1	
502133	Digital - for use with Choretronics II & Choretronics III Dump Scale controls: 1 interface for up to 4 bins. - needs standard summing box and additional power supply	0.5	0.2	
502205	Canbus – For use with Big Dutchman Viper & Skov controls. Needs standard summing box and 1 indicator is good for up to 2 bins	1.0	0.5	
502162	Proportional Low Voltage - for use with Maximus controls: 1 indicator for up to 2 bins. - needs standard summing box	0.3	0.1	
502120	Summing box - 4 load cell - standard	0.5	0.2	
502122	Summing box - 6 load cell - standard	1.2	0.5	
502124	Summing box - 8 load cell - standard	0.5	0.2	

INTERFACES

502155	Serial RS-232 Power Supply (Non Remote Radio)	0.2	0.1	
502163	Bin Trac Power Supply	3.0	1.4	
502202	Serial RS-232 Power Supply (Remote Radio)	1.0	0.5	

MISCELLANEOUS SCALES

PLATFORM SCALES

CATALOG #	ITEM DESCRIPTION	SHIP WEIGHT LBS.	SHIP WEIGHT KG.	LIST PRICE
415445	2,700 lb. Platform Scale 1 lb. Graduated Beam - With Slotted Weights	280.0	127.0	
415453	1,225 kg. Platform Scale Kilo Graduated Beam - With Slotted Weights	231.3	104.9	

PLATFORM SCALE ACCESSORIES

CATALOG #	ITEM DESCRIPTION	SHIP WEIGHT LBS.	SHIP WEIGHT KG.	LIST PRICE
415449	Platform Scale Control With Magnetic Cutoff Controls Fill System - 240v 60/50hz	10.0	4.5	
415526	Set of Extension Legs for Platform Scale Lifts Scale Off Floor for Easy Cleaning	0.0	0.0	
410509	1,400 lb. (635 kg.) Galvanized Weigh Hopper Includes Legs and Slide Gate	165.0	74.8	
410510	400 lb. (180 kg.) Galvanized Extension for 410509 Weigh Hopper	30.0	13.6	
415528	Lower Boot/Unloader Adapter Allows for Attachment of a Lower Boot/Unloader Directly to the 410509 Hopper (no plastic upper transition required)	25.0	11.3	
415448	Mount Rail Bridge Kit - for Suspended Model Hoppers	30.0	13.6	
415525	Mount Rail Bridge Kit - for Floor Model Hoppers	0.0	0.0	

ROOSTER FEEDING SCALES

SEE SEPARATE LISTING IN CATALOG SECTION 16

SENTINEL® BROILER SCALES

How To Order Broiler, Broiler Breeder, and Turkey Scales

1. Select Number of platform scale kits (BE-SSP-300) desired per poultry house.
2. Select load cell and converter (BE-SSLC-50KG). **One required per scale platform kit.**
3. Select controller BE-SSC-101 to connect 1-4 scale platforms all within 1-4 houses,
4. or select controller BE-SSC-201 to control/connect up to thirty BE-SSC-101 controllers totaling a max of 99 scale platforms.
5. Select Communication Board (BE-SSCB-102 Required for PC communication)
6. Order BE-SSS-001 PC Communication Software for Controller BE-SSC-101.
7. Order BE-SSS-002 PC Communication Software for Controller BE-SSC-201.
8. Select size and number of Calibration weight(s) (BE-SSW-30). **Only one (set) required per site.**
9. Select any additional accessories.

CATALOG #	ITEM DESCRIPTION	SHIP WEIGHT LBS.	SHIP WEIGHT KG.	LIST PRICE
BE-SSP-300	Platform Kit - Platform & Mounting Hardware (Shipped in two cartons - base & pole)	16.0	7.3	
BE-SSLC-50KG	110 lbs. (50 kg.) Load Cell With Converter (need one per platform)	4.0	1.8	
BE-SSC-101	Controller (Controls/Connects 1-4 scale platforms all within 1-4 houses)	5.5	2.5	
BE-SSS-001	Software (Required to communicate BE-SSC-101 with PC)	0.1	0.1	
BE-SSC-201	Controller to Control/Connect Multiple BE-SSC-101 controllers (max thirty BE-SSC-101 controllers and max 99 scale platforms)	4.6	2.1	
BE-SSS-002	Software (Required to communicate BE-SSC-201 with PC)	0.1	0.1	
BE-SSTS-2M	Stainless Steel Temperature Sensor With 6' Cable	0.1	0.1	
BE-SSW-30	30 lb. Calibration Weight (1 Required)	30.0	13.6	
ZC183F	18 AWG 3 Conductor Communication Wire - Per Foot (Scale to Control)	0.0	0.0	
VE-016-001	Deadbolt Surge Protection for Power Source	0.6	0.3	

NOTES:

1. 10kg metric weight also available: BE-SSW-10KG
2. See ACCESSORIES section on page 03-11 for additional communication boards available.
3. Surge protection for power source, phone, and data lines is strongly recommended (warranty does not cover lightning strikes).

   Surge suppressor for phone lines: 921810
   Deadbolt surge suppressor for data lines: VE-013-101

Toll-free: 1-800-99VALCO
Phone: (+1) 419-678-8731
Fax: (+1) 419-678-2200

WWW.VAL-CO.COM

SENTINEL® BROILER BREEDER SCALES

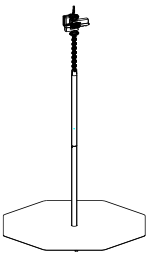

BREEDER SCALE KIT - 28" BASE

CATALOG #	ITEM DESCRIPTION	SHIP WEIGHT LBS.	SHIP WEIGHT KG.	LIST PRICE
BE-SSP-400	Platform Kit - Platform & Mounting Hardware (Shipped in two cartons - base & pole)	22.0	10.0	
BE-SSLC-50KG	110 lbs. (50 kg.) Load Cell With Converter (need one per platform)	4.0	1.8	
BE-SSC-101	Controller (Controls/Connects 1-4 scale platforms all within 1-4 houses)	5.5	2.5	
BE-SSS-001	Software (Required to communicate BE-SSC-101 with PC)	0.1	0.1	
BE-SSC-201	Controller to Control/Connect Multiple BE-SSC-101 controllers (max thirty BE-SSC-101 controllers and max 99 scale platforms)	4.6	2.1	
BE-SSS-002	Software (Required to communicate BE-SSC-201 with PC)	0.1	0.1	
BE-SSTS-2M	Stainless Steel Temperature Sensor With 6' Cable	0.1	0.1	
BE-SSW-30	30 lb. Calibration Weight (1 Required)	30.0	13.6	
ZC183F	18 AWG 3 Conductor Communication Wire - Per Foot (Scale to Control)	0.0	0.0	
VE-016-001	Deadbolt Surge Protection for Power Source	0.6	0.3	

NOTES:

1. 10kg metric weight also available: BE-SSW-10KG
2. See ACCESSORIES section on page 03-11 for additional communication boards available.
3. Surge protection for power source, phone, and data lines is strongly recommended (warranty does not cover lightning strikes).

   Surge suppressor for phone lines: 921810
   Deadbolt surge suppressor for data lines: VE-013-101

SENTINEL® ADULT TURKEY SCALES

Adult Turkey Scale Components

CATALOG #	ITEM DESCRIPTION	SHIP WEIGHT LBS.	SHIP WEIGHT KG.	LIST PRICE
BE-SSP-200	Platform Kit - Platform & Mounting Hardware	70.0	31.8	
BE-SSLC-100KG	220 lbs. (100 kg.) Load Cell With Converter (need one per platform)	4.1	1.9	
BE-SSC-101	Controller (Controls/Connects 1-4 scale platforms all within 1-4 houses)	5.5	2.5	
BE-SSS-001	Software (Required to communicate BE-SSC-101 with PC)	0.1	0.1	
BE-SSC-201	Controller to Control/Connect Multiple BE-SSC-101 controllers (max thirty BE-SSC-101 controllers and max 99 scale platforms)	4.6	2.1	
BE-SSS-002	Software (Required to communicate BE-SSC-201 with PC)	0.1	0.1	
BE-SSTS-2M	Stainless Steel Temperature Sensor With 6' Cable	0.1	0.1	
BE-SSW-30	30 lb. Calibration Weight (2 Required)	30.0	13.6	
ZC183F	18 AWG 3 Conductor Communication Wire - Per Foot (Scale to Control)	0.0	0.0	
VE-016-001	Deadbolt Surge Protection for Power Source	0.6	0.3	

NOTES:

1. 10kg metric weight also available: BE-SSW-10KG
2. See ACCESSORIES section on page 03-12 for additional communication boards available.
3. Surge protection for power source, phone, and data lines is strongly recommended (warranty does not cover lightning strikes).

   Surge suppressor for phone lines: 921810
   Deadbolt surge suppressor for data lines: VE-013-101

SENTINEL BIRD SCALES
ACCESSORIES

SENTINEL BIRD SCALE ACCESSORIES		SHIP WEIGHT		LIST PRICE
CATALOG #	ITEM DESCRIPTION	LBS.	KG.	
921810	Surge Suppressor for Telephone Line Protection	0.50	0.23	
BE-SSA-101	ANTENNA, COM-40 W/ 30'CABLE AND MOUNT Need 1 per BE-SSCB-501 or BE-SSCB-502	3.7	1.7	
BE-SSC-201	MULTIPLE SCALE CONTROL INTERFACE Ties multiple controllers to PC up to 32	4.6	2.1	
BE-SSCB-201	BOARD, COM-51 MODEM Allows access to control via phone modem	1.0	0.5	
BE-SSCB-301	BOARD, COM-12 RS485 TO RS422 Allows communication between an interface control to a PC	0.2	0.1	
BE-SSCB-501	BOARD, COM-40 CLIENT (CONTROL) Wireless 3000' range connects control to interface	0.0	0.0	
BE-SSCB-502	BOARD, COM-40 SERVER (INTRFCE) Wireless 3000' range connects interface to control	0.0	0.0	
BE-SSCB-503	BOARD, COM-60 ETHERNET MODEM Connects control/interface to remote PC via Ethernet	0.0	0.0	
BE-SSCB-601	ADAPTOR, USB TO 9-PIN SERIAL Use with BE-SSCB-101 if PC has no serial port	0.0	0.0	
BE-SSF-503	YEARLY LICENSE FEE FOR BE-SSCB-503 Requires 1 for each BE-SSCB-60	0.0	0.0	
BE-SSLU-101	OPTILINK 7.0.x LICENSE UPGRADE Upgrade from Optilink 6.0.x	0.0	0.0	
VE-013-101	Deadbolt Surge Protection for Data	0.12	0.06	
ZC183F	18 AWG 3 CONDUCTOR COMMUNICATION WIRE - Per Foot	0.0	0.0	

NOTES:
1. 10kg metric weight also available: BE-SSW-10KG
2. Surge protection for power source, phone, and data lines is strongly recommended. (Listed on previous page.) (warranty does not cover lightning strikes).

Toll-free: 1-800-99VALCO
Phone: (+1) 419-678-8731
Fax: (+1) 419-678-2200

SECTION 04
FLEXIBLE AUGER FILL SYSTEMS

IN THIS CATALOG SECTION

PAGE NUMBER	CONTENTS
04-01	Table of Contents & Fill System Disclaimers
04-02	How to Order a Fill System
04-03	Fill Systems Information
04-04 thru 04-07	Lower Boots/Unloaders
04-08 thru 04-13	Tube, Connectors & Auger
04-14 thru 04-17	Drop Outlets & Downspout Tubes
04-18 thru 04-22	Discharge Heads - Steel, Poly, and Downspout Tubes
04-23	Port & Driver Kits
04-24 thru 04-25	Direct Drive Units, V-Belt Unit
04-26	Switches & Controls
04-27 thru 04-30	Fill Systems Entrance Drawings
04-31 thru 04-34	Model 720 Fill Systems - 2.25"/55mm
04-35 thru 04-38	Model 725 Fill Systems - 3"/75mm
04-39 thru 04-42	Model 730 Fill Systems - 3"/75mm
04-43 thru 04-46	Model 735HV Fill Systems - 3.5"/90mm - High Volume
04-47 thru 04-50	Model 735HM Fill Systems - 3.5"/90mm - High Moisture

Model 740 (4.25") FLEXIBLE AUGER FILL SYSTEMS

04-51	Table of Contents & Fill System Disclaimers
04-52 & 04-53	Fill Systems Entrance Drawings / HP requirements & Application Notes
04-54	Upper Boot / Adapter
04-55	Lower Boots / Unloaders
04-56	Flexible Auger / Steel Tubes
04-57	Tubes, Hangers & Feed Screener
04-58	Drop Outlets & Downspout Tubes
04-59	Discharge Heads
04-60	Discharge Head Kits / Port & Driver Kits
04-61	Flag System Accessories / Switches & Controls
04-62	Direct Drive Table
04-63	Direct Drive Motors and Gear Box Units

REPAIRS

SEE REPAIR LISTING & REFERENCE MATERIAL IN SEPARATE CATALOG

VAL-CO SYSTEM DISCLAIMER

Recommendations, opinions, or advice given by Val-Co regarding equipment, systems, or installation shall be accepted at the user's own discretion and shall not constitute any warranty or guarantee of such products or their performance. Val-Co assumes no obligation or liability on account of any recommendation, opinions or advice as to the choice, installation, or use of products.

Before installation is made on any product or system, the user has a responsibility to research and comply with all federal, state, and local codes which may apply to the location and installation.

VAL-CO PRODUCT DISCLAIMER

Val-Co products are designed and manufactured to provide reliable performance. Even reliable products may experience occasional failures, due to variance of installation, environment, and the recognized life cycle of a product. Due to the possibility of failure, the user should provide adequate backup systems and an alarm or acknowledge willingness to accept the risk of loss.

WARRANTY

SEE CATALOG SECTION 01 TO REVIEW WARRANTY & DISCLAIMERS

Toll-free: 1-800-99VALCO
Phone: (+1) 419-678-8731
Fax: (+1) 419-678-2200

HOW TO ORDER A FILL SYSTEM

TO ORDER A VAL-CO FLEXIBLE AUGER FILL SYSTEM:

- Refer to system notes on page 04-03 to determine which system best meets your needs.
- Determine plastic upper boot and lower boot required and order from pages 04-04 thru 04-05.
- Refer to system sketches on page 04-27 thru 04-30 and then to the appropriate corresponding charts on pages 04-31 thru 04-50. Using your selected chart as a guideline, select the line components required for your system. Select & order components as indicated from the listings on pages 04-06 thru 04-21.
- Additional savings are available if you order PVC tubes and Flexible Auger in bulk quantities shown on pages 04-08 and 04-13.
- Determine number of drop outlets needed and order from pages 04-14 & 04-16 along with any downspout tubes and/or accessories needed.
- Select and order feed level control switch from page 04-26.
- Contact your Val-Co sales representative or Customer Service for assistance if needed.

Toll-free: 1-800-99VALCO
Phone: (+1) 419-678-8731
Fax: (+1) 419-678-2200

FLEXIBLE AUGER FEED DELIVERY SYSTEMS

MODEL 720 2.25" (55mm) FLEXIBLE AUGER FILL SYSTEMS

Used to convey dry ground feed and crumble type mash - maximum moisture content 18%. Maximum particle size 1/8" diameter x 1/2" long. Do not use for large pellets or shelled corn. PVC tubes are 2.25" (55mm) outside diameter; flexible auger is 1.52" outside diameter. Approximate feed delivery rate is 15 lbs. per minute or 900 lbs. per hour based on 40 lbs./cubic foot feed density and 359 rpm drive unit.

MODEL 725 "PELLET" 3" (75mm) FLEXIBLE AUGER FILL SYSTEMS

Used to convey dry ground feed and crumble type mash - maximum moisture content 18%. Maximum particle size 1/8" diameter x 1/2" long. System is recommended for pellets or shelled corn. PVC tubes are 3" (75mm) outside diameter; flexible auger is 2.25" outside diameter. Approximate feed delivery rate is 35 lbs. per minute or 2100 lbs. per hour based on 40 lbs./cubic foot feed density and 359 rpm drive unit.

MODEL 730 3" (75mm) FLEXIBLE AUGER FILL SYSTEMS

Used to convey dry ground feed and crumble type mash - maximum moisture content 18%. Maximum particle size 1/8" diameter x 1/2" long. Do not use for large pellets or shelled corn. PVC tubes are 3" (75mm) outside diameter; flexible auger is 2.38" outside diameter. Approximate feed delivery rate is 50 lbs. per minute or 3000 lbs. per hour based on 40 lbs./cubic foot feed density and 359 rpm drive unit.

MODEL 735 HV 3.5" (90mm) FLEXIBLE AUGER FILL SYSTEMS

Used to convey dry ground feed and crumble type mash - maximum moisture content 18%. Maximum particle size 3/16" diameter x 1/2" long. Do not use for large pellets or shelled corn. PVC tubes are 3.5" (90mm) outside diameter; flexible auger is 2.71" outside diameter. Approximate feed delivery rate is 100 lbs. per minute or 6000 lbs. per hour based on 40 lbs./cubic foot feed density and 359 rpm drive unit.

MODEL 735 HM 3.5" (90mm) FLEXIBLE AUGER FILL SYSTEMS

Used to convey dry ground feed and crumble type mash - **maximum moisture content 27%**. Maximum particle size 3/8" diameter x 3/4" long. Do not use for large pellets or shelled corn. PVC tubes are 3.5" (90mm) outside diameter; flexible auger is 2.38" outside diameter. Approximate feed delivery rate is 50 lbs. per minute or 3000 lbs. per hour based on 40 lbs./cubic foot feed density and 359 rpm drive unit.

MODEL 740 HV 4.25" (108mm) FLEXIBLE AUGER FILL SYSTEMS

See Pages 04-51 & 04-52 for more detail

Used to convey dry ground feed and crumble type mash. Maximum particle size 3/16" diameter x 1/2" long.
PVC tubes are 4.5" (108mm) outside diameter; flexible auger is 3.55" outside diameter.
Approximate feed delivery rate is 220 lbs. per minute or 13,200 lbs. per hour based on 40 lbs./cubic foot feed density and 359 rpm drive unit.

SYSTEM NOTES

Auger boots, tube hangers, feed drop outlets, downspout tubes, feed control switches and other optional items are not included with the systems listed. Order these items separately.

Size your system to make the maximum operating time four hours per day. Some applications may require two flexible auger fill systems or possibly a 4" or 6" rigid auger system to meet the desired delivery rate.

A time clock or other control is recommended with all systems to prevent excess empty auger operation and other malfunctions.

Multiple bin pass-thru or tandem systems are recommended when extra feed storage or dual rations are required.

Extended length systems are complete with components to transfer from one feed line to another. These systems are available with direct drive power units only. RECOMMENDATION: Select a drive unit with a faster output rpm for the extended system than for the supply (entrance or pass-thru) system.

All systems are normally wired for 230V, 60HZ, 1 Phase operation. Additional motors (60HZ - 3 Phase, 50HZ - 1 Phase, & 50HZ - 3 Phase) are also available.

Standard drive unit (both v-belt and direct drive) is 359 rpm at 60HZ, 368 rpm at 50HZ operation. Alternate speeds (190, 250, & 441 rpm at 60HZ -- 159, 208, & 298 rpm at 50HZ) are also available.

IMPORTANT

WHEN USING ADDITIONAL FORMED TUBES ON A SYSTEM, FOR EACH ADDITIONAL 90° OF FORMED PVC TUBE ADDED TO A LINE DECREASE THE MAXIMUM LINE LENGTH FOR EACH MOTOR SIZE BY 30 FEET.

Toll-free: 1-800-99VALCO
Phone: (+1) 419-678-8731
Fax: (+1) 419-678-2200

UPPER BOOT TRANSITIONS & LOWER BOOT KITS

UPPER BOOT TRANSITIONS

CATALOG #	ITEM DESCRIPTION	SHIP WEIGHT LBS.	SHIP WEIGHT KG.	LIST PRICE
500475	30 Degree Plastic Upper Boot Transition - Green	4.9	2.2	
500857	30 Degree Plastic Upper Boot Transition - Translucent	4.9	2.2	
500575	30 Degree Plastic Upper Boot Transition - Clear	4.6	2.1	
500485	Straight Plastic Upper Boot Transition - Green	5.5	2.5	
500855	Straight Plastic Upper Boot Transition - Translucent	5.6	2.5	
500585	Straight Plastic Upper Boot Transition - Clear	4.8	2.2	
700010	Straight Double Plastic Upper Boot Transition - Green	7.0	3.2	
500850	Straight Triple Boot Transition	55.6	25.2	
501480	7.5º Transition Wedge Assembly Kit	2.9	1.3	
501470	15º Transition Wedge Assembly Kit (can be used with 30º Boot to achieve 45º)	4.4	2.0	

500475 - Green
500857 - Translucent

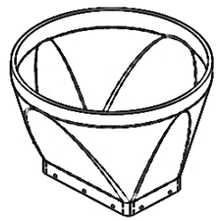

500485 - Green
500855 - Translucent
500585 - Clear

700010

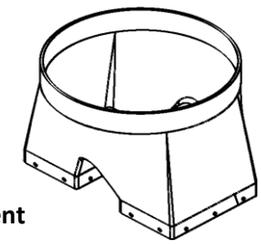

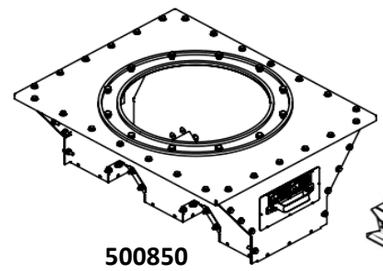

500850

501470 - 15º
501480 -7.5º

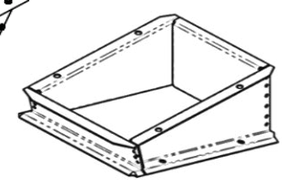

MODEL 720 - 2.25" (55mm) LOWER BOOTS

720963	2.25" Single Outlet Lower Boot - Complete with Anchor & Bearing Kit and Single SV	23.7	10.7	
720964	2.25" Single Outlet Lower Boot - Complete with Anchor & Bearing Kit - without SV	18.3	8.3	
720965	2.25" Twin Outlet Lower Boot - Complete with Anchor & Bearing Kits (2) and Single SV	37.5	9.8	
720966	2.25" Twin Outlet Lower Boot - Complete with Anchor & Bearing Kits (2) and Split SV	37.5	17.0	
720967	2.25" Twin Outlet Lower Boot - Complete with Anchor & Bearing Kits (2) - without SV	32.1	14.6	
720968	2.25" Combination Twin Outlet Lower Boot - Complete with Anchor & Bearing Kit, P-T Kit, Baffle/Restrictor and Split SV	40.8	18.5	
720940	2.25" Single Outlet Pass-Thru Lower Boot - Complete with P-T Kit, Baffle/Restrictor and Single SV	25.1	11.4	
720960	2.25" Twin Outlet Pass-Thru Lower Boot - Complete with P-T Kits (2), Baffle/Restrictor and Single SV	39.7	18.0	
720961	2.25" Twin Outlet Pass-Thru Lower Boot - Complete with P-T Kits (2), Baffle/Restrictor and Split SV	32.5	14.7	

Boot kits shipped in multiple cartons - see boot component listing on pages 04-06.

MODEL 725 - 3" (75mm) LOWER BOOTS (Pellet Auger System)

725931	3" Single Outlet Lower Boot - Complete with Anchor & Bearing Kit and Single SV	26.9	12.2	
725937	3" Single Outlet Lower Boot Stainless Steel - Complete with Anchor & Bearing Kit and Single SV	30.0	13.6	
725932	3" Single Outlet Lower Boot - Complete with Anchor & Bearing Kit - without SV	21.5	9.8	
725938	3" Single Outlet Lower Boot Stainless Steel - Complete with Anchor & Bearing Kit - without SV	23.1	10.5	
725933	3" Twin Outlet Lower Boot - Complete with Anchor & Bearing Kits (2) and Single SV	45.6	20.7	
725934	3" Twin Outlet Lower Boot - Complete with Anchor & Bearing Kits (2) and Split SV	46.1	20.9	
725935	3" Twin Outlet Lower Boot - Complete with Anchor & Bearing Kits (2) - without SV	40.2	18.2	
725936	3" Combination Twin Outlet Lower Boot - Complete with Anchor & Bearing Kit, P-T Kit, and Split SV	46.5	21.1	
730940	3" Single Outlet Pass-Thru Lower Boot - Complete with P-T Kit, and Single SV	26.1	11.8	
730960	3" Twin Outlet Pass-Thru Lower Boot - Complete with P-T Kits (2), and Single SV	43.3	19.6	
730961	3" Twin Outlet Pass-Thru Lower Boot - Complete with P-T Kits (2), and Split SV	43.8	19.9	

Boot kits shipped in multiple cartons - see boot component listing on pages 04-06.

Toll-free: 1-800-99VALCO
Phone: (+1) 419-678-8731
Fax: (+1) 419-678-2200

MODEL 730 - 3" (75mm) LOWER BOOTS (Standard System)

CATALOG #	ITEM DESCRIPTION	SHIP WEIGHT LBS.	SHIP WEIGHT KG.	LIST PRICE
730943	3" Single Outlet Lower Boot - Complete with Anchor & Bearing Kit and Single SV	24.6	11.2	
730944	3" Single Outlet Lower Boot - Complete with Anchor & Bearing Kit - without SV	19.2	8.7	
731076	3" Single Outlet Lower Boot Stainless Steel- Complete with Anchor & Bearing Kit - without SV	23.4	10.6	
730945	3" Twin Outlet Lower Boot - Complete with Anchor & Bearing Kits (2) and Single SV	43.3	19.6	
730946	3" Twin Outlet Lower Boot - Complete with Anchor & Bearing Kits (2) and Split SV	43.3	19.6	
730947	3" Twin Outlet Lower Boot - Complete with Anchor & Bearing Kits (2) - without SV	37.9	17.2	
730948	3" Combination Twin Outlet Lower Boot - Complete with Anchor & Bearing Kit, P-T Kit, Baffle/Restrictor and Split SV	44.3	20.1	
730940	3" Single Outlet Pass-Thru Lower Boot - Complete with P-T Kit, Baffle/Restrictor and Single SV	26.1	11.8	
730960	3" Twin Outlet Pass-Thru Lower Boot - Complete with P-T Kits (2), Baffle/Restrictor and Single SV	43.3	19.6	
730961	3" Twin Outlet Pass-Thru Lower Boot - Complete with P-T Kits (2), Baffle/Restrictor and Split SV	43.8	19.9	
731050	3" Single Outlet SS Lower Boot - Complete with Anchor & Bearing Kit and Single SV	24.5	11.1	

Boot kits shipped in multiple cartons - see boot component listing on pages 04-06.

MODEL 735HV - 3.5" (90mm) HV LOWER BOOTS

735993	3.5" HV Single Outlet Lower Boot - Complete with Anchor & Bearing Kit and Single SV	27.3	12.4	
735994	3.5" HV Single Outlet Lower Boot - Complete with Anchor & Bearing Kit - without SV	21.9	9.9	
735995	3.5" HV Twin Outlet Lower Boot - Complete with Anchor & Bearing Kits (2) and Single SV	21.9	9.9	
735996	3.5" HV Twin Outlet Lower Boot - Complete with Anchor & Bearing Kits (2) and Split SV	48.6	22.0	
735997	3.5" HV Twin Outlet Lower Boot - Complete with Anchor & Bearing Kits (2) - without SV	42.7	19.4	
735998	3.5" HV Combination Twin Outlet Lower Boot - Complete with Anchor & Bearing Kit, P-T Kit, Baffle/Restrictor and Split SV	47.1	21.4	
735940	3.5" HV/HM Single Outlet Pass-Thru Lower Boot - Complete with P-T Kit, Baffle/Restrictor and Single SV	26.8	12.2	
735960	3.5" HV/HM Twin Outlet Pass-Thru Lower Boot - Complete with P-T Kits (2), Baffle/Restrictor and Single SV	44.1	20.0	
735961	3.5" HV/HM Twin Outlet Pass-Thru Lower Boot - Complete with P-T Kits (2), Baffle/Restrictor and Split SV	44.6	20.2	

Boot kits shipped in multiple cartons - see boot component listing on pages 04-06.

MODEL 735HM - 3.5" (90mm) HM LOWER BOOTS

735984	3.5" HM Single Outlet Lower Boot - Complete with Anchor & Bearing Kit and Single SV	26.4	12.0	
735985	3.5" HM Single Outlet Lower Boot - Complete with Anchor & Bearing Kit - without SV	19.5	8.8	
735986	3.5" HM Twin Outlet Lower Boot - Complete with Anchor & Bearing Kits (2) and Single SV	45.8	20.8	
735987	3.5" HM Twin Outlet Lower Boot - Complete with Anchor & Bearing Kits (2) and Split SV	45.8	20.8	
735988	3.5" HM Twin Outlet Lower Boot - Complete with Anchor & Bearing Kits (2) - without SV	40.4	18.3	
735989	3.5" HM Combination Twin Outlet Lower Boot - Complete with Anchor & Bearing Kit, P-T Kit, Baffle/Restrictor and Split SV	46.2	21.0	
735940	3.5" HV/HM Single Outlet Pass-Thru Lower Boot - Complete with P-T Kit, Baffle/Restrictor and Single SV	26.8	12.2	
735960	3.5" HV/HM Twin Outlet Pass-Thru Lower Boot - Complete with P-T Kits (2), Baffle/Restrictor and Single SV	44.1	20.0	
735961	3.5" HV/HM Twin Outlet Pass-Thru Lower Boot - Complete with P-T Kits (2), Baffle/Restrictor and Split SV	44.6	20.2	

Boot kits shipped in multiple cartons - see boot component listing on pages 04-06.

Lower Boot Adapters

730375	Lower boot adapter to attach to Broiler Feed Hoppers	2.6	1.8	
730296	Coupler for Val-co 730 Boot to AP/Cumberland 3" PBC Tube	1.8	1.8	

Feed Screener

501540	735 Auger Feed Screener	64.0	1.8	

Boot Safety Switch

730965	Boot Safety Switch - Mechanical 110-220v, 20 amp, 1 phase, 50-60hz	1.1	0.5	
455800	Boot Safety Switch - Proximity switch, 0-60 sec. delay, adj. sensitivity, 1P/220v/50-60	4.0	1.8	

Toll-free: 1-800-99VALCO
Phone: (+1) 419-678-8731
Fax: (+1) 419-678-2200

FLEXIBLE AUGER LOWER BOOT KIT COMPONENT REQUIREMENTS

		COMPONENTS & QUANTITY REQUIRED																	
COMPONENT →		BASIC BOOTS						SLIDE VALVES		ANCHOR & BEARING KITS					PASS-THRU KITS			BOOT BAFFLES	
SHIP WEIGHT →		15.2	26.0	15.2	27.6	15.9	28.4	5.4	5.9	4.0	3.8	6.3	8.3	6.9	2.5	3.5	3.5	2.0	1.5
CATALOG NUMBER & DESCRIPTION →		720839 2.25" Single	720849 2.25" Twin	730839 3" Single	730849 3" Twin	735839 3.5" Single	735849 3.5" Twin	500471 Single	500371 Twin/Split	720785 2.25"	731023 3" PELLET	731008 3"	735878 3.5" HV	735880 3.5" HM	720885 2.25"	730885 3"	735885 3.5"	730875 Single	730878 Twin
CATALOG NUMBER OF BOOT KIT	BOOT KIT DESCRIPTION	QUANTITY REQUIRED																	
720963	2.25" Single - Combination SV	1						1		1									
720964	2.25" Single - Less SV	1								1									
720965	2.25" Twin - Single SV		1					1		2									
720966	2.25" Twin - Split SV		1						1	2									
720967	2.25" Twin - Less SV		1							2									
720968	2.25" Twin Combination - Split SV		1						1	1					1				1
720940	2.25" Single Pass-Thru - Single SV	1						1							1			1	
720960	2.25" Twin Pass-Thru - Single SV		1					1							2				1
720961	2.25" Twin Pass-Thru - Split SV		1						1						2				1
725931	3" Single - Single SV - For 725			1				1			1								
725932	3" Single - Less SV - For 725			1							1								
725933	3" Twin - Single SV - For 725				1			1			2								
725934	3" Twin - Split SV - For 725				1				1		2								
725935	3" Twin - Less SV - For 725				1						2								
725936	3" Twin Combination - Split SV - For 725				1				1		1					1			1
730940	3" Single Pass-Thru - Single SV			1				1								1		1	
730960	3" Twin Pass-Thru - Single SV				1			1								2			1
730961	3" Twin Pass-Thru - Split SV				1				1							2			1
730943	3" Single - Single SV			1				1				1							
730944	3" Single - Less SV			1								1							
730945	3" Twin - Single SV				1			1				2							
730946	3" Twin - Split SV				1				1			2							
730947	3" Twin - Less SV				1							2							
730948	3" Twin Combination - Split SV				1				1			1				1			1
735993	3.5" HV Single - Single SV					1		1					1						
735994	3.5" HV Single - Less SV					1							1						
735995	3.5" HV Twin - Single SV						1	1					2						
735996	3.5" HV Twin - Split SV						1		1				2						
735997	3.5" HV Twin - Less SV						1						2						
735998	3.5" HV Twin Combination - Split SV						1		1				1				1		1
735940	3.5" Single Pass-Thru - Single SV					1		1									1	1	
735960	3.5" Twin Pass-Thru - Single SV						1	1									2		1
735961	3.5" Twin Pass-Thru - Split SV						1		1								2		1
735984	3.5" HM Single - Single SV					1		1						1					
735985	3.5" HM Single - Less SV					1		1											
735986	3.5" HM Twin - Single SV						1	1						2					
735987	3.5" HM Twin - Split SV						1		1					2					
735988	3.5" HM Twin - Less SV						1							2					
735989	3.5" HM Twin Combination - Split SV						1		1					1					1

Toll-free: 1-800-99VALCO
Phone: (+1) 419-678-8731
Fax: (+1) 419-678-2200

LOWER BOOT COMPONENTS & FLAG / EXTENDED LENGTH SYSTEM ACCESSORIES

LOWER BOOT KIT COMPONENTS

CATALOG #	ITEM DESCRIPTION	SHIP WEIGHT LBS.	SHIP WEIGHT KG.	LIST PRICE
720839	2.25" Single Outlet Basic Boot	15.2	6.9	
720849	2.25" Twin Outlet Basic Boot	26.0	11.8	
730839	3" 725 Pellet Auger Single Outlet Basic Boot	16.4	7.4	
730849	3" 725 Pellet Auger Twin Outlet Basic Boot	27.6	12.5	
730839	3" Single Outlet Basic Boot	16.4	7.4	
730849	3" Twin Outlet Basic Boot	27.6	12.5	
735839	3.5" Single Outlet Basic Boot	16.5	7.5	
735849	3.5" Twin Outlet Basic Boot	28.4	12.9	
500471	Boot Slide Valve - Single Plate	6.0	2.7	
500371	Boot Slide Valve - Twin/Split Plate	6.8	3.1	
720785	2.25" Anchor & Bearing	3.1	1.7	
731023	3" 725 Pellet Auger Anchor & Bearing	3.7	1.7	
731008	3" Anchor & Bearing	4.8	2.2	
735878	3.5" HV Anchor & Bearing	6.5	2.9	
735880	3.5" HM Anchor & Bearing	5.4	2.4	
720885	2.25" Pass-Thru Kit	2.5	1.1	
730885	3" 725 Pellet Auger Pass-Thru Kit	1.7	0.7	
730885	3" Pass-Thru Kit	1.7	0.7	
735885	3.5" Pass-Thru Kit	2.3	1.0	
730875	Single Boot Baffle/Restrictor	4.5	2.0	
730869	Twin Boot Baffle/Restrictor	3.3	1.5	

TO ORDER A COMPLETE LOWER BOOT BY COMPONENTS:

1. Select single or twin outlet basic boot.
2. Select single or twin slide valve.
3. Select anchor & bearing or pass-thru kit for each outlet of basic boot.
4. Select baffle/restrictor if pass-thru kit is used.
   Single Baffle for single outlet boot; twin baffle for twin boots (combination boots require twin baffle).

FLAG LINE & EXTENDED LENGTH SYSTEM ACCESSORIES

CATALOG #	ITEM DESCRIPTION	SHIP WEIGHT LBS.	SHIP WEIGHT KG.	LIST PRICE
730760	Model 730 / 725 3" (75mm) Steel Outlet Box for Cross Fill Line	12.0	5.4	
735760	Model 735 3.5" (90mm) Steel Outlet Box for Cross Fill Line	12.5	5.7	
500517	Transfer Plate - For Steel Connects Steel Discharge Head or Poly Outlet Box to Lower Boot Less Slide Valve for flag line & extended length system applications.	3.1	1.4	
730780	Model 730 / 725 3" Poly Outlet Box for Cross Fill Line	9.0	4.1	
735780	Model 735 3.5" Poly Outlet Box for Cross Fill Line	9.5	4.3	
500590	Transfer Plate - For Poly (Galvanized Components) Connects Poly Discharge Head or Poly Outlet Box to Lower Boot Less Slide Valve for flag line & extended length system applications.	3.3	1.5	
501650	Transfer Plate - For Poly (Stainless Steel Components) Connects Poly Discharge Head or Steel Outlet Box to Lower Boot Less Slide Valve for flag line & extended length system applications.	3.2	1.4	
730085	Transfer Plate with Hole Alternative to outlet boxes & adapters above - use on Lower Boot Less Slide Valve to Receive from Discharge Head or Drop Outlet (Steel or Poly)	2.0	0.9	

Above outlet boxes used in conjunction with 500517/500590 Adapters (above) and Lower Boot Assembly Less Slide Valve (order separately from pages 04-04 & 04-05) to make complete flag system hopper. Or use 720550/730550/735550 All-Out Drop (order separately from pages 04-15 & 04-17) with 730085 Cover Plate with Hole used on Lower Boot Assembly Less Slide. Hopper switches are not included.

Toll-free: 1-800-99VALCO
Phone: (+1) 419-678-8731
Fax: (+1) 419-678-2200

PVC TUBES & TUBE HANGERS

MODEL 720 - 2.25" PVC TUBES

CATALOG #	ITEM DESCRIPTION	SHIP WEIGHT LBS.	SHIP WEIGHT KG.	LIST PRICE
720498	2.25" 45 Degree Formed PVC Tube	2.5	1.2	
720498-065	Bundle of 65 - 720498 Tubes	110.5	50.1	
720434	2.25" 10' Straight PVC Tube	6.0	2.7	
720434-270	Bundle of 270 - 720434 Tubes	1,108.0	502.6	
720435	2.25"PVC Tube Splice	0.3	0.1	
720435-070	Carton of 70 - 720435 Splices	21.0	9.5	

MODEL 725 / 730 - 3" PVC TUBES

CATALOG #	ITEM DESCRIPTION	SHIP WEIGHT LBS.	SHIP WEIGHT KG.	LIST PRICE
730499	3" 45 Degree Formed PVC Tube	3.7	1.7	
730499-050	Bundle of 50 - 730499 Tubes	160.0	72.6	
730434	3" 10' Straight PVC Tube	9.0	4.1	
730434-116	Bundle of 116 - 730434 Tubes	858.4	389.4	
730435	3" PVC Tube Splice	0.5	0.2	
730435-080	Carton of 80 - 730435 Splices	32.0	14.5	

MODEL 735 - 3.5" PVC TUBES

CATALOG #	ITEM DESCRIPTION	SHIP WEIGHT LBS.	SHIP WEIGHT KG.	LIST PRICE
735499	3.5" 45 Degree Formed PVC Tube	4.7	2.1	
735499-040	Bundle of 40 - 735499 Tubes	164.0	74.4	
735434	3.5" 10' Straight PVC Tube	9.5	4.3	
735434-108	Bundle of 108 - 735434 Tubes	893.0	405.1	
735435	3.5" PVC Tube Splice	0.6	0.2	
735435-050	Carton of 50 - 735435 Splices	25.0	11.3	

PVC CEMENT

CATALOG #	ITEM DESCRIPTION	SHIP WEIGHT LBS.	SHIP WEIGHT KG.	LIST PRICE
730415	PVC Cement - 1/2 Pint	1.0	0.5	
VG125-QT	PVC Cement - Quart	0.0	0.0	

TUBE HANGING

CATALOG #	ITEM DESCRIPTION	SHIP WEIGHT LBS.	SHIP WEIGHT KG.	LIST PRICE
720220	2.25" Formed Tube Hanger	0.3	0.1	
713220	3" Formed Tube Hanger - Galvanized	0.5	0.2	
713223	3" Formed Tube Hanger - 304SS	0.5	0.2	
735220	3.5" Formed Tube Hanger	0.6	0.3	
820099	#2 Hanger Chain Only - Per Foot	0.3	0.1	
VEN91507C	S Hook - 1/4" x 2.25"	0.6	0.260	
VEN91504C	5/16" x 3-1/2" Screw Hook	2.9	1.316	
713441	5/16" x 5" Screw Hook	0.1	0.045	

Toll-free: 1-800-99VALCO
Phone: (+1) 419-678-8731
Fax: (+1) 419-678-2200

STEEL TUBES & CONNECTORS

MODEL 730 - 3"

CATALOG #	ITEM DESCRIPTION	SHIP WEIGHT LBS.	SHIP WEIGHT KG.	LIST PRICE
730426	3" 45 Degree Steel Formed Elbow NO Bell (Coupler Required)	9.3	4.2	
730951	75MM(3") 10' Steel Tube NO Bell (Coupler Required)	12.0	5.4	
730952	75MM(3") Steel Tube Coupler-Requires 2 Clamps (sold Separately)	1.0	0.5	
730953	3" Tube Clamp	0.7	0.3	
730908	3" Steel to PVC Adapter (REF 990259 Quicksheet)	0.5	0.2	

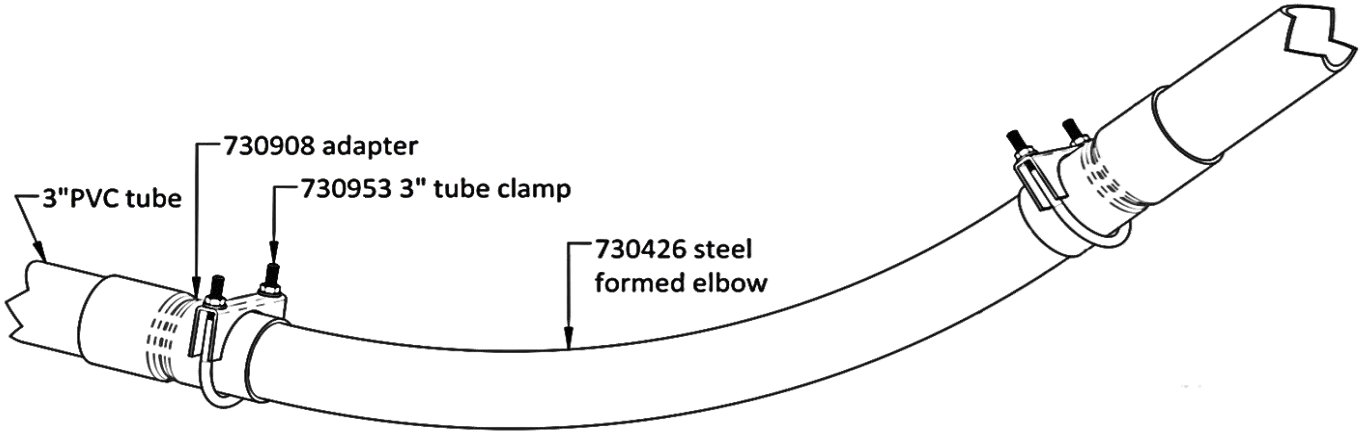

MODEL 735 - 3.5"

CATALOG #	ITEM DESCRIPTION	SHIP WEIGHT LBS.	SHIP WEIGHT KG.	LIST PRICE
724401	3.5" Steel Tube Clamp (Requires 1 per straight tube)	0.8	0.4	
724402	4" U-bolt Clamp (for clamping PVC Bell/Splice to Steel Tube)	0.9	0.4	
735426	3.5" X 45 Degree Steel Tube with NO Bell (Coupler Required)	11.0	5.0	
735902	3.5" X 10' Steel Tube with Bell	25.0	72.6	
735904	3.5" Steel Tube Coupler with (2) Clamps	2.2	1.0	

735 tube can interchange between PVC and steel. Due to tight fitment, it may be required to cut slots in the belled end of PVC/PVC splice to fit overtop of the steel 735 tube. Use 724401 for clamping steel bell/coupler. Use 724402 for clamping the PVC bell/PVC splice."

Toll-free: 1-800-99VALCO
Phone: (+1) 419-678-8731
Fax: (+1) 419-678-2200

FLEXIBLE AUGER

MODEL 720 FLEXIBLE AUGER

CATALOG #	ITEM DESCRIPTION	SHIP WEIGHT LBS.	SHIP WEIGHT KG.	LIST PRICE
720440-0040	40', 1.52" O.D. Auger - Model 720 Systems	20.8	9.4	
720440-0050	50', 1.52" O.D. Auger - Model 720 Systems	26.0	11.8	
720440-0060	60', 1.52" O.D. Auger - Model 720 Systems	31.2	14.2	
720440-0070	70', 1.52" O.D. Auger - Model 720 Systems	36.4	16.5	
720440-0080	80', 1.52" O.D. Auger - Model 720 Systems	41.6	18.9	
720440-0090	90', 1.52" O.D. Auger - Model 720 Systems	46.8	21.2	
720440-0100	100', 1.52" O.D. Auger - Model 720 Systems	52.0	23.6	
720440-0110	100', 1.52" O.D. Auger - Model 720 Systems	57.2	25.9	
720440-0120	120', 1.52" O.D. Auger - Model 720 Systems	62.4	28.3	
720440-0130	130', 1.52" O.D. Auger - Model 720 Systems	67.6	30.7	
720440-0140	140', 1.52" O.D. Auger - Model 720 Systems	72.8	33.0	
720440-0150	150', 1.52" O.D. Auger - Model 720 Systems	78.0	35.4	
720440-0160	160', 1.52" O.D. Auger - Model 720 Systems	83.2	37.7	
720440-0170	170', 1.52" O.D. Auger - Model 720 Systems	88.4	40.1	
720440-0180	180', 1.52" O.D. Auger - Model 720 Systems	93.6	42.5	
720440-0190	190', 1.52" O.D. Auger - Model 720 Systems	115.8	52.5	
720440-0200	200', 1.52" O.D. Auger - Model 720 Systems	104.0	47.2	
720440-0210	210', 1.52" O.D. Auger - Model 720 Systems	109.2	49.5	
720440-0220	220', 1.52" O.D. Auger - Model 720 Systems	114.4	51.9	
720440-0230	230', 1.52" O.D. Auger - Model 720 Systems	119.6	54.3	
720440-0240	240', 1.52" O.D. Auger - Model 720 Systems	124.8	56.6	
720440-0250	250', 1.52" O.D. Auger - Model 720 Systems	130.0	59.0	
720440-0260	260', 1.52" O.D. Auger - Model 720 Systems	135.2	61.3	
720440-0270	270', 1.52" O.D. Auger - Model 720 Systems	140.4	63.7	
720440-0280	280', 1.52" O.D. Auger - Model 720 Systems	145.6	66.0	
720440-0290	290', 1.52" O.D. Auger - Model 720 Systems	150.8	68.4	
720440-0300	300', 1.52" O.D. Auger - Model 720 Systems	160.0	72.6	
720440-0400	400', 1.52" O.D. Auger - Model 720 Systems	220.0	99.8	
720440-1500	Skid of 5 - 300' Rolls of 720440 Auger	780.0	353.8	
720440-3000	Flexible Auger, 1.52OD, 3000 FT On Reel	1,600.0	725.8	
720440-5000	Flexible Auger, 1.52OD, 5000 FT On Reel	2,675.0	1213.4	

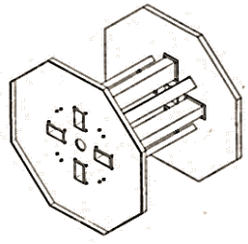

AUGER REEL NOTES

3000 & 5000 feet of 1.52 OD auger shipped on reel.

Price includes the auger reel.

Auger reels will be credited $550 upon return in **good** condition.

Toll-free: 1-800-99VALCO
Phone: (+1) 419-678-8731
Fax: (+1) 419-678-2200

FLEXIBLE AUGER

MODEL 725 "PELLET" FLEXIBLE AUGER

CATALOG #	ITEM DESCRIPTION	SHIP WEIGHT LBS.	SHIP WEIGHT KG.	LIST PRICE
725440-0040	40' 2.25" O.D. Auger - Model 725 Systems	41.2	18.7	
725440-0050	50' 2.25" O.D. Auger - Model 725 Systems	51.5	23.4	
725440-0060	60' 2.25" O.D. Auger - Model 725 Systems	61.8	28.0	
725440-0070	70' 2.25" O.D. Auger - Model 725 Systems	72.1	32.7	
725440-0080	80' 2.25" O.D. Auger - Model 725 Systems	82.4	37.4	
725440-0090	90' 2.25" O.D. Auger - Model 725 Systems	92.7	42.0	
725440-0100	100' 2.25" O.D. Auger - Model 725 Systems	103.0	46.7	
725440-0110	110' 2.25" O.D. Auger - Model 725 Systems	113.3	51.4	
725440-0120	120' 2.25" O.D. Auger - Model 725 Systems	123.6	56.1	
725440-0130	130' 2.25" O.D. Auger - Model 725 Systems	133.9	60.7	
725440-0140	140' 2.25" O.D. Auger - Model 725 Systems	144.2	65.4	
725440-0150	150' 2.25" O.D. Auger - Model 725 Systems	154.5	70.1	
725440-0160	160' 2.25" O.D. Auger - Model 725 Systems	164.8	74.8	
725440-0170	170' 2.25" O.D. Auger - Model 725 Systems	175.1	79.4	
725440-0180	180' 2.25" O.D. Auger - Model 725 Systems	185.0	83.9	
725440-0190	190' 2.25" O.D. Auger - Model 725 Systems	195.7	88.8	
725440-0200	200' 2.25" O.D. Auger - Model 725 Systems	206.0	93.4	
725440-0210	210' 2.25" O.D. Auger - Model 725 Systems	216.3	98.1	
725440-0220	220' 2.25" O.D. Auger - Model 725 Systems	226.6	102.8	
725440-0230	230' 2.25" O.D. Auger - Model 725 Systems	236.9	107.5	
725440-0240	240' 2.25" O.D. Auger - Model 725 Systems	247.2	112.1	
725440-0250	250' 2.25" O.D. Auger - Model 725 Systems	257.5	116.8	
725440-0260	260' 2.25" O.D. Auger - Model 725 Systems	267.8	121.5	
725440-0270	270' 2.25" O.D. Auger - Model 725 Systems	278.1	126.1	
725440-0280	280' 2.25" O.D. Auger - Model 725 Systems	288.4	130.8	
725440-0290	290' 2.25" O.D. Auger - Model 725 Systems	298.7	135.5	
725440-0300	300' 2.25" O.D. Auger - Model 725 Systems	309.0	140.2	
725440-1500	Skid of 5 - 300' Rolls of 720440 Auger	1,542.0	699.5	
725440-2100	Skid of 7 - 300' Rolls of 720440 Auger	2,215.0	1004.7	
725440-3000	Flexible Auger, 2.25OD, 3000 Ft On Reel	3,090.0	1401.6	

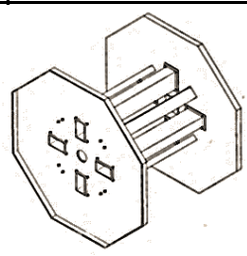

AUGER REEL NOTES

3000 feet of 1.52 OD auger shipped on reel.

Price includes the auger reel.

Auger reels will be credited $550 upon return in **good**

Toll-free: 1-800-99VALCO
Phone: (+1) 419-678-8731
Fax: (+1) 419-678-2200

FLEXIBLE AUGER

MODEL 730 FLEXIBLE AUGER

CATALOG #	ITEM DESCRIPTION	SHIP WEIGHT LBS.	SHIP WEIGHT KG.	LIST PRICE
730440-0040	40' 2.38" O.D. Auger - Model 730 and Model 735HM Systems	39.2	17.8	
730440-0050	50' 2.38" O.D. Auger - Model 730 and Model 735HM Systems	49.0	22.2	
730440-0060	60' 2.38" O.D. Auger - Model 730 and Model 735HM Systems	58.8	26.7	
730440-0070	70' 2.38" O.D. Auger - Model 730 and Model 735HM Systems	68.6	31.1	
730440-0080	80' 2.38" O.D. Auger - Model 730 and Model 735HM Systems	78.4	35.6	
730440-0090	90' 2.38" O.D. Auger - Model 730 and Model 735HM Systems	88.2	40.0	
730440-0100	100' 2.38" O.D. Auger - Model 730 and Model 735HM Systems	98.0	44.5	
730440-0110	110' 2.38" O.D. Auger - Model 730 and Model 735HM Systems	107.8	48.9	
730440-0120	120' 2.38" O.D. Auger - Model 730 and Model 735HM Systems	118.0	53.5	
730440-0130	130' 2.38" O.D. Auger - Model 730 and Model 735HM Systems	127.4	57.8	
730440-0140	140' 2.38" O.D. Auger - Model 730 and Model 735HM Systems	137.2	62.2	
730440-0150	150' 2.38" O.D. Auger - Model 730 and Model 735HM Systems	147.0	66.7	
730440-0160	160' 2.38" O.D. Auger - Model 730 and Model 735HM Systems	156.8	71.1	
730440-0170	170' 2.38" O.D. Auger - Model 730 and Model 735HM Systems	166.6	75.6	
730440-0180	180' 2.38" O.D. Auger - Model 730 and Model 735HM Systems	176.4	80.0	
730440-0190	190' 2.38" O.D. Auger - Model 730 and Model 735HM Systems	186.2	84.5	
730440-0200	200' 2.38" O.D. Auger - Model 730 and Model 735HM Systems	183.1	83.1	
730440-0210	210' 2.38" O.D. Auger - Model 730 and Model 735HM Systems	205.8	93.4	
730440-0220	220' 2.38" O.D. Auger - Model 730 and Model 735HM Systems	215.6	97.8	
730440-0230	230' 2.38" O.D. Auger - Model 730 and Model 735HM Systems	225.4	102.2	
730440-0240	240' 2.38" O.D. Auger - Model 730 and Model 735HM Systems	235.2	106.7	
730440-0250	250' 2.38" O.D. Auger - Model 730 and Model 735HM Systems	277.0	125.6	
730440-0260	260' 2.38" O.D. Auger - Model 730 and Model 735HM Systems	254.8	115.6	
730440-0270	270' 2.38" O.D. Auger - Model 730 and Model 735HM Systems	264.6	120.0	
730440-0280	280' 2.38" O.D. Auger - Model 730 and Model 735HM Systems	274.4	124.5	
730440-0290	290' 2.38" O.D. Auger - Model 730 and Model 735HM Systems	284.2	128.9	
730440-0300	300' 2.38" O.D. Auger - Model 730 and Model 735HM Systems	301.0	136.5	
730440-1500	Skid of 5 - 300' Rolls of 730440 Auger	1,490.0	675.9	
730440-2100	Skid of 7 - 300' Rolls of 730440 Auger	2,090.0	948.0	
730440-2700	Flexible Auger, 2.38 OD, 2700 Ft On Reel	2,646.0	1200.2	
730440-3000	Flexible Auger, 2.38 OD, 3000 Ft On Reel	3,824.0	1734.6	

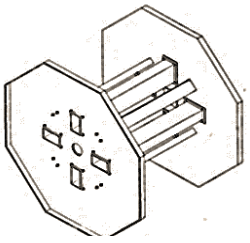

AUGER REEL NOTES

3000 feet of 2.38 OD auger shipped on reel.

Price includes the auger reel.

Auger reels will be credited $550 upon return in **good** condition.

Toll-free: 1-800-99VALCO
Phone: (+1) 419-678-8731
Fax: (+1) 419-678-2200

FLEXIBLE AUGER

MODEL 735 FLEXIBLE AUGER

CATALOG #	ITEM DESCRIPTION	SHIP WEIGHT LBS.	SHIP WEIGHT KG.	LIST PRICE
735440-0040	40' 2.71" O.D. Auger - Model 735HV Systems	35.2	16.0	
735440-0050	50' 2.71" O.D. Auger - Model 735HV Systems	44.0	20.0	
735440-0060	60' 2.71" O.D. Auger - Model 735HV Systems	61.5	27.9	
735440-0070	70' 2.71" O.D. Auger - Model 735HV Systems	69.0	31.3	
735440-0080	80' 2.71" O.D. Auger - Model 735HV Systems	75.0	34.0	
735440-0090	90' 2.71" O.D. Auger - Model 735HV Systems	79.2	35.9	
735440-0100	100' 2.71" O.D. Auger - Model 735HV Systems	88.0	39.9	
735440-0110	110' 2.71" O.D. Auger - Model 735HV Systems	96.8	43.9	
735440-0120	120' 2.71" O.D. Auger - Model 735HV Systems	106.0	48.1	
735440-0130	130' 2.71" O.D. Auger - Model 735HV Systems	114.4	51.9	
735440-0140	140' 2.71" O.D. Auger - Model 735HV Systems	123.2	55.9	
735440-0150	150' 2.71" O.D. Auger - Model 735HV Systems	132.0	59.9	
735440-0160	160' 2.71" O.D. Auger - Model 735HV Systems	140.8	63.9	
735440-0170	170' 2.71" O.D. Auger - Model 735HV Systems	149.6	67.9	
735440-0180	180' 2.71" O.D. Auger - Model 735HV Systems	158.4	71.9	
735440-0190	190' 2.71" O.D. Auger - Model 735HV Systems	167.2	75.8	
735440-0200	200' 2.71" O.D. Auger - Model 735HV Systems	200.0	90.7	
735440-0210	210' 2.71" O.D. Auger - Model 735HV Systems	184.8	83.8	
735440-0220	220' 2.71" O.D. Auger - Model 735HV Systems	193.6	87.8	
735440-0230	230' 2.71" O.D. Auger - Model 735HV Systems	202.4	91.8	
735440-0240	240' 2.71" O.D. Auger - Model 735HV Systems	211.1	95.8	
735440-0250	250' 2.71" O.D. Auger - Model 735HV Systems	220.0	99.8	
735440-0260	260' 2.71" O.D. Auger - Model 735HV Systems	228.8	103.8	
735440-0270	270' 2.71" O.D. Auger - Model 735HV Systems	237.6	107.8	
735440-0280	280' 2.71" O.D. Auger - Model 735HV Systems	246.4	111.8	
735440-0290	290' 2.71" O.D. Auger - Model 735HV Systems	255.2	115.8	
735440-0300	300' 2.71 O.D. Auger - Model 735HV Systems	264.0	119.8	
735440-1500	Skid of 5 - 300' Rolls of 735440 Auger	1,365.0	619.2	
735440-2100	Skid of 7 - 300' Rolls of 735440 Auger	1,910.0	866.4	
735440-2700	Flexible Auger, 2.71 OD, 2700 Ft On Reel	2,700.0	1224.7	

MODEL 735 - 3.5" STEEL TUBES (Typically used for layer feed.)

735426	3.5" 45 Degree Steel Elbow	11.0	5.0	
735902	3.5" 10' Straight Steel Tube	25.0	11.3	
735904	3.5" Steel Tube Coupler with Clamps	2.2	1.0	
724401	3.5" Steel Tube Clamp (1 required for each straight tube)	0.8	0.4	

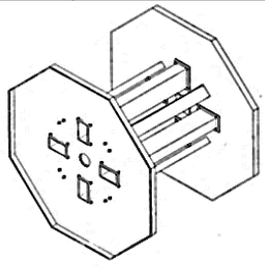

AUGER REEL NOTES

2700 feet of 2.71 OD auger shipped on reel.

Price includes the auger reel.

Auger reels will be credited $550 upon return in **good** condition.

Toll-free: 1-800-99VALCO
Phone: (+1) 419-678-8731
Fax: (+1) 419-678-2200

MODEL 720/725/730 DROP OUTLETS & DOWNSPOUT TUBES

MODEL 720 - 2.25" DROP OUTLETS

CATALOG #	ITEM DESCRIPTION	SHIP WEIGHT LBS.	SHIP WEIGHT KG.	LIST PRICE
720550	2.25" All-Out Poly Drop with Shutoff	1.3	0.6	
720555	Carton of 10 - 720550 All-Out Poly Drops	9.0	4.1	

MODEL 725 / 730 - 3" DROP OUTLETS

CATALOG #	ITEM DESCRIPTION	SHIP WEIGHT LBS.	SHIP WEIGHT KG.	LIST PRICE
730550	3" All-Out Poly Drop with Shutoff	1.3	0.6	
730555	Carton of 10 - 730550 All-Out Poly Drops	9.0	4.1	

MODEL 720 / 725 / 730 DOWNSPOUT TUBES & ACCESSORIES

CATALOG #	ITEM DESCRIPTION	SHIP WEIGHT LBS.	SHIP WEIGHT KG.	LIST PRICE
730615	3" I.D. x 12' Translucent Plastic Downspout Tube	3.8	1.4	
730289	3.25" I.D. x 12' Telescoping Plastic Downspout Tube	4.0	1.8	
730480	3" I.D. Flexible Rubber Downspout Tube - 25' Length	14.8	6.7	
730449	3" I.D. Flexible Rubber Downspout Tube - 18" (46cm)	0.4	0.2	
730201	Drop Tube Wire Clip	0.1	0.0	
730431	3" Stainless Steel Downspout Clamp	0.1	0.0	
730437	3" Plastic Y Fitting for Downspout Tube	0.4	0.2	
730438	3" Plastic 45 Degree Fitting for Downspout Tube	0.2	0.1	
730439	3" Downspout Sleeve Connector	0.1	0.0	
690291	TEK Screw #10 - 16 X 3/4	0.0	0.0	
730485	3" Downspout SurFit Adapter	0.1	0.0	

For more information on drop outlet components see page 04-15

MODEL 720/730 DROP OUTLETS & DOWNSPOUT TUBES

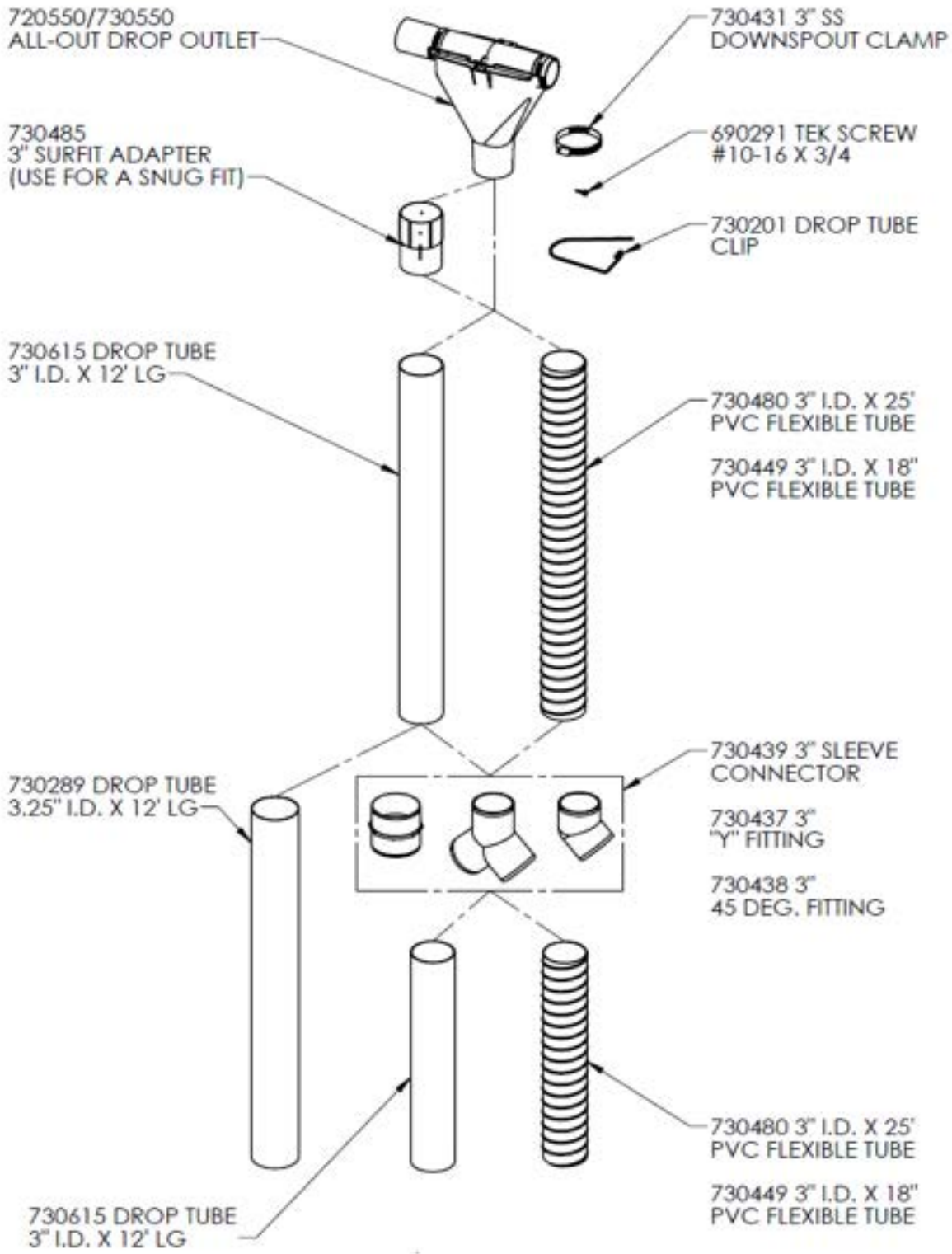

See page 04-14 for drop tube pricing

Toll-free: 1-800-99VALCO
Phone: (+1) 419-678-8731
Fax: (+1) 419-678-2200

MODEL 735 DROP OUTLETS & DOWNSPOUT TUBES

MODEL 735 - 3.5" DROP OUTLETS

CATALOG #	ITEM DESCRIPTION	SHIP WEIGHT LBS.	SHIP WEIGHT KG.	LIST PRICE
735550	3.5" All-Out Poly Drop with Shutoff	1.3	0.6	
735555	Carton of 10 - 735550 All-Out Poly Drops	9.7	4.4	

MODEL 735 DOWNSPOUT TUBES & ACCESSORIES

CATALOG #	ITEM DESCRIPTION	SHIP WEIGHT LBS.	SHIP WEIGHT KG.	LIST PRICE
735485	3.5" Sur-Fit Adapter (Use for snug fit)	0.1	0.1	
735615	3.5" I.D. x 12' Translucent Plastic Downspout Tube	4.0	1.8	
735289	3.75" I.D. x 12' Telescoping Translucent Plastic Downspout Tube	5.8	2.6	
735680	3.5" I.D. x 25' Length Roll Flexible PVC Downspout Tube	13.3	6.0	
735682	3.5" I.D. Flexible PVC Downspout Tube - 18" (46cm)	0.6	0.3	
735439	3.5" Downspout Sleeve Connector	0.1	0.1	
690291	TEK Screw #10 - 16 X 3/4	0.0	0.0	
730201	Drop Tube Wire Clip	0.1	0.0	
735431	3.5" Stainless Steel Downspout Clamp	0.1	0.0	

For more information on drop outlet components see page 04-17

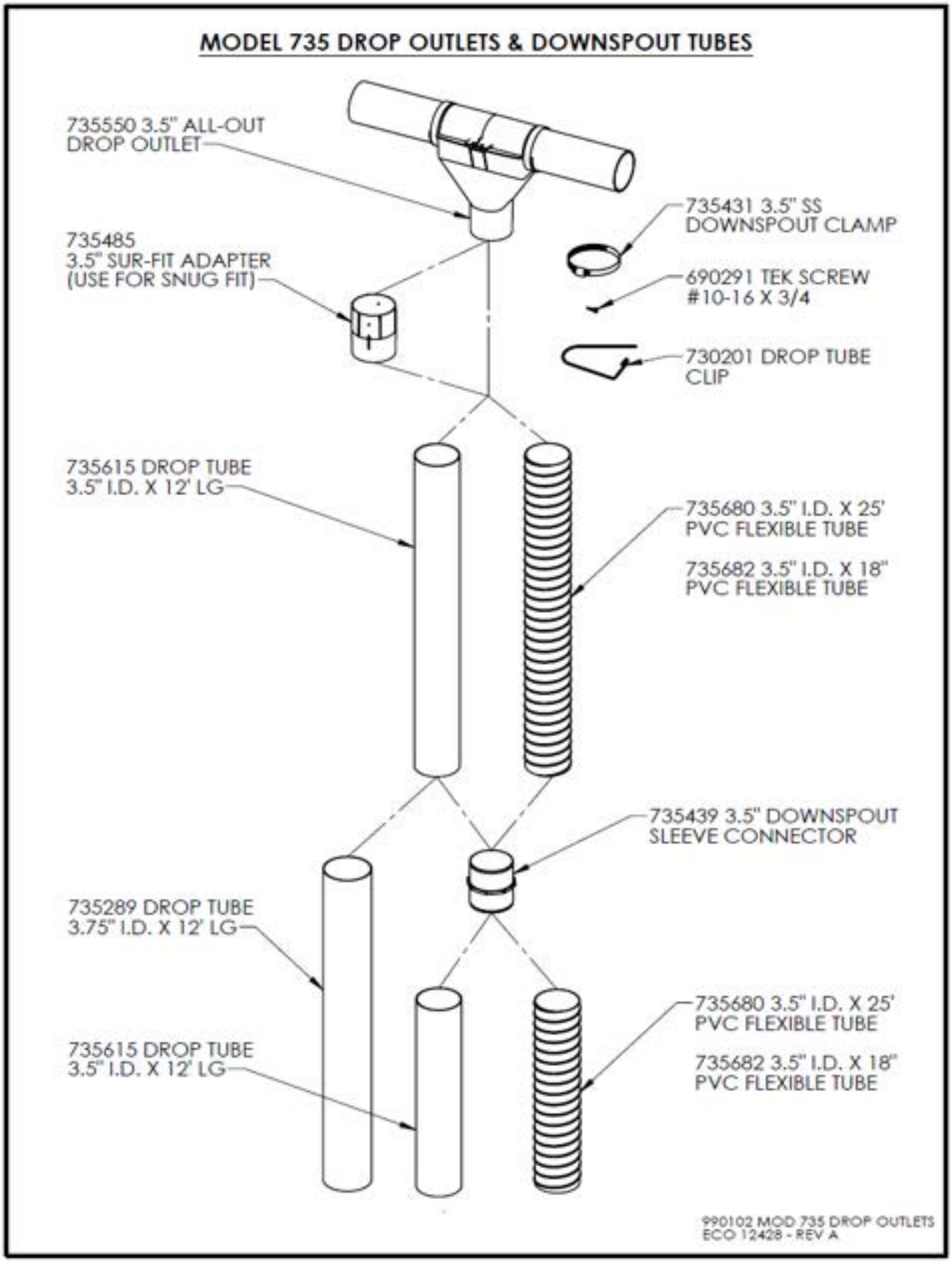

See page 04-16 for drop tube pricing

Toll-free: 1-800-99VALCO
Phone: (+1) 419-678-8731
Fax: (+1) 419-678-2200

DISCHARGE HEADS

TO ORDER A COMPLETE DRIVE UNIT

DIRECT DRIVE UNIT
Order a steel (below) or poly (page 04-20 thru 04-22) discharge head kit and port & driver kit from page 04-23. Also order a direct drive motor & gearbox unit from pages 04-24 thru 04-25.

V-BELT DRIVE UNIT
Order a steel discharge head kit below (do NOT use poly head). Order v-belt drive unit (page 04-25) & a farm duty motor from catalog section 20. Order port & driver kit from page 04-23.

STEEL DISCHARGE HEAD KITS

	CATALOG #	ITEM DESCRIPTION	SHIP WEIGHT LBS.	SHIP WEIGHT KG.	LIST PRICE
SINGLE PHASE	730531	Steel Discharge Head Kit - Relay Control - For use in 1PH applications only - Shipped in two cartons: (1) 730462 Basic Steel Head (1) 730501 Control Box - 1PH Motor Relay included	6.5	2.9	
SINGLE PHASE	730731	Stainless Steel Discharge Head Kit - Relay Control	8.3	3.7	
SINGLE PHASE	730532	Steel Discharge Head Kit - Relay Control & Proximity Sensor - For use in 1PH applications only - Shipped in three cartons: (1) 730462 Basic Steel Head (1) 730501 Control Box - 1PH Motor Relay included (1) 730465 Proximity Sensor	7.7	3.5	
SINGLE PHASE	730732	Stainless Steel Discharge Head Kit - Relay Control & Prox. Sensor	8.7	3.9	
3-PHASEor SINGLE PHASE	730533	Steel Discharge Head Kit - Basic Control - For use in 1 or 3PH phase applications - Shipped in two cartons: (1) 730462 Basic Steel Head (1) 730505 Control Box - Motor Relay Not Included	6.5	2.9	
3-PHASEor SINGLE PHASE	730733	Stainless Steel Discharge Head Kit - Basic Control	8.1	3.7	
3-PHASEor SINGLE PHASE	730534	Steel Discharge Head Kit - Basic Unit & Proximity Sensor - For use in 1 or 3PH applications - Shipped in three cartons: (1) 730462 Basic Steel Head (1) 730505 Control Box - Motor Relay Not Included (1) 730465 Proximity Sensor	7.7	3.5	
3-PHASEor SINGLE PHASE	730734	Stainless Steel Discharge Head Kit - Basic Unit & Proximity Sensor	8.5	3.9	

Mechanical back-up safety switch is included with all control options.
Proximity or mechanical feed level sensing may be used with all controls.
- *See catalog section 04-26 for feed level sensing options*

Customer must provide motor relay for all basic controls
See page 04-22 for more details on the steel discharge head

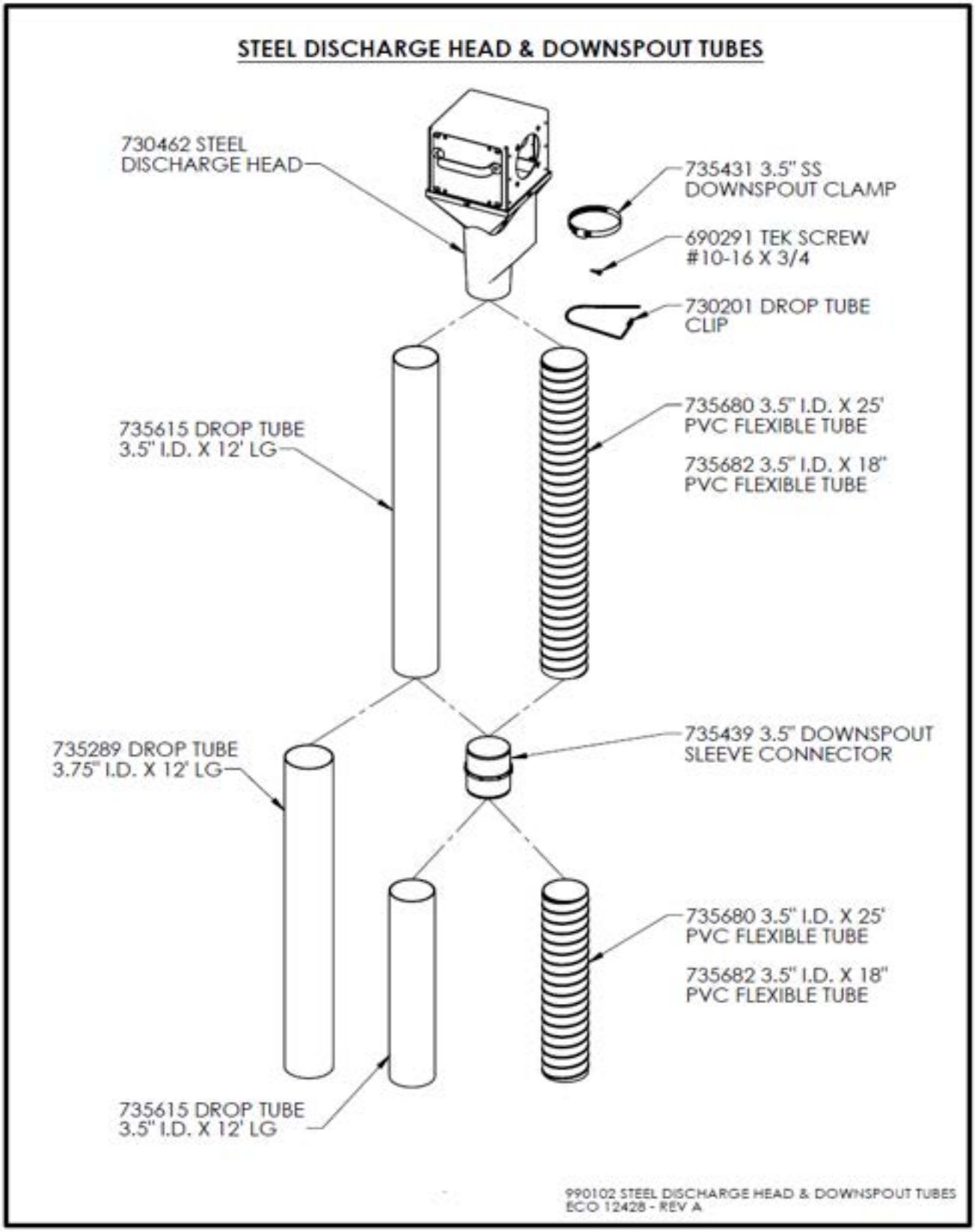

See page 04-16 for drop tube pricing

Toll-free: 1-800-99VALCO
Phone: (+1) 419-678-8731
Fax: (+1) 419-678-2200

DISCHARGE HEADS

POLY DISCHARGE HEAD KITS

Metal components will be Steel (Galv.) or Stainless Steel (SS)

	CATALOG #		ITEM DESCRIPTION	SHIP WEIGHT LBS.	SHIP WEIGHT KG.	LIST PRICE
SINGLE PHASE	730538	Galv.	Poly Discharge Head Kit - Basic Control - For use in 1 or 3PH applications - Shipped in two cartons: (1) 730463 Basic Poly Head (Galv.) or (1) 730575 Basic Poly Head (SS) (1) 730501 Control Box - Motor Relay Not Included	7.1	3.2	
	730578	SS		6.3	2.9	
	730539	Galv.	Poly Discharge Head Kit - Basic Unit & Proximity Sensor - For use in 1 or 3PH applications - Shipped in three cartons: (1) 730463 Basic Poly Head (Galv.) or (1) 730575 Basic Poly Head (SS) (1) 730505 Control Box - Motor Relay Not Included (1) 730465 Proximity Sensor	8.3	3.8	
	730579	SS		6.7	3.0	
	730536	Galv.	Poly Discharge Head Kit - Relay Control - For use in 1PH applications only - Shipped in two cartons: (1) 730463 Basic Poly Head (Galv.) or (1) 730575 Basic Poly Head (SS) (1) 730501 Control Box - 1PH Motor Relay included	7.1	3.2	
	730576	SS		6.5	2.9	
	730537	Galv.	Poly Discharge Head Kit - Relay Control & Proximity Sensor - For use in 1PH applications only - Shipped in three cartons: (1) 730463 Basic Poly Head (Galv.) or (1) 730575 Basic Poly Head (SS) (1) 730501 Control Box - 1PH Motor Relay included (1) 730465 Proximity Sensor	8.3	3.8	
	730577	SS		6.9	3.1	
3-PHASE	730538	Galv.	Poly Discharge Head Kit - Basic Control - For use in 1 or 3PH phase applications - Shipped in two cartons: (1) 730463 Basic Poly Head (Galv.) or (1) 730575 Basic Poly Head (SS) (1) 730505 Control Box - Motor Relay Not Included	7.1	3.2	
	730578	SS		6.3	2.9	
	730539	Galv.	Poly Discharge Head Kit - Basic Unit & Proximity Sensor - For use in 1 or 3PH applications - Shipped in three cartons: (1) 730463 Basic Poly Head (Galv.) or (1) 730575 Basic Poly Head (SS) (1) 730505 Control Box - Motor Relay Not Included (1) 730465 Proximity Sensor	8.3	3.8	
	730579	SS		6.7	3.0	

Mechanical back-up safety switch is included with all control options.
Proximity or mechanical feed level sensing may be used with all controls.
- *See catalog section 04-26 for feed level sensing options*

Customer must provide motor relay for all basic controls
See page 04-22 for more details on the poly discharge head

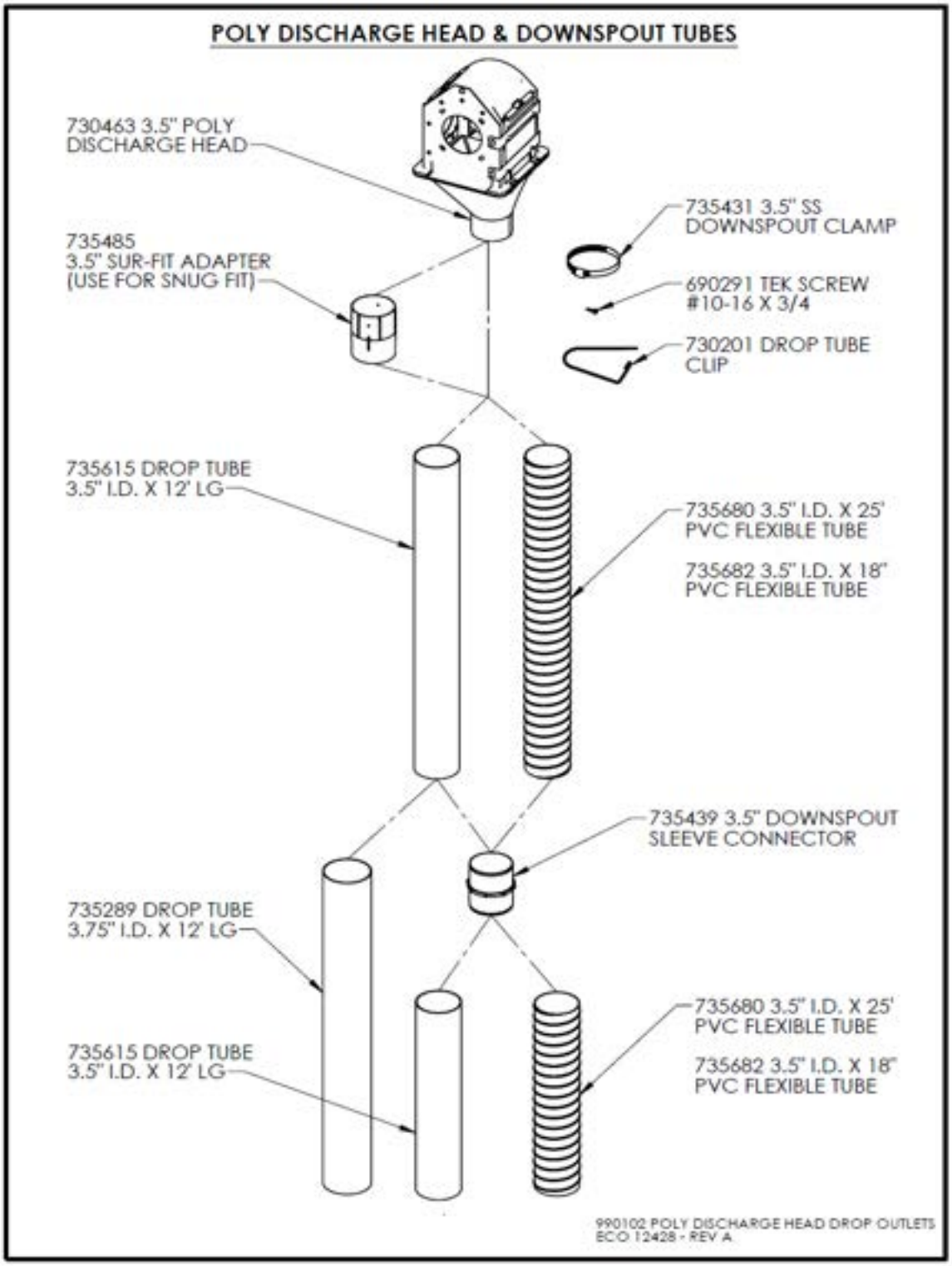

See page 04-16 for drop tube pricing

Toll-free: 1-800-99VALCO
Phone: (+1) 419-678-8731
Fax: (+1) 419-678-2200

DISCHARGE HEADS

DISCHARGE HEAD KIT COMPONENT REQUIREMENTS COMPONENT ➔ / CATALOG NUMBER & DESCRIPTION ➔		KIT COMPONENTS & QUANTITY REQUIRED					
		BASIC DISCHARGE HEAD			ELECTRICAL CONTROL BOX		PROXIMITY SENSOR
		730462 Basic Steel Head	730463 Basic Poly Head (Galv.)	730575 Basic Poly Head (SS)	730505 1 or 3 Phase No Relay	730501 1 Phase with Relay	730465 Proximity Switch with Mount
CATALOG # OF DH KIT	DESCRIPTION OF DISCHARGE HEAD KIT	QUANTITY REQUIRED					
STEEL DISCHARGE HEAD KITS							
730533	D.H., Basic Control	1			1		
730534	D.H., Basic Control, Prox. Sensor	1			1		1
730531	D.H., Relay Control	1				1	
730532	D.H., Relay Control, Prox. Sensor	1				1	1
POLY DISCHARGE HEAD KITS (Galv.)							
730538	D.H., Basic Control		1		1		
730539	D.H., Basic Control, Prox. Sensor		1		1		1
730536	D.H., Relay Control		1			1	
730537	D.H., Relay Control, Prox. Sensor		1			1	1
POLY DISCHARGE HEAD KITS (SS)							
730578	D.H., Basic Control			1	1		
730579	D.H., Basic Control, Prox. Sensor			1	1		1
730576	D.H., Relay Control			1		1	
730577	D.H., Relay Control, Prox. Sensor			1		1	1

DISCHARGE HEAD KIT COMPONENTS

CATALOG #	ITEM DESCRIPTION	SHIP WEIGHT LBS.	SHIP WEIGHT KG.	LIST PRICE
730462	Basic Steel Discharge Head	7.8	3.5	
730463	Basic Poly Discharge Head (Galvanized Components)	5.4	2.4	
730575	Basic Poly Discharge Head (Stainless Steel Components)	4.1	1.9	
730750	Basic Stainless Steel Discharge Head	6.5	2.9	
730486	Discharge Head - Gasket Replacement Kit	1.3	0.6	
730505	Basic Control Box - Motor Relay Not Included - For Single or Three Phase Applications	2.3	1.0	
730501	Relay Control Box - 1PH Motor Relay Included - For Single Phase Applications Only	2.6	1.2	
731040	Relay Control Box with AP Discharge Head Mounting Plate Adapter Kit - 1PH Motor Relay Included - For Single Phase Applications Only	3.3	1.5	
730465	Proximity Switch with Mount & Hardware	0.9	0.4	

PORT & DRIVER KITS

FOR STEEL DISCHARGE HEAD

PORT & DRIVER KITS FOR STEEL DISCHARGE HEAD
FOR DIRECT DRIVE WITH 7/8" OUTPUT SHAFT

CATALOG #	ITEM DESCRIPTION	SHIP WEIGHT LBS.	SHIP WEIGHT KG.	LIST PRICE
720304	2.25" Port & Driver Kit for Direct Drive Unit - 7/8" Bore Driver	3.4	1.6	
725304	3" Port & 725 Driver Kit for Direct Drive Unit - 7/8" Bore Driver	3.8	1.7	
725320	3" Port & 725 Driver Kit for Direct Drive Unit SS - 7/8" Bore Driver	3.5	1.6	
730304	3" Port & Driver Kit for Direct Drive Unit - 7/8" Bore Driver	3.6	1.6	
731035	3" Port & Driver Kit for Direct Drive Unit Stainless Steel - 7/8" Bore Driver	4.2	1.9	
735305	3.5" HV Port & Driver Kit for Direct Drive Unit - 7/8" Bore Driver	4.9	2.2	
735304	3.5" HM Port & Driver Kit for Direct Drive Unit - 7/8" Bore Driver	3.9	1.8	

PORT & DRIVER KITS FOR STEEL DISCHARGE HEAD
FOR BELT DRIVE WITH 5/8" OUTPUT SHAFT

CATALOG #	ITEM DESCRIPTION	SHIP WEIGHT LBS.	SHIP WEIGHT KG.	LIST PRICE
720049	2.25" Port & Driver Kit - 5/8" Bore Driver	2.1	1.0	
730050	3" Port & Driver Kit - 5/8" Bore Driver	3.7	1.7	
735049	3.5" HV Port & Driver Kit - 5/8" Bore Driver	5.1	2.3	
735100	3.5" HM Port & Driver Kit - 5/8" Bore Driver	4.1	1.9	

FOR POLY DISCHARGE HEAD

PORT & DRIVER KITS FOR POLY DISCHARGE HEAD
FOR DIRECT DRIVE WITH 7/8" OUTPUT SHAFT

CATALOG #	ITEM DESCRIPTION	SHIP WEIGHT LBS.	SHIP WEIGHT KG.	LIST PRICE
720464	2.25" Port & Driver Kit for Direct Drive Unit - 7/8" Bore Driver	2.8	1.3	
725464	3" Port & 725 Driver Kit for Direct Drive Unit - 7/8" Bore Driver	3.3	1.5	
730464	3" Port & Driver Kit for Direct Drive Unit - 7/8" Bore Driver	3.0	1.4	
735466	3.5" HV Port & Driver Kit for Direct Drive Unit - 7/8" Bore Driver	4.5	2.0	
735480	3.5" HM Port & Driver Kit for Direct Drive Unit - 7/8" Bore Driver	3.5	1.6	

Toll-free: 1-800-99VALCO
Phone: (+1) 419-678-8731
Fax: (+1) 419-678-2200

DIRECT DRIVE MOTOR AND GEARBOXES

1 PHASE - 7/8" OUTPUT SHAFTS

	Electrical Info	115V, 50HZ, 1PH	115V, 60HZ, 1PH	230V, 50HZ, 1PH	230V, 60HZ, 1PH	OUTPUT SPEED (50/60HZ) -->	GEARBOX -->	
	VOLTS	115	115	230	230			
	HERTZ	50	60	50	60			
	PHASE	1	1	1	1			
HP	0.50	720325	720325	720325	720325	156/189	730123	Drive Output RPMs are approximate based on motor RPMs of 1425 @ 50Hz and 1725 @ 60 Hz. (Actual Output RPM's may vary)
HP	0.75	720326	720326	720326	720326			
HP	1.0	720327	720327	720327	720327			
HP	1.5		720328		720328			
HP	0.50	730315	730315	730315	730315	220/266	730093	
HP	0.75	730316	730316	730316	730316			
HP	1.0	735532	730317	735532	730317			
HP	1.5	735533	730318	735533	730318			
HP	0.50	735380	735380	735380	735380	296/359	730089	
HP	0.75	735381	735381	735381	735381			
HP	1.0	735527	735382	735527	735382			
HP	1.5	735528	735383	735528	735383			
HP	0.50	735360	735360	735360	735360	365/441	730124	
HP	0.75	735361	735361	735361	735361			
HP	1.0	735342	735362	735342	735362			
HP	1.5	735343	735363	735343	735363			

For pricing, see page 04-25
More electrical options and speeds are available upon request

DIRECT DRIVE MOTOR AND GEARBOXES

3 PHASE - 7/8" OUTPUT SHAFTS

	Electrical Info	230V, 60HZ, 3PH	460V, 60HZ, 3PH	190V, 50HZ, 3PH	380V, 50HZ, 3PH	OUTPUT SPEED (50/60HZ) -->	GEARBOX -->	
	VOLTS	230	460	190	380			
	HERTZ	60	60	50	50			
	PHASE	3	3	3	3			
HP	0.50	735520	735520	735520	735520	156/189	730123	Drive Output RPMs are approximate based on motor RPMs of 1425 @ 50Hz and 1725 @ 60 Hz. (Actual Output RPM's may vary)
HP	0.75	735521	735521	735521	735521			
HP	1.0	735522	735522	735522	735522			
HP	1.5	735523	735523	735523	735523			
HP	0.50	735515	735515	735515	735515	220/266	730093	
HP	0.75	735516	735516	735516	735516			
HP	1.0	735517	735517	735517	735517			
HP	1.5	735518	735518	735518	735518			
HP	0.50	735330	735330	735330	735330	296/359	730089	
HP	0.75	735331	735331	735331	735331			
HP	1.0	735332	735332	735332	735332			
HP	1.5	735333	735333	735333	735333			
HP	0.50	735510	735510	735510	735510	365/441	730124	
HP	0.75	735511	735511	735511	735511			
HP	1.0	735512	735512	735512	735512			
HP	1.5	735513	735513	735513	735513			

For pricing, see page 04-25
More electrical options and speeds are available upon request

Toll-free: 1-800-99VALCO
Phone: (+1) 419-678-8731
Fax: (+1) 419-678-2200

DIRECT DRIVE MOTOR & GEARBOX UNITS - 7/8" OUTPUT SHAFT

CATALOG #	ITEM DESCRIPTION	SHIP WEIGHT LBS.	SHIP WEIGHT KG.	LIST PRICE
720325	DRIVE, .50HP,156/189RPM,7/8SH,115/230V,50/60H,1P	50.0	22.7	
720326	DRIVE,.75HP,156/189RPM,7/8SH,115/230V,50/60H,1P	53.0	24.0	
720327	DRIVE,1.0HP,189RPM,7/8SH,115/208-230V,60H,1P	58.5	26.5	
720328	DRIVE,1.5HP,189RPM,7/8SH,115/230V,60H,1P	80.0	36.3	
730315	DRIVE,.50HP,220/266RPM,7/8SH,115/230V,50/60H,1P	50.0	22.7	
730316	DRIVE,.75HP,220/266RPM,7/8SH,115/230V,50/60H,1P	42.1	19.1	
730317	DRIVE,1.0HP,266RPM,7/8SH,115/208-230V,60H,1P	58.5	26.5	
730318	DRIVE,1.5HP,266RPM,7/8SH,115/230V,60H,1P	80.0	36.3	
735330	DRIVE,.50HP,296/359RPM,7/8SH,190/380&208-230/460V,50&60H,3P	33.0	15.0	
735331	DRIVE,.75HP,296/359RPM,7/8SH,190/380&208-230/460V,50&60H,3P	33.6	15.2	
735332	DRIVE,1.0HP,296/359RPM,7/8SH,190/380&208-230/460V,50&60H,3P	43.0	19.5	
735333	DRIVE,1.5HP,296/359RPM,7/8SH,190/380&208-230/460V,50&60H,3P	50.0	37.2	
735342	DRIVE,1.0HP,365RPM,7/8SH,110/220V,50H,1P	46.0	20.9	
735343	DRIVE,1.5HP,365RPM,7/8SH,110/220V,50H,1P	80.0	36.3	
735360	DRIVE,.50HP,365/441RPM,7/8SH,115/230V,50/60H,1P	34.0	15.4	
735361	DRIVE,.75HP,365/441RPM,7/8SH,115/230V,50/60H,1P	53.0	24.0	
735362	DRIVE,1.0HP,441RPM,7/8SH,115/208-230V,60H,1P	46.0	20.9	
735363	DRIVE,1.5HP,441RPM,7/8SH,115/230V,60H,1P	51.8	23.5	
735380	DRIVE,.50HP,296/359RPM,7/8SH,115/230V,50/60H,1P	34.0	15.4	
735381	DRIVE,.75HP,296/359RPM,7/8SH,115/230V,50/60H,1P	41.9	19.0	
735382	DRIVE,1.0HP,359RPM,7/8SH,115/208-230V,60H,1P	43.0	19.5	
735383	DRIVE,1.5HP,359RPM,7/8SH,115/230V,60H,1P	51.8	23.5	
735510	DRIVE,.50HP,365/441RPM,7/8SH,190/380&208-230/460V,50&60H,3P	52.0	23.6	
735511	DRIVE,.75HP,365/441RPM,7/8SH,190/380&208-230/460V,50&60H,3P	35.0	15.9	
735512	DRIVE,1.0HP,365/441RPM,7/8SH,190/380&208-230/460V,50&60H,3P	45.0	20.4	
735513	DRIVE,1.5HP,365/441RPM,7/8SH,190/380&208-230/460V,50&60H,3P	50.4	22.8	
735515	DRIVE,.50HP,220/266RPM,7/8SH,190/380&208-230/460V,50&60H,3P	52.0	23.6	
735516	DRIVE,.75HP,220/266RPM,7/8SH,190/380&208-230/460V,50&60H,3P	55.0	24.9	
735517	DRIVE,1.0HP,220/266RPM,7/8SH,190/380&208-230/460V,50&60H,3P	60.5	27.4	
735518	DRIVE,1.5HP,220/266RPM,7/8SH,190/380&208-230/460V,50&60H,3P	82.0	37.2	
735520	DRIVE,.50HP,156/189RPM,7/8SH,190/380&208-230/460V,50&60H,3P	52.0	23.6	
735521	DRIVE,.75HP,156/189RPM,7/8SH,190/380&208-230/460V,50&60H,3P	55.0	24.9	
735522	DRIVE,1.0HP,156/189RPM,7/8SH,190/380&208-230/460V,50&60H,3P	60.5	27.4	
735523	DRIVE,1.5HP,156/189RPM,7/8SH,190/380&208-230/460V,50&60H,3P	82.0	37.2	

See page 04-24 for Direct Drive Table

PINION TOOL

CATALOG #	ITEM DESCRIPTION	SHIP WEIGHT LBS.	SHIP WEIGHT KG.	LIST PRICE
740517	Pinion Spacer - Field Tool	0.5	0.2	

V-BELT DRIVE UNIT

713230	V-Belt Drive Unit (for use on STEEL Discharge Head Only) - Motor Pulley, Driven Pulley, and V-Belt - Motor NOT Included Requires Motor (Section 20) Requires Port & Driver Kit for 5/8" Shaft (page 04-23)	24.7	11.2	

Toll-free: 1-800-99VALCO
Phone: (+1) 419-678-8731
Fax: (+1) 419-678-2200

CONTROLS & SWITCHES

Hopper Switch Levels

CATALOG #	ITEM DESCRIPTION	SHIP WEIGHT LBS.	SHIP WEIGHT KG.	LIST PRICE
460057	Hopper Level Control Switch - Proximity	5.0	2.3	
720097	Adjustable-Mechanical hopper level control 220V, 20amp, 1-3phase, 50-60hz	4.8	2.2	
451364	Hanger for Poly Hopper Switch	1.6	0.7	

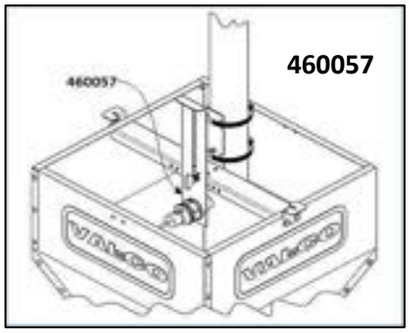

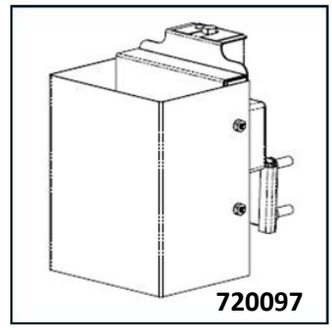

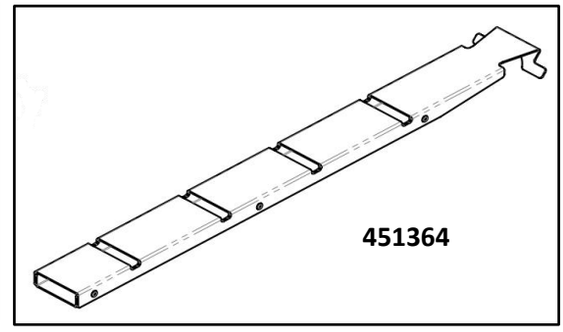

Discharge Head / Drop Tube Switch

730549	Proximity Sensor with Time Delay and Mount Kit - Short Delay - 90-265v, 3 sec. - 10 min. Delay	0.4	0.2	
730465	Proximity Sensor with Time Delay and Mount Kit - Long Delay - 90-265v, 3 sec. - 60 min. Delay	0.9	0.4	
735620	Downspout Feed Control Mechanical Switch FITS 3.5" I.D. DOWNSPOUT TUBE	7.7	3.5	

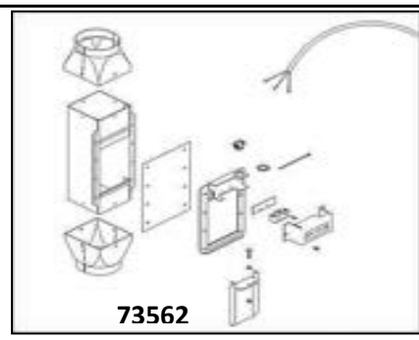

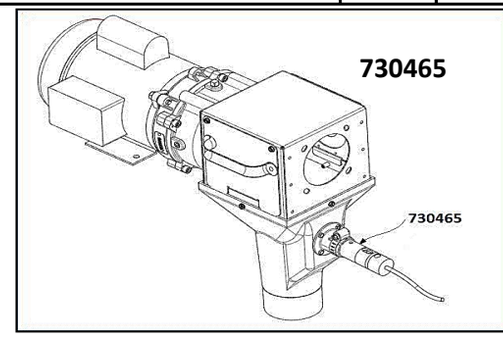

Boot Safety Switch

730965	Boot Safety Switch - Mechanical 110-220v, 20 amp, 1 phase, 50-60hz	1.1	0.5	
455800	Boot Safety Switch Proximity switch, 0-60 sec. delay, adj. sensitivity, 1P/220v/50-60	4.0	1.8 0	

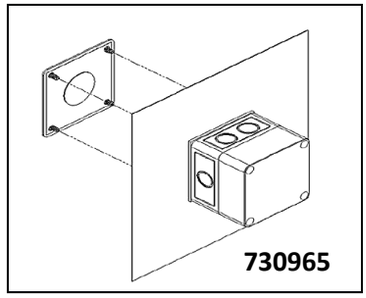

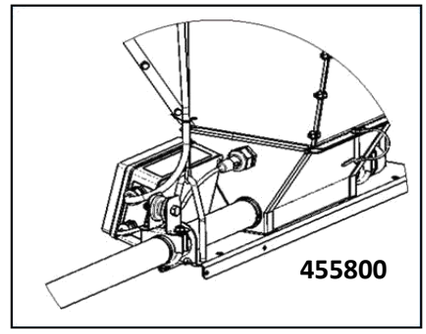

Time Clock / Timer

700025	24 Hour Time Clock - 230V	3.0	1.4	
700024	24 Hour Time Clock - 115V	3.0	1.4	

FLEXIBLE AUGER FEED DELIVERY SYSTEMS
45 DEGREE ENTRANCE SYSTEMS

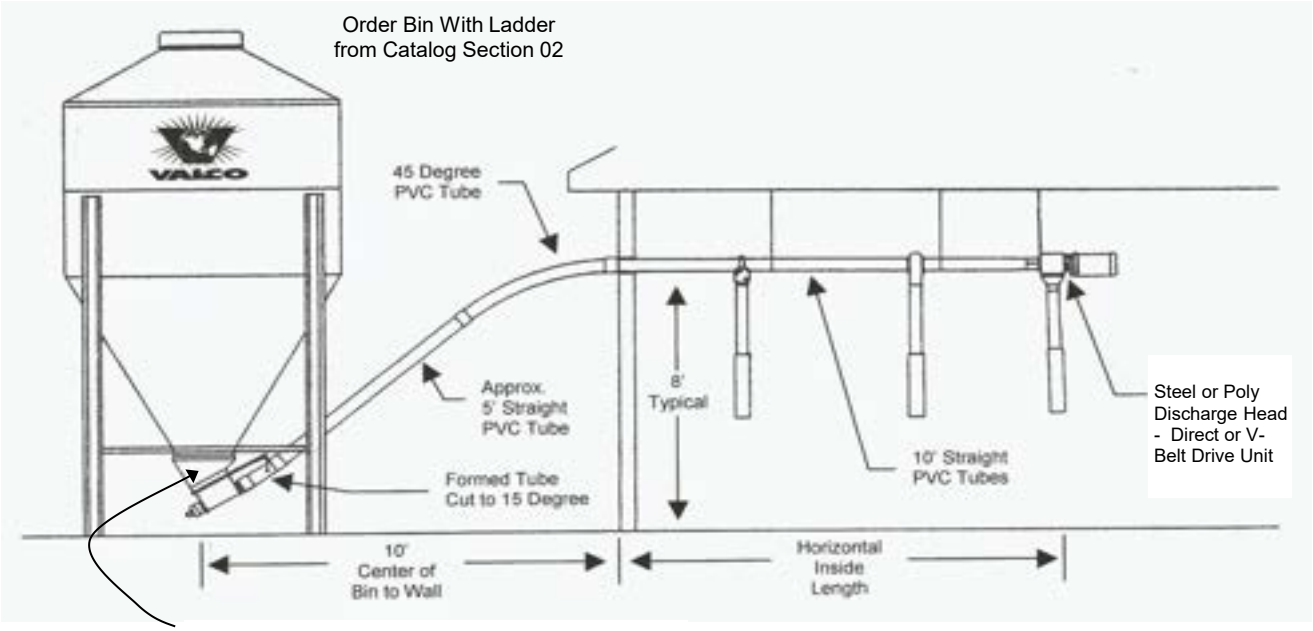

500475 or 500575
30 Degree Plastic Upper Boot Transition

For 45° Entrance System Pricing & Component Requirements:

MODEL 720 SYSTEMS - See pages 04-31

MODEL 725 SYSTEMS - See pages 04-35

MODEL 730 SYSTEMS - See page 04-39

MODEL 735 HV SYSTEMS - See page 04-43

MODEL 735 HM SYSTEMS - See page 04-47

FLEXIBLE AUGER FEED DELIVERY SYSTEMS
30 DEGREE ENTRANCE SYSTEMS

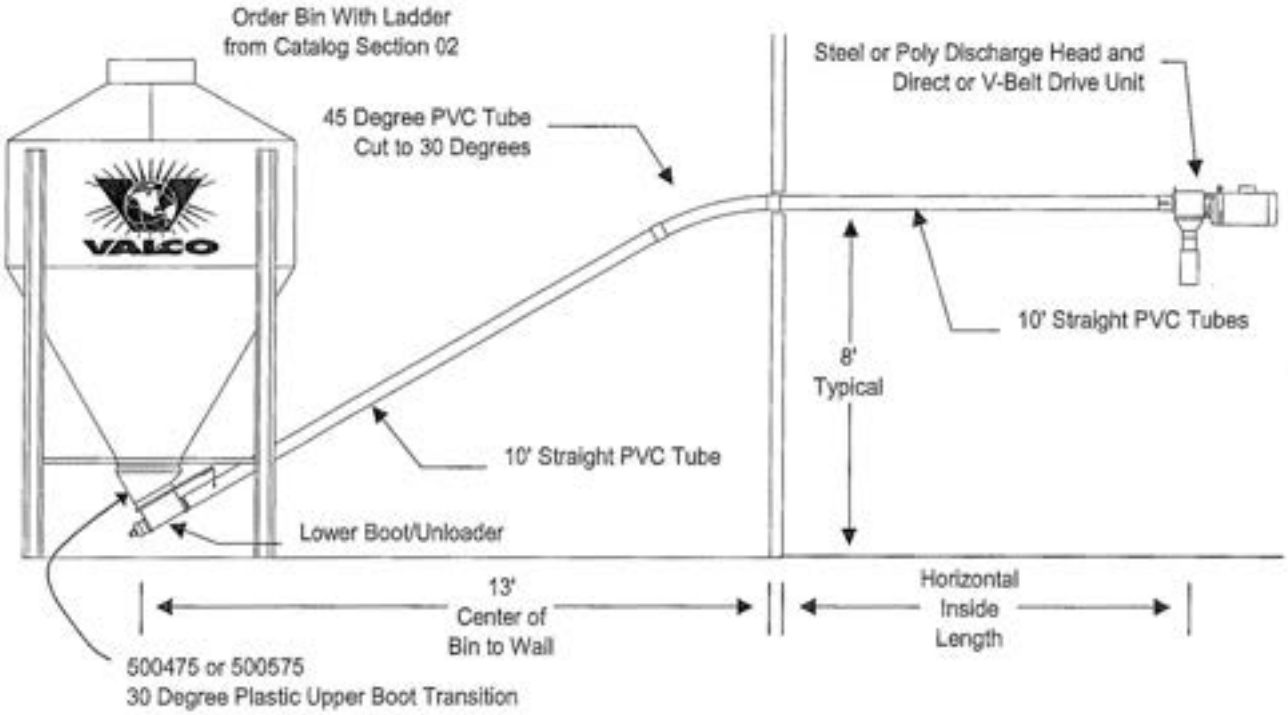

For 30° Entrance System Pricing & Component Requirements:

MODEL 720 SYSTEMS - See pages 04-32

MODEL 725 SYSTEMS - See pages 04-36

MODEL 730 SYSTEMS - See page 04-40

MODEL 735 HV SYSTEMS - See page 04-44

MODEL 735 HM SYSTEMS - See page 04-48

FLEXIBLE AUGER FEED DELIVERY SYSTEMS
PASS-THRU SYSTEMS

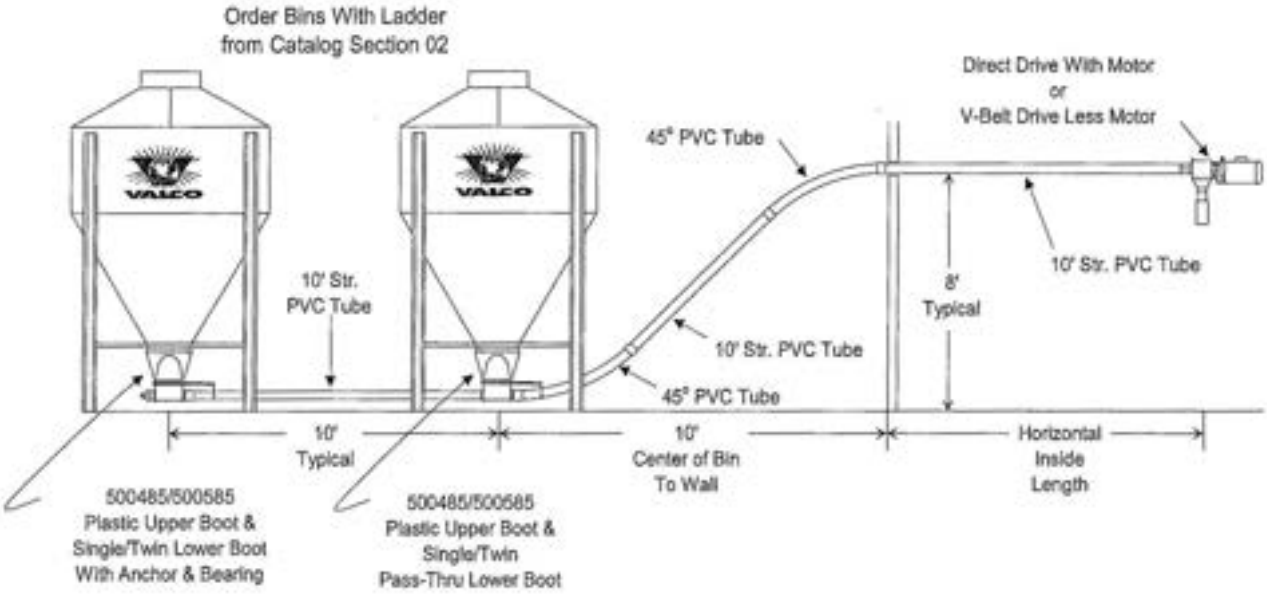

For Pass-Thru System Pricing & Component Requirements:

MODEL 720 SYSTEMS - See pages 04-33

MODEL 725 SYSTEMS - See pages 04-37

MODEL 730 SYSTEMS - See page 04-41

MODEL 735 HV SYSTEMS - See page 04-45

MODEL 735 HM SYSTEMS - See page 04-49

FLEXIBLE AUGER FEED DELIVERY SYSTEMS
EXTENDED LENGTH SYSTEMS

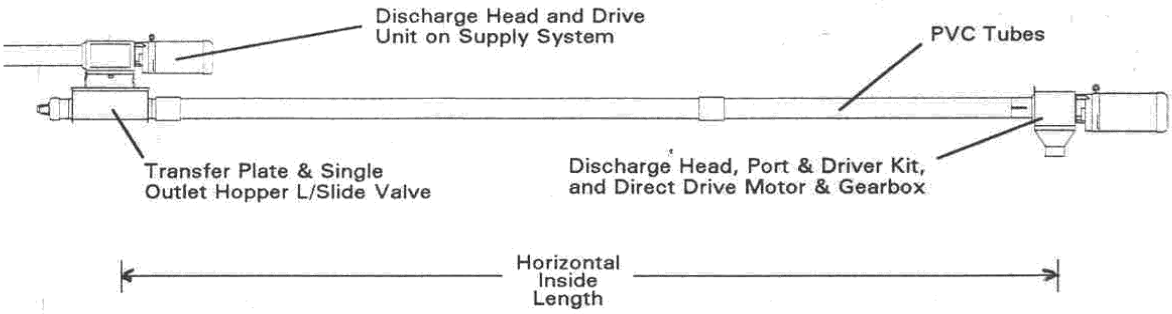

For Extended Length System Pricing & Component Requirements:

MODEL 720 SYSTEMS - See pages 04-34

MODEL 725 SYSTEMS - See pages 04-38

MODEL 730 SYSTEMS - See page 04-42

MODEL 735 HV SYSTEMS - See page 04-46

MODEL 735 HM SYSTEMS - See page 04-50

RECOMMENDATION: Select a drive unit with a faster output rpm for the extended system than for the supply (entrance or pass-thru) system.

Toll-free: 1-800-99VALCO
Phone: (+1) 419-678-8731
Fax: (+1) 419-678-2200

MODEL 720 - 2.25" COMPONENTS - 45° ENTRANCE SYSTEM

REFER TO 45° ENTRANCE DRAWING ON PAGE 04-27

	CATALOG NUMBER	COMPONENT DESCRIPTION	HORIZONTAL INSIDE LENGTH OF SYSTEM												
			FT	10	20	30	40	50	60	70	80	90	100	110	120	130
			M	3.1	6.1	9.2	12.2	15.3	18.3	21.4	24.4	27.5	30.5	33.6	36.6	39.7
ORDER THE INDICATED QTY	**LINE COMPONENTS:**															
	720498	45° Formed PVC Tube		2	2	2	2	2	2	2	2	2	2	2	2	2
	720434	10' Straight PVC Tube		2	3	4	5	6	7	8	9	10	11	12	13	14
	730415	PVC Cement - 1/2 Pint		1	1	1	1	1	1	1	1	2	2	2	2	2
	720440	1.52" OD Auger (feet)		30	40	50	60	70	80	90	100	110	120	130	140	150
	SELECT[1]	Discharge Head		1	1	1	1	1	1	1	1	1	1	1	1	1
DIRECT OR BELT DRIVE UNIT	**DIRECT DRIVE UNIT:**															
	SELECT[2]	.50 HP Direct Drive		1	1	1	1	1	1	1	1	1	1	1	1	1
	SELECT[3]	.75 HP Direct Drive		1	1	1	1	1	1	1	1	1	1	1	1	1
	V-BELT DRIVE UNIT:															
	713230	V-Belt Drive Unit		1	1	1	1	1	1	1	1	1	1	1	1	1
	SELECT[3]	Port & Driver Kit		1	1	1	1	1	1	1	1	1	1	1	1	1
	SELECT[4]	.50 HP Direct Drive		1	1	1	1	1	1	1	1	1	1	1	1	1
ORDER IF NEEDED	**OPTIONAL SUSPENSION (CHOOSE HANGERS OR CHAIN):**															
	VEN91504C	5/16" x 3.5" Screw Hook		3	5	8	10	13	15	18	20	23	25	28	30	33
	720220	Formed Hanger		3	5	8	10	13	15	18	20	23	25	28	30	33
	820099	#2 Hanger Chain (feet)		8	13	20	25	33	38	45	50	58	63	70	75	83

	CATALOG NUMBER	COMPONENT DESCRIPTION	HORIZONTAL INSIDE LENGTH OF SYSTEM											
			FT	140	150	160	170	180	190	200	210	220	230	240	250
			M	42.7	45.8	48.8	51.9	54.9	58	61	64.1	67.1	70.2	73.2	76.3
ORDER THE INDICATED QTY	**LINE COMPONENTS:**														
	720498	45° Formed PVC Tube		2	2	2	2	2	2	2	2	2	2	2	2
	720434	10' Straight PVC Tube		15	16	17	18	19	20	21	22	23	24	25	26
	730415	PVC Cement - 1/2 Pint		2	2	2	2	2	3	3	3	3	3	3	3
	720440	1.52" OD Auger (feet)		160	170	180	190	200	210	220	230	240	250	260	270
	SELECT[1]	Discharge Head		1	1	1	1	1	1	1	1	1	1	1	1
DIRECT OR BELT DRIVE UNIT	**DIRECT DRIVE UNIT:**														
	SELECT[2]	.50 HP Direct Drive		1	1	1	1	1	1	1	1	1	1	1	1
	SELECT[3]	Port & Driver Kit		1	1	1	1	1	1	1	1	1	1	1	1
	V-BELT DRIVE UNIT:														
	713230	V-Belt Drive Unit		1	1	1	1	1	1	1	1	1	1	1	1
	SELECT[3]	Port & Driver Kit		1	1	1	1	1	1	1	1	1	1	1	1
	SELECT[4]	.50 HP Direct Drive		1	1	1	1	1	1	1	1	1	1	1	1
ORDER IF NEEDED	**OPTIONAL SUSPENSION (CHOOSE HANGERS OR CHAIN):**														
	VEN91504C	5/16" x 3.5" Screw Hook		35	38	40	43	45	48	50	53	55	58	60	63
	720220	Formed Hanger		35	38	40	43	45	48	50	53	55	58	60	63
	820099	#2 Hanger Chain (feet)		88	95	100	108	113	120	125	133	138	145	150	158

1 Select steel or poly discharge head from pages 04-18 and 04-20.

2 Select motor & gearbox unit from pages 04-24 and 04-25.

3 Select correct port & driver kit from page 04-23.

4 Select farm duty motor from section 20.

Toll-free: 1-800-99VALCO
Phone: (+1) 419-678-8731
Fax: (+1) 419-678-2200

MODEL 720 - 2.25" COMPONENTS - 30° ENTRANCE SYSTEM

REFER TO 30° ENTRANCE DRAWING ON PAGE 04-28

CATALOG NUMBER		COMPONENT DESCRIPTION	HORIZONTAL INSIDE LENGTH OF SYSTEM												
			FT	10	20	30	40	50	60	70	80	90	100	110	120	130
			M	3.1	6.1	9.2	12.2	15.3	18.3	21.4	24.4	27.5	30.5	33.6	36.6	39.7
ORDER THE INDICATED QTY	**LINE COMPONENTS:**															
	720498	45° Formed PVC Tube		1	1	1	1	1	1	1	1	1	1	1	1	1
	720434	10' Straight PVC Tube		2	3	4	5	6	7	8	9	10	11	12	13	14
	730415	PVC Cement - 1/2 Pint		1	1	1	1	1	1	1	1	2	2	2	2	2
	720440	1.52" OD Auger (feet)		30	40	50	60	70	80	90	100	110	120	130	140	150
	SELECT[1]	Discharge Head		1	1	1	1	1	1	1	1	1	1	1	1	1
DIRECT OR BELT DRIVE UNIT	**DIRECT DRIVE UNIT:**															
	SELECT[2]	.50 HP Direct Drive		1	1	1	1	1	1	1	1	1	1	1	1	1
	SELECT[3]	.75 HP Direct Drive		1	1	1	1	1	1	1	1	1	1	1	1	1
	V-BELT DRIVE UNIT:															
	713230	V-Belt Drive Unit		1	1	1	1	1	1	1	1	1	1	1	1	1
	SELECT[3]	Port & Driver Kit		1	1	1	1	1	1	1	1	1	1	1	1	1
	SELECT[4]	.50 HP Direct Drive		1	1	1	1	1	1	1	1	1	1	1	1	1
ORDER IF NEEDED	**OPTIONAL SUSPENSION (CHOOSE HANGERS OR CHAIN):**															
	VEN91504C	5/16" x 3.5" Screw Hook		3	5	8	10	13	15	18	20	23	25	28	30	33
	720220	Formed Hanger		3	5	8	10	13	15	18	20	23	25	28	30	33
	820099	#2 Hanger Chain (feet)		8	13	20	25	33	38	45	50	58	63	70	75	83

CATALOG NUMBER		COMPONENT DESCRIPTION	HORIZONTAL INSIDE LENGTH OF SYSTEM												
			FT	140	150	160	170	180	190	200	210	220	230	240	250
			M	42.7	45.8	48.8	51.9	54.9	58	61	64.1	67.1	70.2	73.2	76.3
ORDER THE INDICATED QTY	**LINE COMPONENTS:**														
	720498	45° Formed PVC Tube		2	2	2	2	2	2	2	2	2	2	2	2
	720434	10' Straight PVC Tube		15	16	17	18	19	20	21	22	23	24	25	26
	730415	PVC Cement - 1/2 Pint		2	2	2	2	2	3	3	3	3	3	3	3
	720440	1.52" OD Auger (feet)		160	170	180	190	200	210	220	230	240	250	260	270
	SELECT[1]	Discharge Head		1	1	1	1	1	1	1	1	1	1	1	1
DIRECT OR BELT DRIVE UNIT	**DIRECT DRIVE UNIT:**														
	SELECT[2]	.50 HP Direct Drive		1	1	1	1	1	1	1	1	1	1	1	1
	SELECT[3]	Port & Driver Kit		1	1	1	1	1	1	1	1	1	1	1	1
	V-BELT DRIVE UNIT:														
	713230	V-Belt Drive Unit		1	1	1	1	1	1	1	1	1	1	1	1
	SELECT[3]	Port & Driver Kit		1	1	1	1	1	1	1	1	1	1	1	1
	SELECT[4]	.50 HP Direct Drive		1	1	1	1	1	1	1	1	1	1	1	1
ORDER IF NEEDED	**OPTIONAL SUSPENSION (CHOOSE HANGERS OR CHAIN):**														
	VEN91504C	5/16" x 3.5" Screw Hook		35	38	40	43	45	48	50	53	55	58	60	63
	720220	Formed Hanger		35	38	40	43	45	48	50	53	55	58	60	63
	820099	#2 Hanger Chain (feet)		88	95	100	108	113	120	125	133	138	145	150	158

1 Select steel or poly discharge head from pages 04-18 and 04-20.

2 Select motor & gearbox unit from pages 04-24 and 04-25.

3 Select correct port & driver kit from page 04-23.

4 Select farm duty motor from section 20.

Toll-free: 1-800-99VALCO
Phone: (+1) 419-678-8731
Fax: (+1) 419-678-2200

MODEL 720 - 2.25" COMPONENTS - PASS-THRU SYSTEM

REFER TO PASS-THRU DRAWING ON PAGE 04-29

	CATALOG NUMBER	COMPONENT DESCRIPTION	HORIZONTAL INSIDE LENGTH OF SYSTEM													
			FT	10	20	30	40	50	60	70	80	90	100	110	120	130
			M	3.1	6.1	9.2	12.2	15.3	18.3	21.4	24.4	27.5	30.5	33.6	36.6	39.7
ORDER THE INDICATED QTY	**LINE COMPONENTS:**															
	720498	45° Formed PVC Tube		0	0	0	0	0	0	0	0	0	0	0	0	0
	720434	10' Straight PVC Tube		3	4	5	6	7	8	9	10	11	12	13	14	15
	730415	PVC Cement - 1/2 Pint		1	1	1	1	1	1	1	1	2	2	2	2	2
	720440	1.52" OD Auger (feet)		50	60	70	80	90	100	110	120	130	140	150	160	170
	SELECT[1]	Discharge Head		1	1	1	1	1	1	1	1	1	1	1	1	1
DIRECT OR BELT DRIVE UNIT	**DIRECT DRIVE UNIT:**															
	SELECT[2]	.50 HP Direct Drive		1	1	1	1	1	1	1	1	1	1	1	1	1
	SELECT[3]	.75 HP Direct Drive		1	1	1	1	1	1	1	1	1	1	1	1	1
	V-BELT DRIVE UNIT:															
	713230	V-Belt Drive Unit		1	1	1	1	1	1	1	1	1	1	1	1	1
	SELECT[3]	Port & Driver Kit		1	1	1	1	1	1	1	1	1	1	1	1	1
	SELECT[4]	.50 HP Direct Drive		1	1	1	1	1	1	1	1	1	1	1	1	1
ORDER IF NEEDED	**OPTIONAL SUSPENSION (CHOOSE HANGERS OR CHAIN):**															
	VEN91504C	5/16" x 3.5" Screw Hook		3	5	8	10	13	15	18	20	23	25	28	30	33
	720220	Formed Hanger		3	5	8	10	13	15	18	20	23	25	28	30	33
	820099	#2 Hanger Chain (feet)		8	13	20	25	33	38	45	50	58	63	70	75	83

	CATALOG NUMBER	COMPONENT DESCRIPTION	HORIZONTAL INSIDE LENGTH OF SYSTEM							
			FT	140	150	160	170	180	190	200
			M	42.7	45.8	48.8	51.9	54.9	58	61
ORDER THE INDICATED QTY	**LINE COMPONENTS:**									
	720498	45° Formed PVC Tube		0	0	0	0	0	0	0
	720434	10' Straight PVC Tube		16	17	18	19	20	21	22
	730415	PVC Cement - 1/2 Pint		2	2	2	2	2	3	3
	720440	1.52" OD Auger (feet)		180	190	200	210	220	230	240
	SELECT[1]	Discharge Head		1	1	1	1	1	1	1
DIRECT OR BELT DRIVE UNIT	**DIRECT DRIVE UNIT:**									
	SELECT[2]	.50 HP Direct Drive		1	1	1	1	1	1	1
	SELECT[3]	Port & Driver Kit		1	1	1	1	1	1	1
	V-BELT DRIVE UNIT:									
	713230	V-Belt Drive Unit		1	1	1	1	1	1	1
	SELECT[3]	Port & Driver Kit		1	1	1	1	1	1	1
	SELECT[4]	.50 HP Direct Drive		1	1	1	1	1	1	1
ORDER IF NEEDED	**OPTIONAL SUSPENSION (CHOOSE HANGERS OR CHAIN):**									
	VEN91504C	5/16" x 3.5" Screw Hook		35	38	40	43	45	48	50
	720220	Formed Hanger		35	38	40	43	45	48	50
	820099	#2 Hanger Chain (feet)		88	95	100	108	113	120	125

1 Select steel or poly discharge head from pages 04-18 and 04-20.

2 Select motor & gearbox unit from pages 04-24 and 04-25.

3 Select correct port & driver kit from page 04-23.

4 Select farm duty motor from section 20.

Toll-free: 1-800-99VALCO
Phone: (+1) 419-678-8731
Fax: (+1) 419-678-2200

MODEL 720 - 2.25" COMPONENTS - EXTENDED LENGTH SYSTEM

REFER TO EXTENDED LENGTH DRAWING ON PAGE 04-30

CATALOG NUMBER		COMPONENT DESCRIPTION	HORIZONTAL INSIDE LENGTH OF SYSTEM														
			FT	10	20	30	40	50	60	70	80	90	100	110	120	130	140	150
			M	3.1	6.1	9.2	12	15	18.3	21	24	28	31	34	37	40	43	46
ORDER THE INDICATED QTY	**LINE COMPONENTS:**																	
	720964	Lower Boot Less Slide Valve		1	1	1	1	1	1	1	1	1	1	1	1	1	1	1
	SELECT[4]	Adapter Plate		1	1	1	1	1	1	1	1	1	1	1	1	1	1	1
	720434	10' Straight PVC Tube		1	2	3	4	5	6	7	8	9	10	11	12	13	14	15
	730415	PVC Cement - 1/2 Pint		1	1	1	1	1	1	1	1	1	2	2	2	2	2	2
	720440	1.52" OD Auger (feet)		20	30	40	50	60	70	80	90	100	110	120	130	140	150	160
	SELECT[1]	Discharge Head		1	1	1	1	1	1	1	1	1	1	1	1	1	1	1
DRIVE UNIT	**DIRECT DRIVE UNIT:**																	
	SELECT[2]	.75 HP Direct Drive		1	1	1	1	1	1	1	1	1	1	1	1	1	1	1
	SELECT[3]	Port & Driver Kit		1	1	1	1	1	1	1	1	1	1	1	1	1	1	1
ORDER IF NEEDED	**OPTIONAL SUSPENSION (CHOOSE HANGERS OR CHAIN):**																	
	VEN91504C	5/16" x 3.5" Screw Hook		3	5	8	10	13	15	18	20	23	25	28	30	33	35	38
	720220	Formed Hanger		3	5	8	10	13	15	18	20	23	25	28	30	33	35	38
	820099	#2 Hanger Chain (feet)		8	13	20	25	33	38	45	50	58	63	70	75	83	88	95

CATALOG NUMBER		COMPONENT DESCRIPTION	HORIZONTAL INSIDE LENGTH OF SYSTEM													
			FT	160	170	180	190	200	210	220	230	240	250	260	270	280	290
			M	49	52	55	58	61	64.1	67	70	73	76	79	82	85	88
ORDER THE INDICATED QTY	**LINE COMPONENTS:**																
	720964	Lower Boot Less Slide Valve		1	1	1	1	1	1	1	1	1	1	1	1	1	1
	SELECT[4]	Adapter Plate		1	1	1	1	1	1	1	1	1	1	1	1	1	1
	720434	10' Straight PVC Tube		16	17	18	19	20	21	22	23	24	25	26	27	28	29
	730415	PVC Cement - 1/2 Pint		2	2	2	2	3	3	3	3	3	3	3	3	3	3
	720440	1.52" OD Auger (feet)		170	180	190	200	210	220	230	240	250	260	270	280	290	300
	SELECT[1]	Discharge Head		1	1	1	1	1	1	1	1	1	1	1	1	1	1
DRIVE UNIT	**DIRECT DRIVE UNIT:**																
	SELECT[2]	.50 HP Direct Drive		1	1	1	1	1	1	1	1	1	1	1	1	1	1
	SELECT[3]	Port & Driver Kit		1	1	1	1	1	1	1	1	1	1	1	1	1	1
ORDER IF NEEDED	**OPTIONAL SUSPENSION (CHOOSE HANGERS OR CHAIN):**																
	VEN91504C	5/16" x 3.5" Screw Hook		40	43	45	48	50	53	55	58	60	63	65	68	70	73
	720220	Formed Hanger		40	43	45	48	50	53	55	58	60	63	65	68	70	73
	820099	#2 Hanger Chain (feet)		100	108	113	120	125	133	138	145	150	158	163	170	175	183

1 Select steel or poly discharge head from pages 04-18 and 04-20.

2 Select motor & gearbox unit from pages 04-24 and 04-25 (See recommendation on selecting drive RPMs on page 04-30).

3 Select correct port & driver kit from page 04-23.

4 Select adapter plate (for steel or poly discharge head) from page 04-07.

Toll-free: 1-800-99VALCO
Phone: (+1) 419-678-8731
Fax: (+1) 419-678-2200

MODEL 725 - 3" COMPONENTS - 45° ENTRANCE SYSTEM

REFER TO 45° ENTRANCE DRAWING PAGE 04-27

	CATALOG NUMBER	COMPONENT DESCRIPTION	HORIZONTAL INSIDE LENGTH OF SYSTEM									
			FT	10	20	30	40	50	60	70	80	90	100
			M	3.1	6.1	9.2	12.2	15.3	18.3	21.4	24.4	27.5	30.5
ORDER THE INDICATED QTY	**LINE COMPONENTS:**												
	730499	45° Formed PVC Tube		2	2	2	2	2	2	2	2	2	2
	730434	10' Straight PVC Tube		2	3	4	5	6	7	8	9	10	11
	730415	PVC Cement - 1/2 Pint		1	1	1	1	1	1	1	1	2	2
	725440	2.25" OD Auger (feet)		30	40	50	60	70	80	90	100	110	120
	SELECT[1]	Discharge Head		1	1	1	1	1	1	1	1	1	1
DIRECT OR BELT DRIVE UNIT	**DIRECT DRIVE UNIT:**												
	SELECT[2]	.50 HP Direct Drive		1	1	1	1	1	1	1	1	0	0
	SELECT[2]	.75 HP Direct Drive		0	0	0	0	0	0	0	0	1	1
	SELECT[2]	1.0 HP Direct Drive		0	0	0	0	0	0	0	0	0	0
	SELECT[3]	Port & Driver Kit		1	1	1	1	1	1	1	1	1	1
	V-BELT DRIVE UNIT:												
	713230	V-Belt Drive Unit		1	1	1	1	1	1	1	1	1	1
	SELECT[3]	Port & Driver Kit		1	1	1	1	1	1	1	1	1	1
	SELECT[4]	Farm Duty Motor (see HP above)		1	1	1	1	1	1	1	1	1	1
ORDER IF NEEDED	**OPTIONAL SUSPENSION (CHOOSE HANGERS OR CHAIN):**												
	VEN91504C	5/16" x 3.5" Screw Hook		3	5	8	10	13	15	18	20	23	25
	713220 or 713223	Formed Hanger Galv (713220) or SS (713223)		3	5	8	10	13	15	18	20	23	25
	820099	#2 Hanger Chain (feet)		8	13	20	25	33	38	45	50	58	63

	CATALOG NUMBER	COMPONENT DESCRIPTION	HORIZONTAL INSIDE LENGTH OF SYSTEM									
			FT	110	120	130	140	150	160	170	180	190	200
			M	33.6	36.6	39.7	42.7	45.8	48.8	51.9	54.9	58	61
ORDER THE INDICATED QTY	**LINE COMPONENTS:**												
	730499	45° Formed PVC Tube		2	2	2	2	2	2	2	2	2	2
	730434	10' Straight PVC Tube		12	13	14	15	16	17	18	19	20	21
	730415	PVC Cement - 1/2 Pint		2	2	2	2	2	2	2	2	3	3
	725440	2.25" OD Auger (feet)		130	140	150	160	170	180	190	200	210	220
	SELECT[1]	Discharge Head		1	1	1	1	1	1	1	1	1	1
DIRECT OR BELT DRIVE UNIT	**DIRECT DRIVE UNIT:**												
	SELECT[2]	.50 HP Direct Drive		0	0	0	0	0	0	0	0	0	0
	SELECT[2]	.75 HP Direct Drive		1	1	1	1	1	0	0	0	0	0
	SELECT[2]	1.0 HP Direct Drive		0	0	0	0	0	1	1	1	1	1
	SELECT[3]	Port & Driver Kit		1	1	1	1	1	1	1	1	1	1
	V-BELT DRIVE UNIT:												
	713230	V-Belt Drive Unit		1	1	1	1	1	1	1	1	1	1
	SELECT[3]	Port & Driver Kit		1	1	1	1	1	1	1	1	1	1
	SELECT[4]	Farm Duty Motor (see HP above)		1	1	1	1	1	1	1	1	1	1
ORDER IF NEEDED	**OPTIONAL SUSPENSION (CHOOSE HANGERS OR CHAIN):**												
	VEN91504C	5/16" x 3.5" Screw Hook		28	30	33	35	38	40	43	45	48	50
	713220 or 713223	Formed Hanger Galv (713220) or SS (713223)		28	30	33	35	38	40	43	45	48	50
	820099	#2 Hanger Chain (feet)		70	75	83	88	95	100	108	113	120	125

1 Select steel or poly discharge head from pages 04-18 and 04-20.

2 Select motor & gearbox unit from pages 04-24 and 04-25.

3 Select correct port & driver kit from page 04-23.

4 Select farm duty motor from section 20.

Toll-free: 1-800-99VALCO
Phone: (+1) 419-678-8731
Fax: (+1) 419-678-2200

MODEL 725 - 3" COMPONENTS - 30° ENTRANCE SYSTEM

REFER TO 30° ENTRANCE DRAWING PAGE 04-28

	CATALOG NUMBER	COMPONENT DESCRIPTION	HORIZONTAL INSIDE LENGTH OF SYSTEM									
			FT	10	20	30	40	50	60	70	80	90	100
			M	3.1	6.1	9.2	12.2	15.3	18.3	21.4	24.4	27.5	30.5
ORDER THE INDICATED QTY	**LINE COMPONENTS:**												
	730499	45° Formed PVC Tube		1	1	1	1	1	1	1	1	1	1
	730434	10' Straight PVC Tube		2	3	4	5	6	7	8	9	10	11
	730415	PVC Cement - 1/2 Pint		1	1	1	1	1	1	1	1	2	2
	725440	2.25" OD Auger (feet)		30	40	50	60	70	80	90	100	110	120
	SELECT[1]	Discharge Head		1	1	1	1	1	1	1	1	1	1
DIRECT OR BELT DRIVE UNIT	**DIRECT DRIVE UNIT:**												
	SELECT[2]	.50 HP Direct Drive		1	1	1	1	1	1	1	1	0	0
	SELECT[2]	.75 HP Direct Drive		0	0	0	0	0	0	0	0	1	1
	SELECT[2]	1.0 HP Direct Drive		0	0	0	0	0	0	0	0	0	0
	SELECT[3]	Port & Driver Kit		1	1	1	1	1	1	1	1	1	1
	V-BELT DRIVE UNIT:												
	713230	V-Belt Drive Unit		1	1	1	1	1	1	1	1	1	1
	SELECT[3]	Port & Driver Kit		1	1	1	1	1	1	1	1	1	1
	SELECT[4]	Farm Duty Motor (see HP above)		1	1	1	1	1	1	1	1	1	1
ORDER IF NEEDED	**OPTIONAL SUSPENSION (CHOOSE HANGERS OR CHAIN):**												
	VEN91504C	5/16" x 3.5" Screw Hook		3	5	8	10	13	15	18	20	23	25
	713220 or 713223	Formed Hanger Galv (713220) or SS (713223)		3	5	8	10	13	15	18	20	23	25
	820099	#2 Hanger Chain (feet)		8	13	20	25	33	38	45	50	58	63

	CATALOG NUMBER	COMPONENT DESCRIPTION	HORIZONTAL INSIDE LENGTH OF SYSTEM									
			FT	110	120	130	140	150	160	170	180	190	200
			M	33.6	36.6	39.7	42.7	45.8	48.8	51.9	54.9	58	61
ORDER THE INDICATED QTY	**LINE COMPONENTS:**												
	730499	45° Formed PVC Tube		1	1	1	1	1	1	1	1	1	1
	730434	10' Straight PVC Tube		12	13	14	15	16	17	18	19	20	21
	730415	PVC Cement - 1/2 Pint		2	2	2	2	2	2	2	2	3	3
	725440	2.25" OD Auger (feet)		130	140	150	160	170	180	190	200	210	220
	SELECT[1]	Discharge Head		1	1	1	1	1	1	1	1	1	1
DIRECT OR BELT DRIVE UNIT	**DIRECT DRIVE UNIT:**												
	SELECT[2]	.50 HP Direct Drive		0	0	0	0	0	0	0	0	0	0
	SELECT[2]	.75 HP Direct Drive		1	1	1	1	1	0	0	0	0	0
	SELECT[2]	1.0 HP Direct Drive		0	0	0	0	0	1	1	1	1	1
	SELECT[3]	Port & Driver Kit		1	1	1	1	1	1	1	1	1	1
	V-BELT DRIVE UNIT:												
	713230	V-Belt Drive Unit		1	1	1	1	1	1	1	1	1	1
	SELECT[3]	Port & Driver Kit		1	1	1	1	1	1	1	1	1	1
	SELECT[4]	Farm Duty Motor (see HP above)		1	1	1	1	1	1	1	1	1	1
ORDER IF NEEDED	**OPTIONAL SUSPENSION (CHOOSE HANGERS OR CHAIN):**												
	VEN91504C	5/16" x 3.5" Screw Hook		28	30	33	35	38	40	43	45	48	50
	713220 or 713223	Formed Hanger Galv (713220) or SS (713223)		28	30	33	35	38	40	43	45	48	50
	820099	#2 Hanger Chain (feet)		70	75	83	88	95	100	108	113	120	125

1 Select steel or poly discharge head from pages 04-18and 04-20.

2 Select motor & gearbox unit from pages 04-24 and 04-25.

3 Select correct port & driver kit from page 04-23

4 Select farm duty motor from section 20

Toll-free: 1-800-99VALCO
Phone: (+1) 419-678-8731
Fax: (+1) 419-678-2200

MODEL 725 - 3" COMPONENTS - PASS-THRU SYSTEM

REFER TO PASS-THRU SYSTEM DRAWING PAGE 04-29

	CATALOG NUMBER	COMPONENT DESCRIPTION	HORIZONTAL INSIDE LENGTH OF SYSTEM										
			FT	10	20	30	40	50	60	70	80	90	100
			M	3.1	6.1	9.2	12.2	15.3	18.3	21.4	24.4	27.5	30.5
ORDER THE INDICATED QTY	**LINE COMPONENTS:**												
	730499	45° Formed PVC Tube		2	2	2	2	2	2	2	2	2	2
	730434	10' Straight PVC Tube		3	4	5	6	7	8	9	10	11	12
	730415	PVC Cement - 1/2 Pint		1	1	1	1	1	1	1	2	2	2
	725440	2.25" OD Auger (feet)		50	60	70	80	90	100	110	120	130	140
	SELECT[1]	Discharge Head		1	1	1	1	1	1	1	1	1	1
DIRECT OR BELT DRIVE UNIT	**DIRECT DRIVE UNIT:**												
	SELECT[2]	.50 HP Direct Drive		1	1	1	0	0	0	0	0	0	0
	SELECT[2]	.75 HP Direct Drive		0	0	0	1	1	1	1	1	1	0
	SELECT[2]	1.0 HP Direct Drive		0	0	0	0	0	0	0	0	0	1
	SELECT[3]	Port & Driver Kit		1	1	1	1	1	1	1	1	1	1
	V-BELT DRIVE UNIT:												
	713230	V-Belt Drive Unit		1	1	1	1	1	1	1	1	1	1
	SELECT[3]	Port & Driver Kit		1	1	1	1	1	1	1	1	1	1
	SELECT[4]	Farm Duty Motor (see HP above)		1	1	1	1	1	1	1	1	1	1
ORDER IF NEEDED	**OPTIONAL SUSPENSION (CHOOSE HANGERS OR CHAIN):**												
	VEN91504C	5/16" x 3.5" Screw Hook		3	5	8	10	13	15	18	20	23	25
	713220 or 713223	Formed Hanger Galv (713220) or SS (713223)		3	5	8	10	13	15	18	20	23	25
	820099	#2 Hanger Chain (feet)		8	13	20	25	33	38	45	50	58	63

	CATALOG NUMBER	COMPONENT DESCRIPTION	HORIZONTAL INSIDE LENGTH OF SYSTEM					
			FT	110	120	130	140	150
			M	33.6	36.6	39.7	42.7	45.8
ORDER THE INDICATED QTY	**LINE COMPONENTS:**							
	730499	45° Formed PVC Tube		2	2	2	2	2
	730434	10' Straight PVC Tube		13	14	15	16	17
	730415	PVC Cement - 1/2 Pint		2	2	2	2	2
	725440	2.25" OD Auger (feet)		150	160	170	180	190
	SELECT[1]	Discharge Head		1	1	1	1	1
DIRECT OR BELT DRIVE UNIT	**DIRECT DRIVE UNIT:**							
	SELECT[2]	.50 HP Direct Drive		0	0	0	0	0
	SELECT[2]	.75 HP Direct Drive		0	0	0	0	0
	SELECT[2]	1.0 HP Direct Drive		1	1	1	1	0
	SELECT[3]	Port & Driver Kit		1	1	1	1	1
	V-BELT DRIVE UNIT:							
	713230	V-Belt Drive Unit		1	1	1	1	1
	SELECT[3]	Port & Driver Kit		1	1	1	1	1
	SELECT[4]	Farm Duty Motor (see HP above)		1	1	1	1	1
ORDER IF NEEDED	**OPTIONAL SUSPENSION (CHOOSE HANGERS OR CHAIN):**							
	VEN91504C	5/16" x 3.5" Screw Hook		28	30	33	35	38
	713220 or 713223	Formed Hanger Galv (713220) or SS (713223)		28	30	33	35	38
	820099	#2 Hanger Chain (feet)		70	75	83	88	95

1 Select steel or poly discharge head from pages 04-18 and 04-20.

2 Select motor & gearbox unit from pages 04-24 and 04-25.

3 Select correct port & driver kit from page 04-23.

4 Select farm duty motor from section 20.

Toll-free: 1-800-99VALCO
Phone: (+1) 419-678-8731
Fax: (+1) 419-678-2200

MODEL 725 - 3" COMPONENTS - EXTENDED LENGTH SYSTEM

REFER TO PASS-THRU SYSTEM DRAWING PAGE 04-29

	CATALOG NUMBER	COMPONENT DESCRIPTION	HORIZONTAL INSIDE LENGTH OF SYSTEM												
			FT	10	20	30	40	50	60	70	80	90	100	110	120	130
			M	3.1	6.1	9.2	12.2	15.3	18.3	21.4	24.4	27.5	30.5	33.6	36.6	39.7
ORDER THE INDICATED QTY	**LINE COMPONENTS:**															
	730912	Lower Boot Less Slide Valve		1	1	1	1	1	1	1	1	1	1	1	1	1
	SELECT[4]	Adapter Plate		1	1	1	1	1	1	1	1	1	1	1	1	1
	730434	10' Straight PVC Tube		1	2	3	4	5	6	7	8	9	10	11	12	13
	730415	PVC Cement - 1/2 Pint		1	1	1	1	1	1	1	1	1	2	2	2	2
	725440	2.25" OD Auger (feet)		20	30	40	50	60	70	80	90	100	110	120	130	140
	SELECT[1]	Discharge Head		1	1	1	1	1	1	1	1	1	1	1	1	1
DRIVE UNIT	**DIRECT DRIVE UNIT:**															
	SELECT[2]	.50 HP Direct Drive		1	1	1	1	1	1	1	1	1	1	1	0	0
	SELECT[2]	.75 HP Direct Drive		0	0	0	0	0	0	0	0	0	0	0	1	1
	SELECT[2]	1.0 HP Direct Drive		0	0	0	0	0	0	0	0	0	0	0	0	0
	SELECT[3]	Port & Driver Kit		1	1	1	1	1	1	1	1	1	1	1	1	1
ORDER IF NEEDED	**OPTIONAL SUSPENSION (CHOOSE HANGERS OR CHAIN):**															
	VEN91504C	5/16" x 3.5" Screw Hook		3	5	8	10	13	15	18	20	23	25	28	30	33
	713220 or 713223	Formed Hanger Galv (713220) or SS (713223)		3	5	8	10	13	15	18	20	23	25	28	30	33
	820099	#2 Hanger Chain (feet)		8	13	20	25	33	38	45	50	58	63	70	75	83

	CATALOG NUMBER	COMPONENT DESCRIPTION	HORIZONTAL INSIDE LENGTH OF SYSTEM											
			FT	140	150	160	170	180	190	200	210	220	230	240
			M	42.7	45.8	48.8	51.9	54.9	58	61	64.1	67.1	70.2	73.2
ORDER THE INDICATED QTY	**LINE COMPONENTS:**													
	730912	Lower Boot Less Slide Valve		1	1	1	1	1	1	1	1	1	1	1
	SELECT[4]	Adapter Plate		1	1	1	1	1	1	1	1	1	1	1
	730434	10' Straight PVC Tube		14	15	16	17	18	19	20	21	22	23	24
	730415	PVC Cement - 1/2 Pint		2	2	2	2	2	2	3	3	3	3	3
	725440	2.25" OD Auger (feet)		150	160	170	180	190	200	210	220	230	240	250
	SELECT[1]	Discharge Head		1	1	1	1	1	1	1	1	1	1	1
DRIVE UNIT	**DIRECT DRIVE UNIT:**													
	SELECT[2]	.50 HP Direct Drive		0	0	0	0	0	0	0	0	0	0	0
	SELECT[2]	.75 HP Direct Drive		1	1	1	1	1	0	0	0	0	0	0
	SELECT[2]	1.0 HP Direct Drive		0	0	0	0	0	1	1	1	1	1	1
	SELECT[3]	Port & Driver Kit		1	1	1	1	1	1	1	1	1	1	1
ORDER IF NEEDED	**OPTIONAL SUSPENSION (CHOOSE HANGERS OR CHAIN):**													
	VEN91504C	5/16" x 3.5" Screw Hook		35	38	40	43	45	48	50	53	55	58	60
	713220 or 713223	Formed Hanger Galv (713220) or SS (713223)		35	38	40	43	45	48	50	53	55	58	60
	820099	#2 Hanger Chain (feet)		88	95	100	108	113	120	125	133	138	145	150

1 Select steel or poly discharge head from pages 04-18 and 04-20.

2 Select motor & gearbox unit from pages 04-24 and 04-25 (See recommendation on selecting drive RPMs on page 04-30).

3 Select correct port & driver kit from page 04-23.

4 Select adapter plate (for steel or poly discharge head) from page 04-07.

Toll-free: 1-800-99VALCO
Phone: (+1) 419-678-8731
Fax: (+1) 419-678-2200

MODEL 730 - 3" COMPONENTS - 45° ENTRANCE SYSTEM

REFER TO 45° ENTRANCE DRAWING PAGE 04-27

	CATALOG NUMBER	COMPONENT DESCRIPTION	HORIZONTAL INSIDE LENGTH OF SYSTEM									
			FT	10	20	30	40	50	60	70	80	90	100
			M	3.1	6.1	9.2	12.2	15.3	18.3	21.4	24.4	27.5	30.5
ORDER THE INDICATED QTY	**LINE COMPONENTS:**												
	730499	45° Formed PVC Tube		2	2	2	2	2	2	2	2	2	2
	730434	10' Straight PVC Tube		2	3	4	5	6	7	8	9	10	11
	730415	PVC Cement - 1/2 Pint		1	1	1	1	1	1	1	1	2	2
	730440	2.38" OD Auger (feet)		30	40	50	60	70	80	90	100	110	120
	SELECT[1]	Discharge Head		1	1	1	1	1	1	1	1	1	1
DIRECT OR BELT DRIVE UNIT	**DIRECT DRIVE UNIT:**												
	SELECT[2]	.50 HP Direct Drive		1	1	1	1	1	1	1	1	0	0
	SELECT[2]	.75 HP Direct Drive		0	0	0	0	0	0	0	0	1	1
	SELECT[2]	1.0 HP Direct Drive		0	0	0	0	0	0	0	0	0	0
	SELECT[3]	Port & Driver Kit		1	1	1	1	1	1	1	1	1	1
	V-BELT DRIVE UNIT:												
	713230	V-Belt Drive Unit		1	1	1	1	1	1	1	1	1	1
	SELECT[3]	Port & Driver Kit		1	1	1	1	1	1	1	1	1	1
	SELECT[4]	Farm Duty Motor (see HP above)		1	1	1	1	1	1	1	1	1	1
ORDER IF NEEDED	**OPTIONAL SUSPENSION (CHOOSE HANGERS OR CHAIN):**												
	VEN91504C	5/16" x 3.5" Screw Hook		3	5	8	10	13	15	18	20	23	25
	713220 or 713223	Formed Hanger Galv (713220) or SS (713223)		3	5	8	10	13	15	18	20	23	25
	820099	#2 Hanger Chain (feet)		8	13	20	25	33	38	45	50	58	63

	CATALOG NUMBER	COMPONENT DESCRIPTION	HORIZONTAL INSIDE LENGTH OF SYSTEM									
			FT	110	120	130	140	150	160	170	180	190	200
			M	33.6	36.6	39.7	42.7	45.8	48.8	51.9	54.9	58	61
ORDER THE INDICATED QTY	**LINE COMPONENTS:**												
	730499	45° Formed PVC Tube		2	2	2	2	2	2	2	2	2	2
	730434	10' Straight PVC Tube		12	13	14	15	16	17	18	19	20	21
	730415	PVC Cement - 1/2 Pint		2	2	2	2	2	2	2	2	3	3
	730440	2.38" OD Auger (feet)		130	140	150	160	170	180	190	200	210	220
	SELECT[1]	Discharge Head		1	1	1	1	1	1	1	1	1	1
DIRECT OR BELT DRIVE UNIT	**DIRECT DRIVE UNIT:**												
	SELECT[2]	.50 HP Direct Drive		0	0	0	0	0	0	0	0	0	0
	SELECT[2]	.75 HP Direct Drive		1	1	1	1	1	0	0	0	0	0
	SELECT[2]	1.0 HP Direct Drive		0	0	0	0	0	1	1	1	1	1
	SELECT[3]	Port & Driver Kit		1	1	1	1	1	1	1	1	1	1
	V-BELT DRIVE UNIT:												
	713230	V-Belt Drive Unit		1	1	1	1	1	1	1	1	1	1
	SELECT[3]	Port & Driver Kit		1	1	1	1	1	1	1	1	1	1
	SELECT[4]	Farm Duty Motor (see HP above)		1	1	1	1	1	1	1	1	1	1
ORDER IF NEEDED	**OPTIONAL SUSPENSION (CHOOSE HANGERS OR CHAIN):**												
	VEN91504C	5/16" x 3.5" Screw Hook		28	30	33	35	38	40	43	45	48	50
	713220 or 713223	Formed Hanger Galv (713220) or SS (713223)		28	30	33	35	38	40	43	45	48	50
	820099	#2 Hanger Chain (feet)		70	75	83	88	95	100	108	113	120	125

1 Select steel or poly discharge head from pages 04-18 and 04-20.

2 Select motor & gearbox unit from pages 04-24 and 04-25.

3 Select correct port & driver kit from page 04-23.

4 Select farm duty motor from section 20.

Toll-free: 1-800-99VALCO
Phone: (+1) 419-678-8731
Fax: (+1) 419-678-2200

MODEL 730 - 3" COMPONENTS - 30° ENTRANCE SYSTEM

REFER TO 30° ENTRANCE DRAWING PAGE 04-28

	CATALOG NUMBER	COMPONENT DESCRIPTION	HORIZONTAL INSIDE LENGTH OF SYSTEM									
			FT	10	20	30	40	50	60	70	80	90	100
			M	3.1	6.1	9.2	12.2	15.3	18.3	21.4	24.4	27.5	30.5
ORDER THE INDICATED QTY	**LINE COMPONENTS:**												
	730499	45° Formed PVC Tube		1	1	1	1	1	1	1	1	1	1
	730434	10' Straight PVC Tube		2	3	4	5	6	7	8	9	10	11
	730415	PVC Cement - 1/2 Pint		1	1	1	1	1	1	1	1	2	2
	730440	2.38" OD Auger (feet)		30	40	50	60	70	80	90	100	110	120
	SELECT[1]	Discharge Head		1	1	1	1	1	1	1	1	1	1
DIRECT OR BELT DRIVE UNIT	**DIRECT DRIVE UNIT:**												
	SELECT[2]	.50 HP Direct Drive		1	1	1	1	1	1	1	1	0	0
	SELECT[2]	.75 HP Direct Drive		0	0	0	0	0	0	0	0	1	1
	SELECT[2]	1.0 HP Direct Drive		0	0	0	0	0	0	0	0	0	0
	SELECT[3]	Port & Driver Kit		1	1	1	1	1	1	1	1	1	1
	V-BELT DRIVE UNIT:												
	713230	V-Belt Drive Unit		1	1	1	1	1	1	1	1	1	1
	SELECT[3]	Port & Driver Kit		1	1	1	1	1	1	1	1	1	1
	SELECT[4]	Farm Duty Motor (see HP above)		1	1	1	1	1	1	1	1	1	1
ORDER IF NEEDED	**OPTIONAL SUSPENSION (CHOOSE HANGERS OR CHAIN):**												
	VEN91504C	5/16" x 3.5" Screw Hook		3	5	8	10	13	15	18	20	23	25
	713220 or 713223	Formed Hanger Galv (713220) or SS (713223)		3	5	8	10	13	15	18	20	23	25
	820099	#2 Hanger Chain (feet)		8	13	20	25	33	38	45	50	58	63

	CATALOG NUMBER	COMPONENT DESCRIPTION	HORIZONTAL INSIDE LENGTH OF SYSTEM									
			FT	110	120	130	140	150	160	170	180	190	200
			M	33.6	36.6	39.7	42.7	45.8	48.8	51.9	54.9	58	61
ORDER THE INDICATED QTY	**LINE COMPONENTS:**												
	730499	45° Formed PVC Tube		1	1	1	1	1	1	1	1	1	1
	730434	10' Straight PVC Tube		12	13	14	15	16	17	18	19	20	21
	730415	PVC Cement - 1/2 Pint		2	2	2	2	2	2	2	2	3	3
	730440	2.38" OD Auger (feet)		130	140	150	160	170	180	190	200	210	220
	SELECT[1]	Discharge Head		1	1	1	1	1	1	1	1	1	1
DIRECT OR BELT DRIVE UNIT	**DIRECT DRIVE UNIT:**												
	SELECT[2]	.50 HP Direct Drive		0	0	0	0	0	0	0	0	0	0
	SELECT[2]	.75 HP Direct Drive		1	1	1	1	1	0	0	0	0	0
	SELECT[2]	1.0 HP Direct Drive		0	0	0	0	0	1	1	1	1	1
	SELECT[3]	Port & Driver Kit		1	1	1	1	1	1	1	1	1	1
	V-BELT DRIVE UNIT:												
	713230	V-Belt Drive Unit		1	1	1	1	1	1	1	1	1	1
	SELECT[3]	Port & Driver Kit		1	1	1	1	1	1	1	1	1	1
	SELECT[4]	Farm Duty Motor (see HP above)		1	1	1	1	1	1	1	1	1	1
ORDER IF NEEDED	**OPTIONAL SUSPENSION (CHOOSE HANGERS OR CHAIN):**												
	VEN91504C	5/16" x 3.5" Screw Hook		28	30	33	35	38	40	43	45	48	50
	713220 or 713223	Formed Hanger Galv (713220) or SS (713223)		28	30	33	35	38	40	43	45	48	50
	820099	#2 Hanger Chain (feet)		70	75	83	88	95	100	108	113	120	125

1 Select steel or poly discharge head from pages 04-18 and 04-20.

2 Select motor & gearbox unit from pages 04-24 and 04-25.

3 Select correct port & driver kit from page 04-23.

4 Select farm duty motor from section 20.

Toll-free: 1-800-99VALCO
Phone: (+1) 419-678-8731
Fax: (+1) 419-678-2200

MODEL 730 - 3" COMPONENTS - PASS-THRU SYSTEM

REFER TO PASS-THRU SYSTEM DRAWING PAGE 04-29

	CATALOG NUMBER	COMPONENT DESCRIPTION	HORIZONTAL INSIDE LENGTH OF SYSTEM									
			FT	10	20	30	40	50	60	70	80	90	100
			M	3.1	6.1	9.2	12.2	15.3	18.3	21.4	24.4	27.5	30.5
ORDER THE INDICATED QTY	**LINE COMPONENTS:**												
	730499	45° Formed PVC Tube		2	2	2	2	2	2	2	2	2	2
	730434	10' Straight PVC Tube		3	4	5	6	7	8	9	10	11	12
	730415	PVC Cement - 1/2 Pint		1	1	1	1	1	1	1	2	2	2
	730440	2.38" OD Auger (feet)		50	60	70	80	90	100	110	120	130	140
	SELECT[1]	Discharge Head		1	1	1	1	1	1	1	1	1	1
DIRECT OR BELT DRIVE UNIT	**DIRECT DRIVE UNIT:**												
	SELECT[2]	.50 HP Direct Drive		1	1	1	0	0	0	0	0	0	0
	SELECT[2]	.75 HP Direct Drive		0	0	0	1	1	1	1	1	1	0
	SELECT[2]	1.0 HP Direct Drive		0	0	0	0	0	0	0	0	0	1
	SELECT[3]	Port & Driver Kit		1	1	1	1	1	1	1	1	1	1
	V-BELT DRIVE UNIT:												
	713230	V-Belt Drive Unit		1	1	1	1	1	1	1	1	1	1
	SELECT[3]	Port & Driver Kit		1	1	1	1	1	1	1	1	1	1
	SELECT[4]	Farm Duty Motor (see HP above)		1	1	1	1	1	1	1	1	1	1
ORDER IF NEEDED	**OPTIONAL SUSPENSION (CHOOSE HANGERS OR CHAIN):**												
	VEN91504C	5/16" x 3.5" Screw Hook		3	5	8	10	13	15	18	20	23	25
	713220 or 713223	Formed Hanger Galv (713220) or SS (713223)		3	5	8	10	13	15	18	20	23	25
	820099	#2 Hanger Chain (feet)		8	13	20	25	33	38	45	50	58	63

	CATALOG NUMBER	COMPONENT DESCRIPTION	HORIZONTAL INSIDE LENGTH OF SYSTEM					
			FT	110	120	130	140	150
			M	33.6	36.6	39.7	42.7	45.8
ORDER THE INDICATED QTY	**LINE COMPONENTS:**							
	730499	45° Formed PVC Tube		2	2	2	2	2
	730434	10' Straight PVC Tube		13	14	15	16	17
	730415	PVC Cement - 1/2 Pint		2	2	2	2	2
	730440	2.38" OD Auger (feet)		150	160	170	180	190
	SELECT[1]	Discharge Head		1	1	1	1	1
DIRECT OR BELT DRIVE UNIT	**DIRECT DRIVE UNIT:**							
	SELECT[2]	.50 HP Direct Drive		0	0	0	0	0
	SELECT[2]	.75 HP Direct Drive		0	0	0	0	0
	SELECT[2]	1.0 HP Direct Drive		1	1	1	1	0
	SELECT[3]	Port & Driver Kit		1	1	1	1	1
	V-BELT DRIVE UNIT:							
	713230	V-Belt Drive Unit		1	1	1	1	1
	SELECT[3]	Port & Driver Kit		1	1	1	1	1
	SELECT[4]	Farm Duty Motor (see HP above)		1	1	1	1	1
ORDER IF NEEDED	**OPTIONAL SUSPENSION (CHOOSE HANGERS OR CHAIN):**							
	VEN91504C	5/16" x 3.5" Screw Hook		28	30	33	35	38
	713220 or 713223	Formed Hanger Galv (713220) or SS (713223)		28	30	33	35	38
	820099	#2 Hanger Chain (feet)		70	75	83	88	95

1 Select steel or poly discharge head from pages 04-18 and 04-20.

2 Select motor & gearbox unit from pages 04-24 and 04-25.

3 Select correct port & driver kit from page 04-23.

4 Select farm duty motor from section 20.

Toll-free: 1-800-99VALCO
Phone: (+1) 419-678-8731
Fax: (+1) 419-678-2200

MODEL 730 - 3" COMPONENTS - EXTENDED LENGTH SYSTEM

REFER TO EXTENDED LENGTH SYSTEM DRAWING ON PAGE 04-30

	CATALOG NUMBER	COMPONENT DESCRIPTION	HORIZONTAL INSIDE LENGTH OF SYSTEM												
			FT	10	20	30	40	50	60	70	80	90	100	110	120	130
			M	3.1	6.1	9.2	12	15	18.3	21	24	28	31	34	37	40
ORDER THE INDICATED QTY	**LINE COMPONENTS:**															
	730944	Lower Boot Less Slide Valve	1	1	1	1	1	1	1	1	1	1	1	1	1
	SELECT[4]	Adapter Plate	1	1	1	1	1	1	1	1	1	1	1	1	1
	730434	10' Straight PVC Tube	1	2	3	4	5	6	7	8	9	10	11	12	13
	730415	PVC Cement - 1/2 Pint	1	1	1	1	1	1	1	1	1	2	2	2	2
	730440	2.38" OD Auger (feet)	20	30	40	50	60	70	80	90	100	110	120	130	140
	SELECT[1]	Discharge Head	1	1	1	1	1	1	1	1	1	1	1	1	1
DRIVE UNIT	**DIRECT DRIVE UNIT:**															
	SELECT[2]	.50 HP Direct Drive	1	1	1	1	1	1	1	1	1	1	1	0	0
	SELECT[2]	.75 HP Direct Drive	0	0	0	0	0	0	0	0	0	0	0	1	1
	SELECT[2]	1.0 HP Direct Drive	0	0	0	0	0	0	0	0	0	0	0	0	0
	SELECT[3]	Port & Driver Kit	1	1	1	1	1	1	1	1	1	1	1	1	1
ORDER IF NEEDED	**OPTIONAL SUSPENSION (CHOOSE HANGERS OR CHAIN):**															
	VEN91504C	5/16" x 3.5" Screw Hook	3	5	8	10	13	15	18	20	23	25	28	30	33
	713220 or 713223	Formed Hanger Galv (713220) or SS (713223)	3	5	8	10	13	15	18	20	23	25	28	30	33
	820099	#2 Hanger Chain (feet)	8	13	20	25	33	38	45	50	58	63	70	75	83

	CATALOG NUMBER	COMPONENT DESCRIPTION	HORIZONTAL INSIDE LENGTH OF SYSTEM											
			FT	140	150	160	170	180	190	200	210	220	230	240	250
			M	43	46	49	52	55	58	61	64	67	70	73	76
ORDER THE INDICATED QTY	**LINE COMPONENTS:**														
	730944	Lower Boot Less Slide Valve	1	1	1	1	1	1	1	1	1	1	1	1
	SELECT[4]	Adapter Plate	1	1	1	1	1	1	1	1	1	1	1	1
	730434	10' Straight PVC Tube	14	15	16	17	18	19	20	21	22	23	24	25
	730415	PVC Cement - 1/2 Pint	2	2	2	2	2	2	3	3	3	3	3	3
	730440	2.38" OD Auger (feet)	150	160	170	180	190	200	210	220	230	240	250	260
	SELECT[1]	Discharge Head	1	1	1	1	1	1	1	1	1	1	1	1
ORDER DIRECT OR V-BELT DRIVE	**DIRECT DRIVE UNIT:**													
	SELECT[2]	.50 HP Direct Drive	0	0	0	0	0	0	0	0	0	0	0	0
	SELECT[2]	.75 HP Direct Drive	1	1	1	1	1	0	0	0	0	0	0	0
	SELECT[2]	1.0 HP Direct Drive	0	0	0	0	0	1	1	1	1	1	1	0
	SELECT[3]	Port & Driver Kit	1	1	1	1	1	1	1	1	1	1	1	1
ORDER IF NEEDED	**OPTIONAL SUSPENSION (CHOOSE HANGERS OR CHAIN):**													
	VEN91504C	5/16" x 3.5" Screw Hook	35	38	40	43	45	48	50	53	55	58	60	63
	713220 or 713223	Formed Hanger Galv (713220) or SS (713223)	35	38	40	43	45	48	50	53	55	58	60	63
	820099	#2 Hanger Chain (feet)	88	95	100	108	113	120	125	133	138	145	150	158

1 Select steel or poly discharge head from pages 04-18 and 04-20.

2 Select motor & gearbox unit from pages 04-25 and 04-25 (See recommendation on selecting drive RPMs on page 04-30).

3 Select correct port & driver kit from page 04-23.

4 Select adapter plate (for steel or poly discharge head) from page 04-07.

Toll-free: 1-800-99VALCO
Phone: (+1) 419-678-8731
Fax: (+1) 419-678-2200

MODEL 735HV - 3.5" COMPONENTS - 45° ENTRANCE SYSTEM

REFER TO 45° ENTRANCE DRAWING PAGE 04-27

	CATALOG NUMBER	COMPONENT DESCRIPTION	HORIZONTAL INSIDE LENGTH OF SYSTEM									
			FT	10	20	30	40	50	60	70	80	90	100
			M	3.1	6.1	9.2	12.2	15.3	18.3	21.4	24.4	27.5	30.5
ORDER THE INDICATED QTY	**LINE COMPONENTS:**												
	735499	45° Formed PVC Tube		2	2	2	2	2	2	2	2	2	2
	735434	10' Straight PVC Tube		2	3	4	5	6	7	8	9	10	11
	730415	PVC Cement - 1/2 Pint		1	1	1	1	1	1	1	1	2	2
	735440	2.71" OD Auger (feet)		30	40	50	60	70	80	90	100	110	120
	SELECT[1]	Discharge Head		1	1	1	1	1	1	1	1	1	1
DIRECT OR BELT DRIVE UNIT	**DIRECT DRIVE UNIT:**												
	SELECT[2]	.50 HP Direct Drive		1	1	1	0	0	0	0	0	0	0
	SELECT[2]	.75 HP Direct Drive		0	0	0	1	1	1	1	1	1	0
	SELECT[2]	1.0 HP Direct Drive		0	0	0	0	0	0	0	0	0	1
	SELECT[3]	Port & Driver Kit		1	1	1	1	1	1	1	1	1	1
	V-BELT DRIVE UNIT:												
	713230	V-Belt Drive Unit		1	1	1	1	1	1	1	1	1	1
	SELECT[3]	Port & Driver Kit		1	1	1	1	1	1	1	1	1	1
	SELECT[4]	Farm Duty Motor (see HP above)		1	1	1	1	1	1	1	1	1	1
ORDER IF NEEDED	**OPTIONAL SUSPENSION (CHOOSE HANGERS OR CHAIN):**												
	VEN91504C	5/16" x 3.5" Screw Hook		3	5	8	10	13	15	18	20	23	25
	735220	Formed Hanger		3	5	8	10	13	15	18	20	23	25
	820099	#2 Hanger Chain (feet)		8	13	20	25	33	38	45	50	58	63

	CATALOG NUMBER	COMPONENT DESCRIPTION	HORIZONTAL INSIDE LENGTH OF SYSTEM					
			FT	110	120	130	140	150
			M	33.6	36.6	39.7	42.7	45.8
ORDER THE INDICATED QTY	**LINE COMPONENTS:**							
	735499	45° Formed PVC Tube		2	2	2	2	2
	735434	10' Straight PVC Tube		12	13	14	15	16
	730415	PVC Cement - 1/2 Pint		2	2	2	2	2
	735440	2.71" OD Auger (feet)		130	140	150	160	170
	SELECT[1]	Discharge Head		1	1	1	1	1
DIRECT OR BELT DRIVE UNIT	**DIRECT DRIVE UNIT:**							
	SELECT[2]	.50 HP Direct Drive		0	0	0	0	0
	SELECT[2]	.75 HP Direct Drive		0	0	0	0	0
	SELECT[2]	1.0 HP Direct Drive		1	1	1	1	1
	SELECT[3]	Port & Driver Kit		1	1	1	1	1
	V-BELT DRIVE UNIT:							
	713230	V-Belt Drive Unit		1	1	1	1	1
	SELECT[3]	Port & Driver Kit		1	1	1	1	1
	SELECT[4]	Farm Duty Motor (see HP above)		1	1	1	1	1
ORDER IF NEEDED	**OPTIONAL SUSPENSION (CHOOSE HANGERS OR CHAIN):**							
	VEN91504C	5/16" x 3.5" Screw Hook		28	30	33	35	38
	735220	Formed Hanger		28	30	33	35	38
	820099	#2 Hanger Chain (feet)		70	75	83	88	95

1 Select steel or poly discharge head from pages 04-18 and 04-20.

2 Select motor & gearbox unit from pages 04-24 and 04-25.

3 Select correct port & driver kit from page 04-23.

4 Select farm duty motor from section 20.

Toll-free: 1-800-99VALCO
Phone: (+1) 419-678-8731
Fax: (+1) 419-678-2200

MODEL 735HV - 3.5" COMPONENTS - 30° ENTRANCE SYSTEM

REFER TO 30° ENTRANCE DRAWING PAGE 04-28

	CATALOG NUMBER	COMPONENT DESCRIPTION	HORIZONTAL INSIDE LENGTH OF SYSTEM									
			FT	10	20	30	40	50	60	70	80	90	100
			M	3.1	6.1	9.2	12.2	15.3	18.3	21.4	24.4	27.5	30.5
ORDER THE INDICATED QTY	**LINE COMPONENTS:**												
	735499	45° Formed PVC Tube		1	1	1	1	1	1	1	1	1	1
	735434	10' Straight PVC Tube		2	3	4	5	6	7	8	9	10	11
	730415	PVC Cement - 1/2 Pint		1	1	1	1	1	1	1	1	2	2
	735440	2.71" OD Auger (feet)		30	40	50	60	70	80	90	100	110	120
	SELECT[1]	Discharge Head		1	1	1	1	1	1	1	1	1	1
DIRECT OR BELT DRIVE UNIT	**DIRECT DRIVE UNIT:**												
	SELECT[2]	.50 HP Direct Drive		1	1	1	0	0	0	0	0	0	0
	SELECT[2]	.75 HP Direct Drive		0	0	0	1	1	1	1	1	1	0
	SELECT[2]	1.0 HP Direct Drive		0	0	0	0	0	0	0	0	0	1
	SELECT[3]	Port & Driver Kit		1	1	1	1	1	1	1	1	1	1
	V-BELT DRIVE UNIT:												
	713230	V-Belt Drive Unit		1	1	1	1	1	1	1	1	1	1
	SELECT[3]	Port & Driver Kit		1	1	1	1	1	1	1	1	1	1
	SELECT[4]	Farm Duty Motor (see HP above)		1	1	1	1	1	1	1	1	1	1
ORDER IF NEEDED	**OPTIONAL SUSPENSION (CHOOSE HANGERS OR CHAIN):**												
	VEN91504C	5/16" x 3.5" Screw Hook		3	5	8	10	13	15	18	20	23	25
	735220	Formed Hanger		3	5	8	10	13	15	18	20	23	25
	820099	#2 Hanger Chain (feet)		8	13	20	25	33	38	45	50	58	63

	CATALOG NUMBER	COMPONENT DESCRIPTION	HORIZONTAL INSIDE LENGTH OF SYSTEM					
			FT	110	120	130	140	150
			M	33.6	36.6	39.7	42.7	45.8
ORDER THE INDICATED QTY	**LINE COMPONENTS:**							
	735499	45° Formed PVC Tube		1	1	1	1	1
	735434	10' Straight PVC Tube		12	13	14	15	16
	730415	PVC Cement - 1/2 Pint		2	2	2	2	2
	735440	2.71" OD Auger (feet)		130	140	150	160	170
	SELECT[1]	Discharge Head		1	1	1	1	1
DIRECT OR BELT DRIVE UNIT	**DIRECT DRIVE UNIT:**							
	SELECT[2]	.50 HP Direct Drive		0	0	0	0	0
	SELECT[2]	.75 HP Direct Drive		0	0	0	0	0
	SELECT[2]	1.0 HP Direct Drive		1	1	1	1	1
	SELECT[3]	Port & Driver Kit		1	1	1	1	1
	V-BELT DRIVE UNIT:							
	713230	V-Belt Drive Unit		1	1	1	1	1
	SELECT[3]	Port & Driver Kit		1	1	1	1	1
	SELECT[4]	Farm Duty Motor (see HP above)		1	1	1	1	1
ORDER IF NEEDED	**OPTIONAL SUSPENSION (CHOOSE HANGERS OR CHAIN):**							
	VEN91504C	5/16" x 3.5" Screw Hook		28	30	33	35	38
	735220	Formed Hanger		28	30	33	35	38
	820099	#2 Hanger Chain (feet)		70	75	83	88	95

1 Select steel or poly discharge head from pages 04-18 and 04-20.

2 Select motor & gearbox unit from pages 04-24 and 04-25.

3 Select correct port & driver kit from page 04-23.

4 Select farm duty motor from section 20.

Toll-free: 1-800-99VALCO
Phone: (+1) 419-678-8731
Fax: (+1) 419-678-2200

MODEL 735HV - 3.5" COMPONENTS - PASS-THRU SYSTEM

REFER TO PASS-THRU ENTRANCE DRAWING PAGE 04-29

	CATALOG NUMBER	COMPONENT DESCRIPTION	HORIZONTAL INSIDE LENGTH OF SYSTEM										
			FT	10	20	30	40	50	60	70	80	90	100
			M	3.1	6.1	9.2	12.2	15.3	18.3	21.4	24.4	27.5	30.5
ORDER THE INDICATED QTY	**LINE COMPONENTS:**												
	735499	45° Formed PVC Tube		2	2	2	2	2	2	2	2	2	2
	735434	10' Straight PVC Tube		3	4	5	6	7	8	9	10	11	12
	730415	PVC Cement - 1/2 Pint		1	1	1	1	1	1	1	2	2	2
	735440	2.71" OD Auger (feet)		50	60	70	80	90	100	110	120	130	140
	SELECT[1]	Discharge Head		1	1	1	1	1	1	1	1	1	1
DIRECT OR BELT DRIVE UNIT	**DIRECT DRIVE UNIT:**												
	SELECT[2]	.50 HP Direct Drive		0	0	0	0	0	0	0	0	0	0
	SELECT[2]	.75 HP Direct Drive		1	1	1	0	0	0	0	0	0	0
	SELECT[2]	1.0 HP Direct Drive		0	0	0	1	1	1	1	1	1	0
	SELECT[3]	Port & Driver Kit		1	1	1	1	1	1	1	1	1	1
	V-BELT DRIVE UNIT:												
	713230	V-Belt Drive Unit		1	1	1	1	1	1	1	1	1	1
	SELECT[3]	Port & Driver Kit		1	1	1	1	1	1	1	1	1	1
	SELECT[4]	Farm Duty Motor (see HP above)		1	1	1	1	1	1	1	1	1	1
ORDER IF NEEDED	**OPTIONAL SUSPENSION (CHOOSE HANGERS OR CHAIN):**												
	VEN91504C	5/16" x 3.5" Screw Hook		3	5	8	10	13	15	18	20	23	25
	735220	Formed Hanger		3	5	8	10	13	15	18	20	23	25
	820099	#2 Hanger Chain (feet)		8	13	20	25	33	38	45	50	58	63

1 Select steel or poly discharge head from pages 04-18 and 04-20.

2 Select motor & gearbox unit from pages 04-24 and 04-25.

3 Select correct port & driver kit from page 04-23.

4 Select farm duty motor from section 20.

Toll-free: 1-800-99VALCO
Phone: (+1) 419-678-8731
Fax: (+1) 419-678-2200

MODEL 735HV - 3.5" COMPONENTS - EXTENDED LENGTH SYSTEM

REFER TO EXTENDED LENGTH SYSTEM DRAWING ON PAGE 04-30

	CATALOG NUMBER	COMPONENT DESCRIPTION	HORIZONTAL INSIDE LENGTH OF SYSTEM									
			FT	10	20	30	40	50	60	70	80	90	100
			M	3.1	6.1	9.2	12.2	15.3	18.3	21.4	24.4	27.5	30.5
ORDER THE INDICATED QTY	**LINE COMPONENTS:**												
	735994	Lower Boot Less Slide Valve		1	1	1	1	1	1	1	1	1	1
	SELECT[4]	Adapter Plate		1	1	1	1	1	1	1	1	1	1
	735434	10' Straight PVC Tube		1	2	3	4	5	6	7	8	9	10
	730415	PVC Cement - 1/2 Pint		1	1	1	1	1	1	1	1	1	2
	735440	2.71" OD Auger (feet)		20	30	40	50	60	70	80	90	100	110
	SELECT[1]	Discharge Head		1	1	1	1	1	1	1	1	1	1
DRIVE UNIT	**DIRECT DRIVE UNIT:**												
	SELECT[2]	.50 HP Direct Drive		1	1	1	1	1	0	0	0	0	0
	SELECT[2]	.75 HP Direct Drive		0	0	0	0	0	1	1	1	1	1
	SELECT[2]	1.0 HP Direct Drive		0	0	0	0	0	0	0	0	0	0
	SELECT[3]	Port & Driver Kit		1	1	1	1	1	1	1	1	1	1
ORDER IF NEEDED	**OPTIONAL SUSPENSION (CHOOSE HANGERS OR CHAIN):**												
	VEN91504C	5/16" x 3.5" Screw Hook		3	5	8	10	13	15	18	20	23	25
	735220	Formed Hanger		3	5	8	10	13	15	18	20	23	25
	820099	#2 Hanger Chain (feet)		8	13	20	25	33	38	45	50	58	63

	CATALOG NUMBER	COMPONENT DESCRIPTION	HORIZONTAL INSIDE LENGTH OF SYSTEM									
			FT	110	120	130	140	150	160	170	180	190
			M	33.6	36.6	39.7	42.7	45.8	48.8	51.9	54.9	58
ORDER THE INDICATED QTY	**LINE COMPONENTS:**											
	735994	Lower Boot Less Slide Valve		1	1	1	1	1	1	1	1	1
	SELECT[4]	Adapter Plate		1	1	1	1	1	1	1	1	1
	735434	10' Straight PVC Tube		11	12	13	14	15	16	17	18	19
	730415	PVC Cement - 1/2 Pint		2	2	2	2	2	2	2	2	2
	735440	2.71" OD Auger (feet)		120	130	140	150	160	170	180	190	200
	SELECT[1]	Discharge Head		1	1	1	1	1	1	1	1	1
DRIVE UNIT	**DIRECT DRIVE UNIT:**											
	SELECT[2]	.50 HP Direct Drive		0	0	0	0	0	0	0	0	0
	SELECT[2]	.75 HP Direct Drive		1	0	0	0	0	0	0	0	0
	SELECT[2]	1.0 HP Direct Drive		0	1	1	1	1	1	1	1	1
	SELECT[3]	Port & Driver Kit		1	1	1	1	1	1	1	1	1
ORDER IF NEEDED	**OPTIONAL SUSPENSION (CHOOSE HANGERS OR CHAIN):**											
	VEN91504C	5/16" x 3.5" Screw Hook		28	30	33	35	38	40	43	45	48
	735220	Formed Hanger		28	30	33	35	38	40	43	45	48
	820099	#2 Hanger Chain (feet)		70	75	83	88	95	100	108	113	120

1 Select steel or poly discharge head from pages 04-18 and 04-20.

2 Select motor & gearbox unit from pages 04-24 and 04-25 (See recommendation on selecting drive RPMs on page 04-30).

3 Select correct port & driver kit from page 04-23.

4 Select adapter plate (for steel or poly discharge head) from page 04-07.

Toll-free: 1-800-99VALCO
Phone: (+1) 419-678-8731
Fax: (+1) 419-678-2200

MODEL 735HM - 3.5" COMPONENTS - 45° ENTRANCE SYSTEM

REFER TO 45° ENTRANCE DRAWING PAGE 04-27

	CATALOG NUMBER	COMPONENT DESCRIPTION	HORIZONTAL INSIDE LENGTH OF SYSTEM									
			FT	10	20	30	40	50	60	70	80	90	100
			M	3.1	6.1	9.2	12.2	15.3	18.3	21.4	24.4	27.5	30.5
ORDER THE INDICATED QTY	**LINE COMPONENTS:**												
	735499	45° Formed PVC Tube		2	2	2	2	2	2	2	2	2	2
	735434	10' Straight PVC Tube		2	3	4	5	6	7	8	9	10	11
	730415	PVC Cement - 1/2 Pint		1	1	1	1	1	1	1	1	2	2
	730440	2.38" OD Auger (feet)		30	40	50	60	70	80	90	100	110	120
	SELECT[1]	Discharge Head		1	1	1	1	1	1	1	1	1	1
DIRECT OR BELT DRIVE UNIT	**DIRECT DRIVE UNIT:**												
	SELECT[2]	.50 HP Direct Drive		1	1	1	0	0	0	0	0	0	0
	SELECT[2]	.75 HP Direct Drive		0	0	0	1	1	1	1	1	1	0
	SELECT[2]	1.0 HP Direct Drive		0	0	0	0	0	0	0	0	0	1
	SELECT[3]	Port & Driver Kit		1	1	1	1	1	1	1	1	1	1
	V-BELT DRIVE UNIT:												
	713230	V-Belt Drive Unit		1	1	1	1	1	1	1	1	1	1
	SELECT[3]	Port & Driver Kit		1	1	1	1	1	1	1	1	1	1
	SELECT[4]	Farm Duty Motor (see HP above)		1	1	1	1	1	1	1	1	1	1
ORDER IF NEEDED	**OPTIONAL SUSPENSION (CHOOSE HANGERS OR CHAIN):**												
	VEN91504C	5/16" x 3.5" Screw Hook		3	5	8	10	13	15	18	20	23	25
	735220	Formed Hanger		3	5	8	10	13	15	18	20	23	25
	820099	#2 Hanger Chain (feet)		8	13	20	25	33	38	45	50	58	63

	CATALOG NUMBER	COMPONENT DESCRIPTION	HORIZONTAL INSIDE LENGTH OF SYSTEM					
			FT	110	120	130	140	150
			M	33.6	36.6	39.7	42.7	45.8
ORDER THE INDICATED QTY	**LINE COMPONENTS:**							
	735499	45° Formed PVC Tube		2	2	2	2	2
	735434	10' Straight PVC Tube		12	13	14	15	16
	730415	PVC Cement - 1/2 Pint		2	2	2	2	2
	730440	2.38" OD Auger (feet)		130	140	150	160	170
	SELECT[1]	Discharge Head		1	1	1	1	1
DIRECT OR BELT DRIVE UNIT	**DIRECT DRIVE UNIT:**							
	SELECT[2]	.50 HP Direct Drive		0	0	0	0	0
	SELECT[2]	.75 HP Direct Drive		0	0	0	0	0
	SELECT[2]	1.0 HP Direct Drive		1	1	1	1	1
	SELECT[3]	Port & Driver Kit		1	1	1	1	1
	V-BELT DRIVE UNIT:							
	713230	V-Belt Drive Unit		1	1	1	1	1
	SELECT[3]	Port & Driver Kit		1	1	1	1	1
	SELECT[4]	Farm Duty Motor (see HP above)		1	1	1	1	1
ORDER IF NEEDED	**OPTIONAL SUSPENSION (CHOOSE HANGERS OR CHAIN):**							
	VEN91504C	5/16" x 3.5" Screw Hook		28	30	33	35	38
	735220	Formed Hanger		28	30	33	35	38
	820099	#2 Hanger Chain (feet)		70	75	83	88	95

1 Select steel or poly discharge head from pages 04-18 and 04-20.

2 Select motor & gearbox unit from pages 04-24 and 04-25.

3 Select correct port & driver kit from page 04-23.

4 Select farm duty motor from section 20.

Toll-free: 1-800-99VALCO
Phone: (+1) 419-678-8731
Fax: (+1) 419-678-2200

MODEL 735HM - 3.5" COMPONENTS - 30° ENTRANCE SYSTEM

REFER TO 30° ENTRANCE DRAWING PAGE 04-28

	CATALOG NUMBER	COMPONENT DESCRIPTION	HORIZONTAL INSIDE LENGTH OF SYSTEM									
			FT	10	20	30	40	50	60	70	80	90	100
			M	3.1	6.1	9.2	12.2	15.3	18.3	21.4	24.4	27.5	30.5
ORDER THE INDICATED QTY	**LINE COMPONENTS:**												
	735499	45° Formed PVC Tube		1	1	1	1	1	1	1	1	1	1
	735434	10' Straight PVC Tube		2	3	4	5	6	7	8	9	10	11
	730415	PVC Cement - 1/2 Pint		1	1	1	1	1	1	1	1	2	2
	730440	2.38" OD Auger (feet)		30	40	50	60	70	80	90	100	110	120
	SELECT[1]	Discharge Head		1	1	1	1	1	1	1	1	1	1
DIRECT OR BELT DRIVE UNIT	**DIRECT DRIVE UNIT:**												
	SELECT[2]	.50 HP Direct Drive		1	1	1	0	0	0	0	0	0	0
	SELECT[2]	.75 HP Direct Drive		0	0	0	1	1	1	1	1	1	0
	SELECT[2]	1.0 HP Direct Drive		0	0	0	0	0	0	0	0	0	1
	SELECT[3]	Port & Driver Kit		1	1	1	1	1	1	1	1	1	1
	V-BELT DRIVE UNIT:												
	713230	V-Belt Drive Unit		1	1	1	1	1	1	1	1	1	1
	SELECT[3]	Port & Driver Kit		1	1	1	1	1	1	1	1	1	1
	SELECT[4]	Farm Duty Motor (see HP above)		1	1	1	1	1	1	1	1	1	1
ORDER IF NEEDED	**OPTIONAL SUSPENSION (CHOOSE HANGERS OR CHAIN):**												
	VEN91504C	5/16" x 3.5" Screw Hook		3	5	8	10	13	15	18	20	23	25
	735220	Formed Hanger		3	5	8	10	13	15	18	20	23	25
	820099	#2 Hanger Chain (feet)		8	13	20	25	33	38	45	50	58	63

	CATALOG NUMBER	COMPONENT DESCRIPTION	HORIZONTAL INSIDE LENGTH OF SYSTEM					
			FT	110	120	130	140	150
			M	33.6	36.6	39.7	42.7	45.8
ORDER THE INDICATED QTY	**LINE COMPONENTS:**							
	735499	45° Formed PVC Tube		1	1	1	1	1
	735434	10' Straight PVC Tube		12	13	14	15	16
	730415	PVC Cement - 1/2 Pint		2	2	2	2	2
	730440	2.38" OD Auger (feet)		130	140	150	160	170
	SELECT[1]	Discharge Head		1	1	1	1	1
DIRECT OR BELT DRIVE UNIT	**DIRECT DRIVE UNIT:**							
	SELECT[2]	.50 HP Direct Drive		0	0	0	0	0
	SELECT[2]	.75 HP Direct Drive		0	0	0	0	0
	SELECT[2]	1.0 HP Direct Drive		1	1	1	1	1
	SELECT[3]	Port & Driver Kit		1	1	1	1	1
	V-BELT DRIVE UNIT:							
	713230	V-Belt Drive Unit		1	1	1	1	1
	SELECT[3]	Port & Driver Kit		1	1	1	1	1
	SELECT[4]	Farm Duty Motor (see HP above)		1	1	1	1	1
ORDER IF NEEDED	**OPTIONAL SUSPENSION (CHOOSE HANGERS OR CHAIN):**							
	VEN91504C	5/16" x 3.5" Screw Hook		28	30	33	35	38
	735220	Formed Hanger		28	30	33	35	38
	820099	#2 Hanger Chain (feet)		70	75	83	88	95

1 Select steel or poly discharge head from pages 04-18 and 04-20.

2 Select motor & gearbox unit from pages 04-24 and 04-25.

3 Select correct port & driver kit from page 04-23.

4 Select farm duty motor from section 20.

Toll-free: 1-800-99VALCO
Phone: (+1) 419-678-8731
Fax: (+1) 419-678-2200

MODEL 735HM - 3.5" COMPONENTS - PASS-THRU SYSTEM

REFER TO PASS-THRU ENTRANCE DRAWING PAGE 04-29

	CATALOG NUMBER	COMPONENT DESCRIPTION	HORIZONTAL INSIDE LENGTH OF SYSTEM										
			FT	10	20	30	40	50	60	70	80	90	100
			M	3.1	6.1	9.2	12.2	15.3	18.3	21.4	24.4	27.5	30.5
ORDER THE INDICATED QTY	**LINE COMPONENTS:**												
	735499	45° Formed PVC Tube		2	2	2	2	2	2	2	2	2	2
	735434	10' Straight PVC Tube		3	3	4	5	6	7	8	9	10	11
	730415	PVC Cement - 1/2 Pint		1	1	1	1	1	1	1	1	2	2
	730440	2.38" OD Auger (feet)		50	60	70	80	90	100	110	120	130	140
	SELECT[1]	Discharge Head		1	1	1	1	1	1	1	1	1	1
DIRECT OR BELT DRIVE UNIT	**DIRECT DRIVE UNIT:**												
	SELECT[2]	.50 HP Direct Drive		0	0	0	0	0	0	0	0	0	0
	SELECT[2]	.75 HP Direct Drive		1	1	1	0	0	0	0	0	0	0
	SELECT[2]	1.0 HP Direct Drive		0	0	0	1	1	1	1	1	1	0
	SELECT[3]	Port & Driver Kit		1	1	1	1	1	1	1	1	1	1
	V-BELT DRIVE UNIT:												
	713230	V-Belt Drive Unit		1	1	1	1	1	1	1	1	1	1
	SELECT[3]	Port & Driver Kit		1	1	1	1	1	1	1	1	1	1
	SELECT[4]	Farm Duty Motor (see HP above)		1	1	1	1	1	1	1	1	1	1
ORDER IF NEEDED	**OPTIONAL SUSPENSION (CHOOSE HANGERS OR CHAIN):**												
	VEN91504C	5/16" x 3.5" Screw Hook		3	5	8	10	13	15	18	20	23	25
	735220	Formed Hanger		3	5	8	10	13	15	18	20	23	25
	820099	#2 Hanger Chain (feet)		8	13	20	25	33	38	45	50	58	63

1 Select steel or poly discharge head from pages 04-18 and 04-20.

2 Select motor & gearbox unit from pages 04-24 and 04-25.

3 Select correct port & driver kit from page 04-23.

4 Select farm duty motor from section 20.

Toll-free: 1-800-99VALCO
Phone: (+1) 419-678-8731
Fax: (+1) 419-678-2200

MODEL 735HM - 3.5" COMPONENTS - EXTENDED LENGTH SYSTEM

REFER TO EXTENDED LENGTH SYSTEM DRAWING ON PAGE 04-30

	CATALOG NUMBER	COMPONENT DESCRIPTION	HORIZONTAL INSIDE LENGTH OF SYSTEM									
			FT	10	20	30	40	50	60	70	80	90	100
			M	3.1	6.1	9.2	12.2	15.3	18.3	21.4	24.4	27.5	30.5
ORDER THE INDICATED QTY	**LINE COMPONENTS:**												
	735985	Lower Boot Less Slide Valve		1	1	1	1	1	1	1	1	1	1
	SELECT[4]	Adapter Plate		1	1	1	1	1	1	1	1	1	1
	735434	10' Straight PVC Tube		1	2	3	4	5	6	7	8	9	10
	730415	PVC Cement - 1/2 Pint		1	1	1	1	1	1	1	1	1	2
	730440	2.38" OD Auger (feet)		20	30	40	50	60	70	80	90	100	120
	SELECT[1]	Discharge Head		1	1	1	1	1	1	1	1	1	1
DRIVE UNIT	**DIRECT DRIVE UNIT:**												
	SELECT[2]	.50 HP Direct Drive		1	1	1	1	1	0	0	0	0	0
	SELECT[2]	.75 HP Direct Drive		0	0	0	0	0	1	1	1	1	1
	SELECT[2]	1.0 HP Direct Drive		0	0	0	0	0	0	0	0	0	0
	SELECT[3]	Port & Driver Kit		1	1	1	1	1	1	1	1	1	1
ORDER IF NEEDED	**OPTIONAL SUSPENSION (CHOOSE HANGERS OR CHAIN):**												
	VEN91504C	5/16" x 3.5" Screw Hook		3	5	8	10	13	15	18	20	23	25
	735220	Formed Hanger		3	5	8	10	13	15	18	20	23	25
	820099	#2 Hanger Chain (feet)		8	13	20	25	33	38	45	50	58	63

	CATALOG NUMBER	COMPONENT DESCRIPTION	HORIZONTAL INSIDE LENGTH OF SYSTEM									
			FT	110	120	130	140	150	160	170	180	190
			M	33.6	36.6	39.7	42.7	45.8	48.8	51.9	54.9	58
ORDER THE INDICATED QTY	**LINE COMPONENTS:**											
	735985	Lower Boot Less Slide Valve		1	1	1	1	1	1	1	1	1
	SELECT[4]	Adapter Plate		1	1	1	1	1	1	1	1	1
	735434	10' Straight PVC Tube		11	12	13	14	15	16	17	18	19
	730415	PVC Cement - 1/2 Pint		2	2	2	2	2	2	2	2	2
	730440	2.38" OD Auger (feet)		120	130	140	150	160	170	180	190	200
	SELECT[1]	Discharge Head		1	1	1	1	1	1	1	1	1
DRIVE UNIT	**DIRECT DRIVE UNIT:**											
	SELECT[2]	.50 HP Direct Drive		0	0	0	0	0	0	0	0	0
	SELECT[2]	.75 HP Direct Drive		1	0	0	0	0	0	0	0	0
	SELECT[2]	1.0 HP Direct Drive		0	1	1	1	1	1	1	1	0
	SELECT[3]	Port & Driver Kit		1	1	1	1	1	1	1	1	1
ORDER IF NEEDED	**OPTIONAL SUSPENSION (CHOOSE HANGERS OR CHAIN):**											
	VEN91504C	5/16" x 3.5" Screw Hook		28	30	33	35	38	40	43	45	48
	735220	Formed Hanger		28	30	33	35	38	40	43	45	48
	820099	#2 Hanger Chain (feet)		70	75	83	88	95	100	108	113	120

1 Select steel or poly discharge head from pages 04-18 and 04-20.

2 Select motor & gearbox unit from pages 04-24 and 04-25 (See recommendation on selecting drive RPMs on page 04-30).

3 Select correct port & driver kit from page 04-23.

4 Select adapter plate (for steel or poly discharge head) from page 04-07.

Toll-free: 1-800-99VALCO
Phone: (+1) 419-678-8731
Fax: (+1) 419-678-2200

SECTION 04.1
4.25" (108mm) 740 FLEXIBLE AUGER FILL SYSTEMS

IN THIS CATALOG SECTION

PAGE NUMBER	CONTENTS
04-51	Table of Contents & Fill System Disclaimers
04-52 & 04-53	Fill Systems Entrance Drawings / HP requirements & Application Notes
04-54	Upper Boot / Adapter
04-55	Lower Boots / Unloaders
04-56	Flexible Auger / Steel Tubes
04-57	Tubes, Hangers & Feed Screener
04-58	Drop Outlets & Downspout Tubes
04-59	Discharge Heads
04-60	Discharge Head Kits / Port & Driver Kits
04-61	Flag System Accessories / Switches & Controls
04-62	Direct Drive Table
04-63	Direct Drive Motors and Gear Box Units

REPAIRS

SEE REPAIR LISTING & REFERENCE MATERIAL IN SEPARATE CATALOG

VAL-CO SYSTEM DISCLAIMER

Recommendations, opinions, or advice given by Val-Co regarding equipment, systems, or installation shall be accepted at the user's own discretion and shall not constitute any warranty or guarantee of such products or their performance. Val-Co assumes no obligation or liability on account of any recommendation, opinions or advice as to the choice, installation, or use of products.

Before installation is made on any product or system, the user has a responsibility to research and comply with all federal, state, and local codes which may apply to the location and installation.

VAL-CO PRODUCT DISCLAIMER

Val-Co products are designed and manufactured to provide reliable performance. Even reliable products may experience occasional failures, due to variance of installation, environment, and the recognized life cycle of a product. Due to the possibility of failure, the user should provide adequate backup systems and an alarm or acknowledge willingness to accept the risk of loss.

WARRANTY

SEE CATALOG SECTION 01 TO REVIEW WARRANTY & DISCLAIMERS

Toll-free: 1-800-99VALCO
Phone: (+1) 419-678-8731
Fax: (+1) 419-678-2200

4.25" (108mm) 740 FLEXIBLE AUGER FILL SYSTEMS

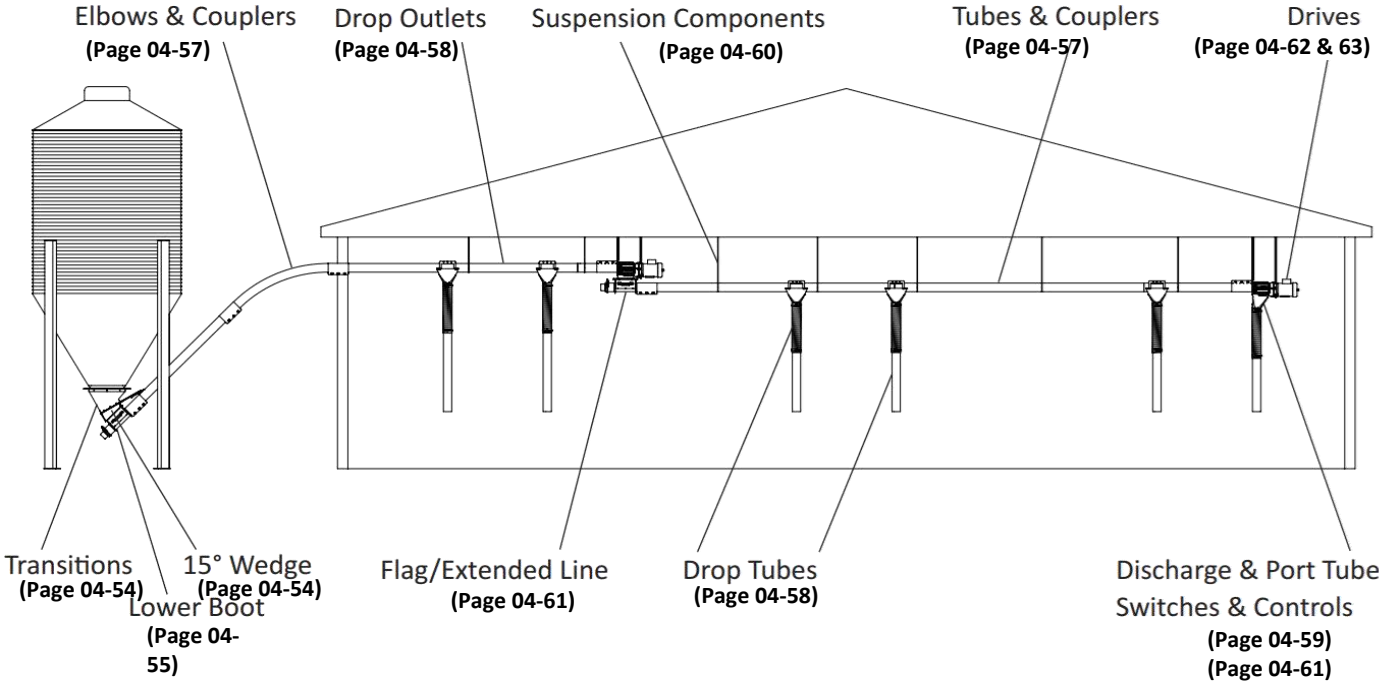

Model 740 Motor HP Requirements

Carrying capacities based on feed density of 40 lb./cu.ft

45° Entry System – 8' high max		
Max Length (Total Len. of System)	359 rpm (60Hz) 296 rpm (50Hz)	441 rpm (60Hz) 365 rpm (50Hz)
50'	0.75	1.0
100'	1.0	1.5
150'	1.5	2.00
180'	2.0	NA

Straight Extension System		
Max Length (Total Len. of System)	359 rpm (60Hz) 296 rpm (50Hz)	441 rpm (60Hz) 365 rpm (50Hz)
75'	0.75	1.0
135'	1.0	1.5
185'	1.5	2.0
205'	2.0	NA

Application Notes

Length is **TOTAL** length of system
359rpm: HP requirements are given with estimated delivery rate at 220 lb/min maximum.
Can vary down depending on restrictor setting. (Density 40lb/cu. ft.)
441 rpm: HP requirements are given with estimated delivery rate at 250 lb/min maximum
Can vary down depending on restrictor setting. (Density 40lb/cu. ft.)
45° Entry System height restricted to 8'. For each additonal ft, reduce max length by 5ft.
Reduce the line length by half for high moisture corn applicatons (18%-27%)
For all 740 systems:
Each additonal 90° of bend, reduce the max length by 30'
Each additonal 45° of bend, reduce the max length by 15
Each additonal 30° of bend, reduce the max length by 10'
Each additonal 15° of bend, reduce the max length by 5
Reduce max length by 30' for angles steeper than 45°. Maximum incline angle 60°
For each additonal pass-thru bin, reduce the line length by 50'
Maximum recommended run tme per day is 4 hours
Maximum recommended partcle size 3/16" x 1/2
Feed moisture content is less than 18%
Steel tubes are 4.25" (108mm) outside diameter
Flexible auger is 3.55" (90mm) outsde diameter

Toll-free: 1-800-99VALCO
Phone: (+1) 419-678-8731
Fax: (+1) 419-678-2200

4.25" (108mm) 740 FLEXIBLE AUGER FILL SYSTEMS

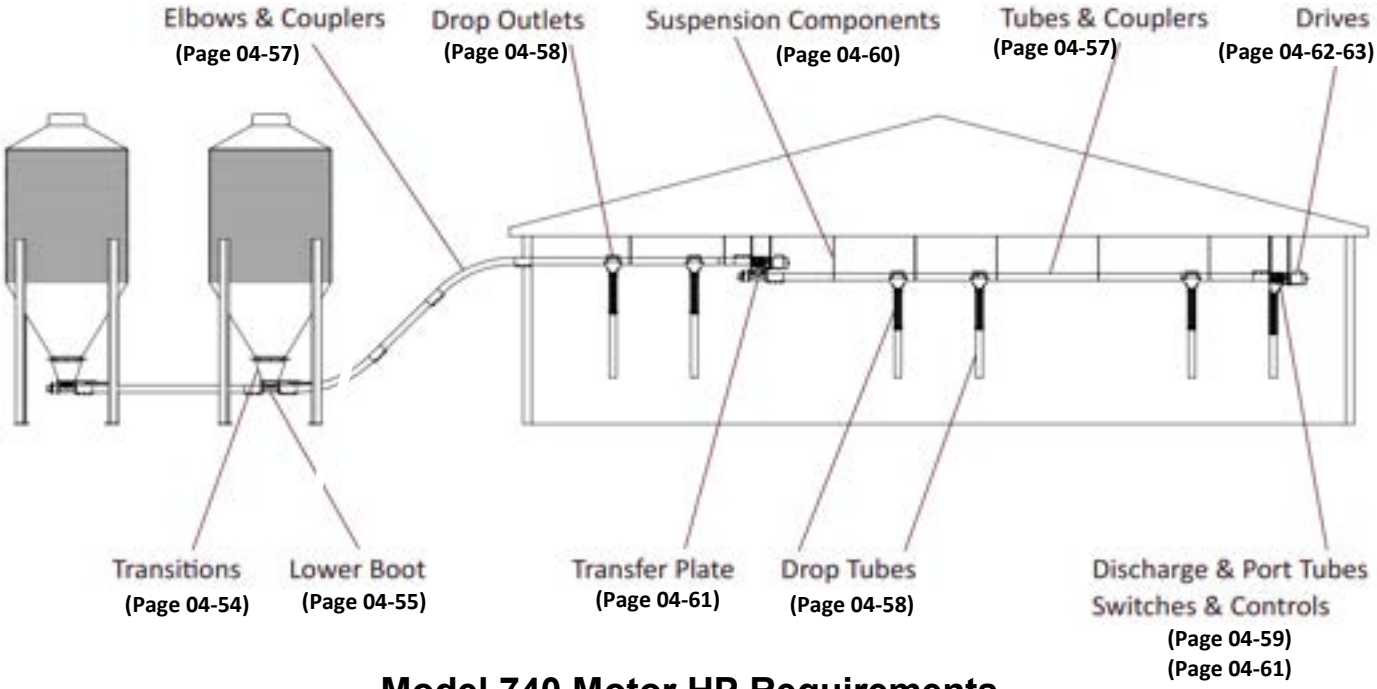

Model 740 Motor HP Requirements

Carrying capacities based on feed density of 40 lb./cu.ft

Single Pass-Thru 450 Entry System - 8' high max		
Max Length (Total Len. of System)	359 rpm (60Hz) 296 rpm (50Hz)	441 rpm (60Hz) 365 rpm (50Hz)
35'	1.0	1.5
85'	1.5	2.0
115'	2.0	NA

Straight Extension System		
Max Length (Total Len. of System)	359 rpm (60Hz) 296 rpm (50Hz)	441 rpm (60Hz) 365 rpm (50Hz)
75'	0.75	1.0
135'	1.0	1.5
185'	1.5	2.0
205'	2.0	NA

Application Notes

Length is **TOTAL** length of system
359rpm: HP requirements are given with estimated delivery rate at 220 lb/min maximum.
Can vary down depending on restrictor setting. (Density 40lb/cu. ft.)
441 rpm: HP requirements are given with estimated delivery rate at 250 lb/min maximum
Can vary down depending on restrictor setting. (Density 40lb/cu. ft.)
45° Entry System height restricted to 8'. For each additonal ft, reduce max length by 5ft.
Reduce the line length by half for high moisture corn applicatons (18%-27%)
For all 740 systems:
Each additonal 90° of bend, reduce the max length by 30'
Each additonal 45° of bend, reduce the max length by 15
Each additonal 30° of bend, reduce the max length by 10'
Each additonal 15° of bend, reduce the max length by 5
Reduce max length by 30' for angles steeper than 45°. Maximum incline angle 60°
For each additonal pass-thru bin, reduce the line length by 50'
Maximum recommended run tme per day is 4 hours
Maximum recommended partcle size 3/16" x 1/2
Feed moisture content is less than 18%
Steel tubes are 4.25" (108mm) outside diameter
Flexible auger is 3.55" (90mm) outsde diameter

Toll-free: 1-800-99VALCO
Phone: (+1) 419-678-8731
Fax: (+1) 419-678-2200

UPPER BOOT TRANSITIONS & LOWER BOOT KITS

UPPER BOOT TRANSITIONS

CATALOG #	ITEM DESCRIPTION	SHIP WEIGHT LBS.	SHIP WEIGHT KG.	LIST PRICE
500475	30 Degree Plastic Upper Boot Transition - Green	4.9	2.2	
500857	30 Degree Plastic Upper Boot Transition - Translucent	4.9	2.2	
500575	30 Degree Plastic Upper Boot Transition - Clear	4.6	2.1	
500485	Straight Plastic Upper Boot Transition - Green	5.5	2.5	
500855	Straight Plastic Upper Boot Transition - Translucent	5.6	2.5	
500585	Straight Plastic Upper Boot Transition - Clear	4.8	2.2	
700010	Straight Double Plastic Upper Boot Transition - Green	7.0	3.2	
501480	7.5º Transition Wedge Assembly Kit	2.9	1.4	
501470	15º Transition Wedge Assembly Kit (Use in conjunction with 30º Boot to achieve 45º)	4.4	2.0	

500475 - Green
500857 - Translucent
500575 - Clear

500485 - Green
500855 - Translucent
500585 - Clear

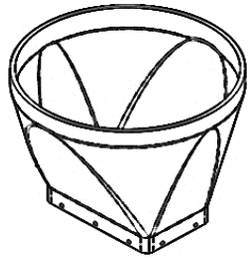

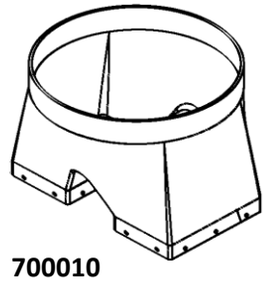

700010

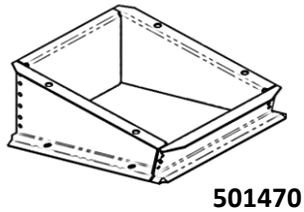

501470 - 15º
501480 -7.5º

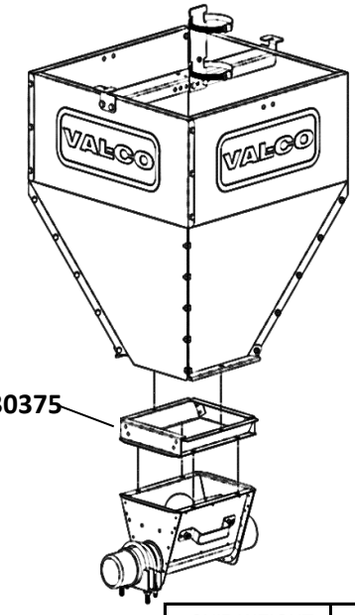

730375

CATALOG #	ITEM DESCRIPTION	SHIP WEIGHT LBS.	SHIP WEIGHT KG.	LIST PRICE
730375	Lower boot adapter to attach to Broiler Feed Hoppers	2.6	1.8	

Toll-free: 1-800-99VALCO
Phone: (+1) 419-678-8731
Fax: (+1) 419-678-2200

MODEL 740 - 4.25" (108mm) LOWER BOOTS KITS

CATALOG #	ITEM DESCRIPTION	SHIP WEIGHT LBS.	SHIP WEIGHT KG.	LIST PRICE
740531	4.25" Pass Thru Single Boot with Restrictor and Single Slide Valve	23.0	10.4	
740527	4.25" Single Outlet Lower Boot - Complete with Anchor & Bearing Kit - without Slide Valve	27.9	12.7	
740526	4.25" Single Outlet Lower Boot - Complete with Anchor & Bearing Kit and Single Slide Valve	43.8	19.9	
740532	4.25" Pass Thru Twin Boot with Restrictor and Single Slide Valve	40.9	18.5	
740533	4.25" Pass Thru Twin Boot Restrictor and Split Slide Valve	33.9	15.4	
740530	4.25" Twin Outlet Lower Boot - Complete with Anchor & Bearing Kits (2) - without Slide Valve	55.9	25.4	
740528	4.25" Twin Outlet Lower Boot - Complete with Anchor & Bearing Kits (2) and Single Slide Valve	60.9	9.8	
740529	4.25" Twin Outlet Lower Boot - Complete with Anchor & Bearing Kits (2) and Split Slide Valve	61.4	27.9	
740552	4.25" Twin Boot Plate Restrictor	1.3	0.6	

FLEXIBLE AUGER LOWER BOOT KIT COMPONENT REQUIREMENTS

		Anchor & Bearing Kit	Slide Valve		Boot Housing		
	COMPONENT ➔						
	SHIP WEIGHT ➔	14.9	6.0	6.8	15.1	30.3	2.8
	CATALOG NUMBER & DESCRIPTION ➔	740474 4.25"	500471 Single	500371 Twin/Split	740467 4.25" Single	740519 4.25" Twin ASM	740959 Restrictor
CATALOG # OF BOOT KIT	BOOT KIT DESCRIPTION	Quantity in Kit					
740526	4.25" Single Outlet Lower Boot - Single Slide Valve	1	1		1		
740527	4.25" Single Outlet Lower Boot - Less Slide Valve	1			1		
740528	4.25" Twin Outlet Lower Boot - Single Slide Valve	2	1			1	
740529	4.25" Twin Outlet Lower Boot - Split Slide Valve	2		1		1	
740530	4.25" Twin Outlet Lower Boot - Less Slide Valve	2				1	
740531	4.25" Pass Thru Single Boot with Restrictor and Single Slide Valve		1		1		1
740532	4.25" Pass Thru Twin Boot with Restrictor and Single Slide Valve		1			1	1
740533	4.25" Pass Thru Twin Boot Restrictor and Split Slide Valve			1			2

Toll-free: 1-800-99VALCO
Phone: (+1) 419-678-8731
Fax: (+1) 419-678-2200

FLEXIBLE AUGER

MODEL 740 4.25" (108mm) FLEXIBLE AUGER

CATALOG #	ITEM DESCRIPTION	SHIP WEIGHT LBS.	SHIP WEIGHT KG.	LIST PRICE
740440-0040	40' 3.55" O.D. Auger - Model 740HV Systems	51.6	23.4	
740440-0050	50' 3.55" O.D. Auger - Model 740HV Systems	81.0	36.7	
740440-0060	60' 3.55" O.D. Auger - Model 740HV Systems	106.0	48.1	
740440-0070	70' 3.55" O.D. Auger - Model 740HV Systems	90.3	41.0	
740440-0080	80' 3.55" O.D. Auger - Model 740HV Systems	103.2	46.8	
740440-0090	90' 3.55" O.D. Auger - Model 740HV Systems	116.1	52.7	
740440-0100	100' 3.55" O.D. Auger - Model 740HV Systems	129.0	58.5	
740440-0110	110' 3.55" O.D. Auger - Model 740HV Systems	141.9	64.4	
740440-0120	120' 3.55" O.D. Auger - Model 740HV Systems	154.8	70.2	
740440-0130	130' 3.55" O.D. Auger - Model 740HV Systems	167.7	76.1	
740440-0140	140' 3.55" O.D. Auger - Model 740HV Systems	202.0	91.6	
740440-0150	150' 3.55" O.D. Auger - Model 740HV Systems	193.5	87.8	
740440-0160	160' 3.55" O.D. Auger - Model 740HV Systems	206.4	93.6	
740440-0170	170' 3.55" O.D. Auger - Model 740HV Systems	250.0	113.4	
740440-0180	180' 3.55" O.D. Auger - Model 740HV Systems	232.2	105.3	
740440-0190	190' 3.55" O.D. Auger - Model 740HV Systems	245.1	111.2	
740440-0200	200' 3.55" O.D. Auger - Model 740HV Systems	308.0	139.7	
740440-0210	210' 3.55" O.D. Auger - Model 740HV Systems	318.0	144.2	

Toll-free: 1-800-99VALCO
Phone: (+1) 419-678-8731
Fax: (+1) 419-678-2200

FLEXIBLE AUGER TUBES & HANGERS

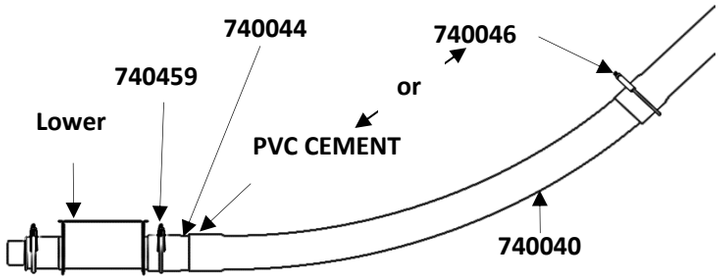

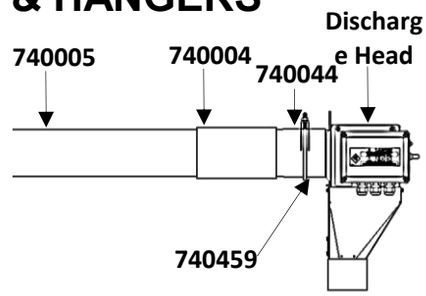

MODEL 740 (108mm) - 4.50" OD PVC

CATALOG #	ITEM DESCRIPTION	SHIP WEIGHT LBS.	SHIP WEIGHT KG.	LIST PRICE
740005	10' PVC Tube - Belled, 4.50" OD	19.0	8.6	
740005-048	10' PVC Tube - Belled, 4.50" OD - Bundle of 48	21.4	9.7	
740040	4.50" OD x 45° PVC Elbow	10.0	4.5	
740040-024	4.50" OD x 45° PVC Elbow - Bundle of 24	21.4	9.7	
740044	Coupler - PVC to Metal	1.4	0.6	
740004	Coupler - PVC to PVC	1.3	0.6	
740004-016	Coupler - PVC to PVC - Carton of 16	21.4	9.7	
740459	4 1/2" U-Bolt Clamp - Zinc Plated	1.1	0.5	
740046	5" U-Bolt Clamp - Zinc Plated	1.1	0.5	

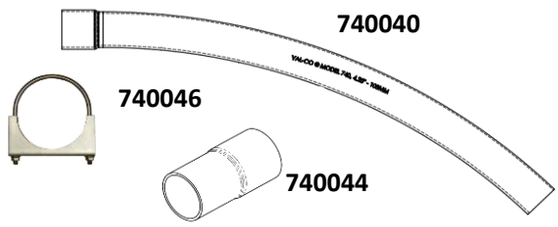

Installation Guide
https://val-co.it/990386

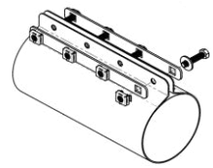

MODEL 740 (108mm)- 4.25" OD STEEL TUBES

740494	4.25" OD 45 Degree Steel Elbow *(No Bell, Need 1 Coupler per Elbow)*	15.8	7.1	
740443	4.25" OD 10' Belled Steel Tube *(need 1 clamp per tube)*	41.0	18.6	
740469	4.25" OD Steel Tube Coupler with Hardware *(needed for every non-belled connection)*	3.3	1.5	
740459	4 1/2" U-Bolt Clamp - Zinc Plated *(needed for every Belled Tube connection)*	1.1	0.5	

PVC CEMENT

730415	PVC Cement - 1/2 Pint	1.0	0.5	
VG125-QT	PVC Cement - Quart	0.0	0.0	

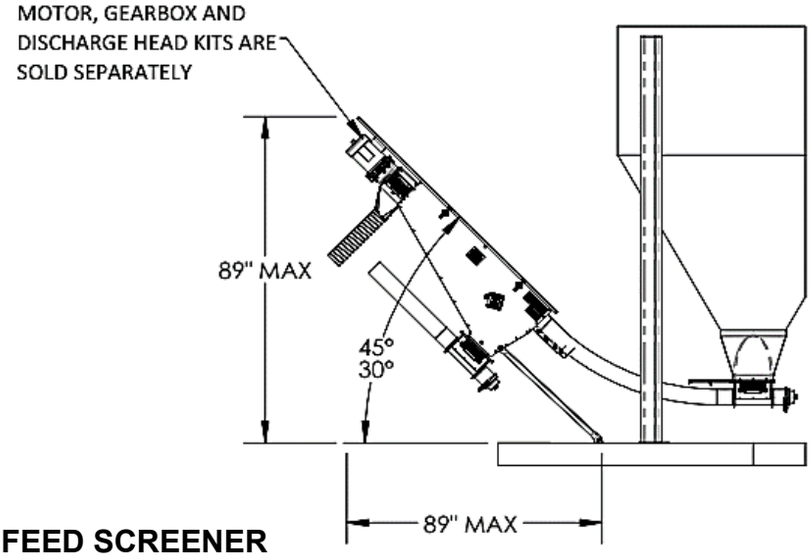

MODEL 740 (108mm) - FEED SCREENER

501530	740 Auger Feed Screener	341.0	154.7	

Toll-free: 1-800-99VALCO
Phone: (+1) 419-678-8731
Fax: (+1) 419-678-2200

MODEL 740 DROP OUTLETS & DOWNSPOUT TUBES

MODEL 740 - 4.25" (108mm) DROP OUTLETS

CATALOG #	ITEM DESCRIPTION	SHIP WEIGHT LBS.	SHIP WEIGHT KG.	LIST PRICE
740580	4.25" All-Out Drop with Shutoff	6.4	2.9	
740483	4" ID 25' Flexible Drop Tube - Grey	23.0	10.4	
740473	4" ID 1' Clear Flexible Drop Tube - Clear (price per foot)	1.0	0.5	
740477	3"-5" Stainless Steel Hose Clamp	0.1	0.0	
740520	4" OD x 10' Long HDPE Drop Tube	5.0	2.3	
735421	4.375" ID x 6' Long Lower Drop	3.2	1.5	

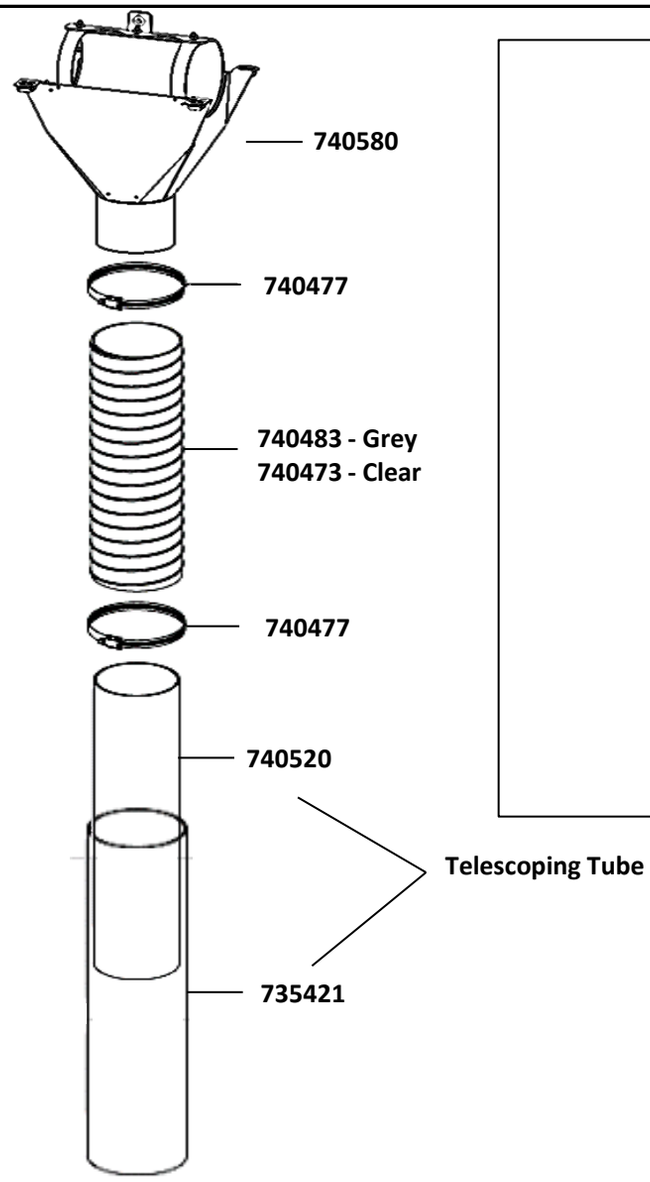

740580 Drop Outlet

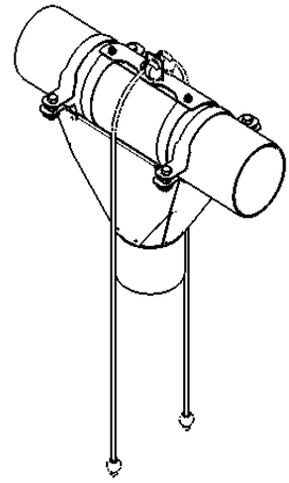

Assembled

Toll-free: 1-800-99VALCO
Phone: (+1) 419-678-8731
Fax: (+1) 419-678-2200

DISCHARGE HEADS

TO ORDER A COMPLETE DRIVE UNIT

DIRECT DRIVE UNIT
Order a steel (below) discharge head kit
and port & driver kit from page 04-59. Also order a direct drive
motor & gearbox unit from pages 04-61 thru 04-62.

STEEL DISCHARGE HEAD KITS

	CATALOG #	ITEM DESCRIPTION	SHIP WEIGHT LBS.	SHIP WEIGHT KG.	LIST PRICE
SINGLE PHASE	740521	Steel Discharge Head Kit - Basic Control - For use in 1 or 3PH applications - Shipped in two cartons: (1) 740466 Basic Steel Head (1) 730505 Control Box - Motor Relay Not Included	12.7	5.8	
SINGLE PHASE	740522	Steel Discharge Head Kit - Basic Unit & Proximity Sensor - For use in 1 or 3PH applications - Shipped in three cartons: (1) 740466 Basic Steel Head (1) 730505 Control Box - Motor Relay Not Included (1) 730465 Proximity Sensor	13.1	5.9	
SINGLE PHASE	740524	Steel Discharge Head Kit - Relay Control - For use in 1PH applications only - Shipped in two cartons: (1) 740466 Basic Steel Head (1) 730501 Control Box - 1PH Motor Relay included	12.8	5.8	
SINGLE PHASE	740525	Steel Discharge Head Kit - Relay Control & Proximity Sensor - For use in 1PH applications only - Shipped in three cartons: (1) 740466 Basic Steel Head (1) 730501 Control Box - 1PH Motor Relay included (1) 730465 Proximity Sensor	13.2	6.0	
3-PHASE	740521	Steel Discharge Head Kit - Basic Control - For use in 1 or 3PH phase applications - Shipped in two cartons: (1) 740466 Basic Steel Head (1) 730505 Control Box - Motor Relay Not Included	12.7	5.8	
3-PHASE	740522	Steel Discharge Head Kit - Basic Unit & Proximity Sensor - For use in 1 or 3PH applications - Shipped in three cartons: (1) 740466 Basic Steel Head (1) 730505 Control Box - Motor Relay Not Included (1) 730465 Proximity Sensor	13.1	5.9	

Mechanical back-up safety switch is included with all control options.
Proximity or mechanical feed level sensing may be used with all controls.
- See catalog section 04-59 for feed level sensing options
Customer must provide motor relay for all basic controls

Toll-free: 1-800-99VALCO
Phone: (+1) 419-678-8731
Fax: (+1) 419-678-2200

DISCHARGE HEAD KIT COMPONENTS

CATALOG #	ITEM DESCRIPTION	SHIP WEIGHT LBS.	SHIP WEIGHT KG.	LIST PRICE
740466	Basic Steel Discharge Head	11.0	5.0	
730486	Discharge Head - Gasket Replacement Kit	1.3	0.6	
730505	Basic Control Box - Motor Relay Not Included - For Single or Three Phase Applications	2.3	1.0	
730501	Relay Control Box - 1PH Motor Relay Included - For Single Phase Applications Only	2.6	1.2	
730549	Proximity Sensor with Time Delay and Mount Kit - Long Delay - 90-265v, 3 sec. - 10 min. Delay	0.4	0.2	
730465	Proximity Sensor with Time Delay and Mount Kit - Long Delay - 90-265v, 3 sec. - 60 min. Delay	0.9	0.4	

PORT & DRIVER KITS FOR STEEL DISCHARGE HEAD
FOR DIRECT DRIVE WITH 7/8" OUTPUT SHAFT

CATALOG #	ITEM DESCRIPTION	SHIP WEIGHT LBS.	SHIP WEIGHT KG.	LIST PRICE
740490	4.25" HM Port & Driver Kit for Direct Drive Unit - 7/8" Bore Driver	7.6	3.4	

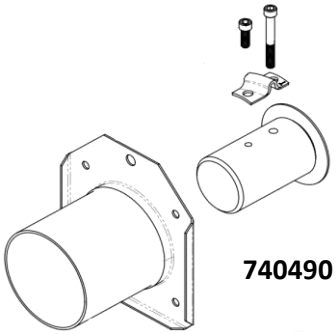

740490

VEN91504C

820099

SUSPENSION COMPONENTS

CATALOG #	ITEM DESCRIPTION	SHIP WEIGHT LBS.	SHIP WEIGHT KG.	LIST PRICE
VEN91504C	Screw Hook 5/16" X 3 1/2" Zinc Plated	2.9	1.3	
820099	2/0 Double Loop Chain (Per Foot)	0.3	0.1	

Steel tube must be supported every 8-10 ft. Refer to manual for more information.

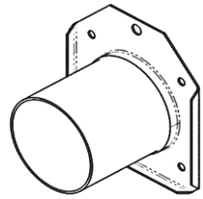

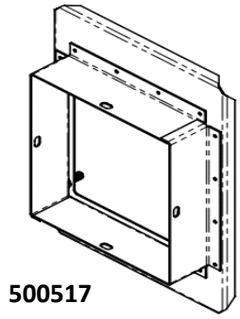

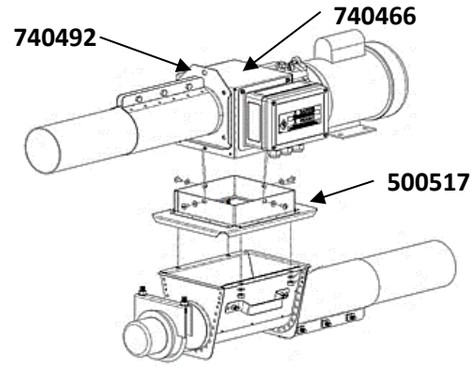

FLAG LINE & EXTENDED LENGTH SYSTEM ACCESSORIES

CATALOG #	ITEM DESCRIPTION	SHIP WEIGHT LBS.	SHIP WEIGHT KG.	LIST PRICE
740492	Model 740 Tube and Port Plate	2.6	1.2	
740466	Model 740 Discharge Head Body	11.0	5.0	
500517	Adapter - Steel *Connects Steel Discharge Head or Steel Outlet Box to Lower Boot Less Slide Valve for flag line & extended length system applications.*	3.1	1.4	
730505	Basic Control Box with backup Switch - Motor Relay Not Included - For Single or Three Phase Applications	2.3	1.0	
730501	Relay Control Box with backup Switch - 1PH Motor Relay Included - For Single Phase Applications Only	2.6	1.2	

- Above outlet boxes used in conjunction with 500517/500590 Adapters (above) and Lower Boot Assembly Less Slide Valve (order separately from pages 04-54) to make complete flag system hopper. Hopper switches are not included.
- Discharge head requires 1 control box with backup switch.

SWITCHES & CONTROLS

Hopper Switch Levels

460057	Hopper Level Control Switch - Proximity	5.0	2.3	
720097	Adjustable-Mechanical hopper level control 220V, 20amp, 1-3phase, 50-60hz	4.8	2.2	
451364	Hanger for Poly Hopper Switch - Galvanized	1.6	0.7	

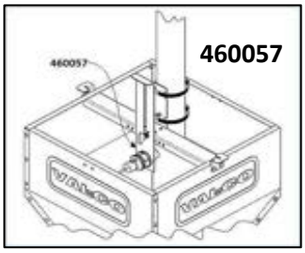

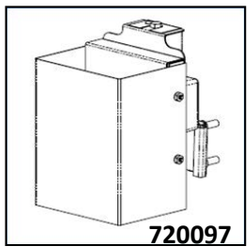

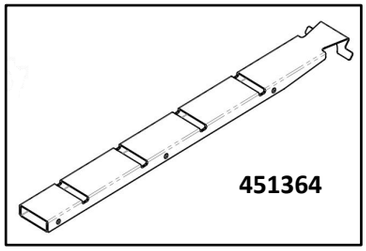

Discharge Head / Drop Tube Switch

730465	Proximity Sensor with Time Delay and Mount Kit	0.9	0.4	
735620	Downspout Feed Control Mechanical Switch FITS 3.5" I.D. DOWNSPOUT TUBE	7.7	3.5	

Boot Safety Switch

730965	Boot Safety Switch - Mechanical 110-220v, 20 amp, 1 phase, 50-60hz	1.1	0.5	
455800	Boot Safety Switch Proximity switch, 0-60 sec. delay, adj. sensitivity, 1P/220v/50-60	4.0	1.8 0	

Time Clock / Timer

700025	24 Hour Time Clock - 230V	3.0	1.4	
700024	24 Hour Time Clock - 115V	3.0	1.4	

DIRECT DRIVE MOTOR AND GEARBOXES

1 PHASE - 7/8" OUTPUT SHAFTS

	Electrical Info	115V, 50HZ, 1PH	115V, 60HZ, 1PH	230V, 50HZ, 1PH	230V, 60HZ, 1PH	OUTPUT SPEED (50/60HZ) -->	GEARBOX -->	
	VOLTS	110	110	220	220			
	HERTZ	50	60	50	60			
	PHASE	1	1	1	1			
HP	0.50	735380	735380	735380	735380	296/359	730089	Drive Output RPMs are approximate based on motor RPMs of 1425 @ 50Hz and 1725 @ 60 Hz. (Actual Output RPM's may vary)
	0.75	735381	735381	735381	735381			
	1.00	735527	735382	735527	735382			
	1.50	735528	735383	735528	735383			
	2.00			740505	740504			
	0.50	735360	735360	735360	735360	365/441	730124	
	0.75	735361	735361	735361	735361			
	1.00	735342	735362	735342	735362			
	1.50	735343	735363	735343	735363			
	2.00			740509	740508			

For pricing, see page 04-62
More electrical options and speeds are available upon request

DIRECT DRIVE MOTOR AND GEARBOXES

3 PHASE - 7/8" OUTPUT SHAFTS

	Electrical Info	230V, 60HZ, 3PH	460V, 60HZ, 3PH	190V, 50HZ, 3PH	380V, 50HZ, 3PH	OUTPUT SPEED (50/60HZ) -->	GEARBOX -->	
	VOLTS	230	460	230	460			
	HERTZ	60	60	50	50			
	PHASE	3	3	3	3			
HP	0.50	735330	735330	735330	735330	296/359	730089	Drive Output RPMs are approx. based on motor RPMs of 1425 @ 50Hz & 1725 @ 60Hz (Actual Output RPM's may vary)
	0.75	735331	735331	735331	735331			
	1.00	735332	735332	735332	735332			
	1.50	735333	735333	735333	735333			
	2.00	740506	740506	740507	740507			
HP	0.50	735510	735510	735510	735510	365/441	730124	
	0.75	735511	735511	735511	735511			
	1.00	735512	735512	735512	735512			
	1.50	735513	735513	735513	735513			
	2.00	740510	740510	740512	740512			

For pricing, see page 04-62
More electrical options and speeds are available upon request

DIRECT DRIVE MOTOR & GEARBOX UNITS - 7/8" OUTPUT SHAFT

CATALOG #	ITEM DESCRIPTION	SHIP WEIGHT LBS.	SHIP WEIGHT KG.	LIST PRICE
735330	DRIVE,.50HP,296/359RPM,7/8SH,190/380&208-230/460V,50&60H,3P	33.0	15.0	
735331	DRIVE,.75HP,296/359RPM,7/8SH,190/380&208-230/460V,50&60H,3P	33.6	15.2	
735332	DRIVE,1.0HP,296/359RPM,7/8SH,190/380&208-230/460V,50&60H,3P	43.0	19.5	
735333	DRIVE,1.5HP,296/359RPM,7/8SH,190/380&208-230/460V,50&60H,3P	50.0	22.7	
735342	DRIVE,1.0HP,365RPM, 7/8SH, 110/220V, 50H, 1P	46.0	20.9	
735343	DRIVE,1.5HP,365RPM, 7/8SH,110/220V, 50H, 1P	80.0	36.3	
735360	DRIVE,.50HP,365/441RPM,7/8SH, 115/230V, 50/60H, 1P	34.0	15.4	
735361	DRIVE, .75HP,365/441RPM, 7/8SH, 115/230V, 50/60H, 1P	53.0	24.0	
735362	DRIVE, 1.0HP, 441RPM, 7/8SH, 115/230V, 60H, 1P	46.0	20.9	
735363	DRIVE, 1.5HP, 441RPM, 7/8SH, 115/230V, 60H, 1P	51.8	23.5	
735380	DRIVE,.50HP,296/359RPM,7/8SH, 115/230V,50/60H, 1P	34.0	15.4	
735381	DRIVE,.75HP,296/359RPM,7/8SH, 115/230V,50/60H, 1P	41.9	19.0	
735382	DRIVE, 1.0HP,359RPM, 7/8SH, 115/230V, 60H, 1P	43.0	19.5	
735383	DRIVE, 1.5HP,359RPM,7/8SH, 115/230V, 60H, 1P	51.8	23.5	
735510	DRIVE,.50HP,365/441RPM,7/8SH, 190/380&208-230/460V,50&60H,3P	52.0	23.6	
735511	DRIVE,.75HP,365/441RPM,7/8SH,190/380&208-230/460V,50&60H,3P	35.0	15.9	
735512	DRIVE,1.0HP,365/441RPM,7/8SH, 190/380&208-230/460V,50&60H,3P	45.0	20.4	
735513	DRIVE,1.5HP,365/441RPM,7/8SH,190/380&208-230/460V,50&60H,3P	50.4	22.8	
735527	DRIVE,1.0HP,296RPM,7/8SH,110/220V,50H,1P	58.5	26.5	
735528	DRIVE,1.5HP,296RPM,7/8SH,110/220V,50H,1P	80.0	36.3	
740504	DRIVE, 2HP, 359RPM, 7/8SH,230V,60H,1P	55.7	25.3	
740505	DRIVE, 2HP, 296/359RPM, 7/8SH,230V,50H,1P	55.8	25.3	
740506	DRIVE, 2HP, 359RPM, 7/8SH,230/460V, 60H, 3P	48.7	22.1	
740507	DRIVE, 2HP, 296/359RPM, 7/8SH, 230/460V, 50/60H, 3P	66.7	30.3	
740508	DRIVE, 2HP, 441RPM, 7/8SH, 230V, 60H, 1P	55.8	25.3	
740509	DRIVE, 2HP, 365/441RPM, 7/8SH, 230V, 50H, 1P	55.8	25.3	
740510	DRIVE, 2HP, 441RPM, 7/8SH, 230/460V, 60H, 3P	48.0	21.8	
740512	DRIVE, 2HP, 365/441RPM, 7/8SH, 230/460V, 50/60H, 3P	55.8	25.3	

See page 04-60 for Direct Drive Table

PINION TOOL

740517	Pinion Spacer - Field Tool	0.5	0.2	

This Page Intentionally Left Blank

SECTION 05
CHAIN DISK FEEDING SYSTEM

IN THIS CATALOG SECTION

PAGE NUMBER	CONTENTS
05-02	How to Order a Chain Disk Feed Delivery System
05-03	Drive Units & Drive Suspension
05-04	Fill Hoppers, Hopper Adapters & Line Transfer
05-05	90° Corner & Chain Disk
05-06	Tubes & Hangers
05-07	Drop Outlets & Downspout Tubes
05-08	Controls, Timers & Sensors

HOW TO ORDER A CHAIN DISK FEED DELIVERY SYSTEM

SYSTEM GUIDELINES

- Determine effective length of the chain disk feed delivery system:
  + Total Feet of Chain Disk
  + 25 Feet Per Corner
  = Effective Length of System

Chain Disk Tube	Max. # Corners	Max. Chain (ft)	Max. Effective Length (ft)	Max. Daily Run Time (min)	Flexible Auger System Flow Rate (lbs/min)	Effective Length (ft)	Chain Disk Capacity (lbs/min)
2.36" OD PVC Tube	24	900 (4 Corners)	1000	120	35	100-1000	35
2.37" OD Steel	24	1700 (4 Corners)	1800	240	35	100-1500	35
					30	1500-1800	30

1. ORDER DRIVE UNIT

- Select drive unit from page 05-03
- Include suspension kit or wall mount kit if required

2. ORDER A FEED INPUT CONFIGURATION

- Select fill hopper or line transfer from page 05-04
- If fill hopper is selected, choose a discharge head or other adapter options

3. ORDER CORNERS

4. ORDER CHAIN DISK

- Chain disk is available in 147.6 foot (45M) lengths as shown on page 05-05.
- Include additional 20 feet of chain for the drive unit.
- Include chain connector links.

5. ORDER TUBES

- Select tubes from page 05-06 as needed to meet required length - include extra lengths as tubes might have to be cut to accommodate drops & other components.
- Include lengths of PVC Clear Tube - sections of this clear tube will be included at various points throughout the system for feed inspection & if a tube mounted sensor is used.
- If using PVC tube, be sure to order 1 PVC tube splice per tube and PVC cement.
- If using steel tube, be sure to order 1 steel tube coupler per tube

6. ORDER TUBE HANGING COMPONENTS

- PVC tubing must be supported every 4 feet or less.
- Steel tubing must be supported every 8 feet or less.

7. ORDER DROP OUTLETS & DOWNSPOUTS

- Order drop outlets, downspouts, & accessories as needed from page 05-07.
- If volume drops are required, order separately from catalog section 06 (Be sure to include drop winching).

8. ORDER CONTROL UNIT, TIMERS & SENSORS

- Select and order Control Unit & Accessories as needed from page 05-08.

Toll-free: 1-800-99VALCO
Phone: (+1) 419-678-8731
Fax: (+1) 419-678-2200

CHAIN DISK FEED SYSTEM
DRIVE UNITS & SUSPENSION KITS

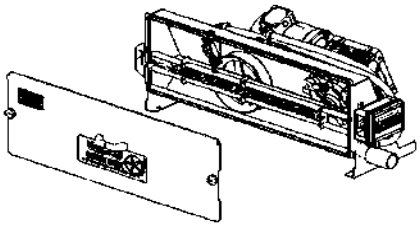

780160 (1 phase motor)
780162 (3 phase motor)
Drive is fully assembled and
motor is pre-wired

DRIVE UNIT

CATALOG #	ITEM DESCRIPTION	SHIP WEIGHT LBS.	SHIP WEIGHT KG.	LIST PRICE
780160	Drive Unit - Single Phase Motor: 2HP, 208-230VAC, 60HZ, 1PH	211.0	95.7	
780162	Drive Unit - Three Phase Motor: 2HP, 230/460V 60HZ, 190/380V 50HZ 3PH	211.0	95.7	

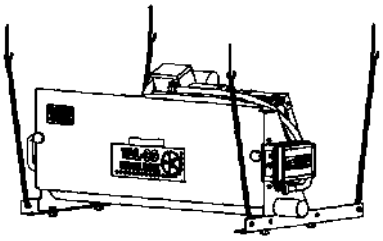

780310
(Drive unit not included)

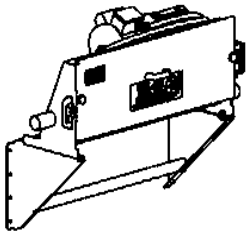

780300
(Drive unit not included)

DRIVE UNIT SUSPENSION KITS

CATALOG #	ITEM DESCRIPTION	SHIP WEIGHT LBS.	SHIP WEIGHT KG.	LIST PRICE
780310	Drive Unit Suspension Kit - Includes support rails, chain, and hardware	15.0	6.8	
780300	Drive Unit Wall Mount Kit - Includes brackets & hardware for drive assembly - Hardware to attach to wall is not included	10.5	4.7	

CHAIN DISK FEED SYSTEM
FILL HOPPERS, HOPPER ADAPTERS & LINE TRANSFER

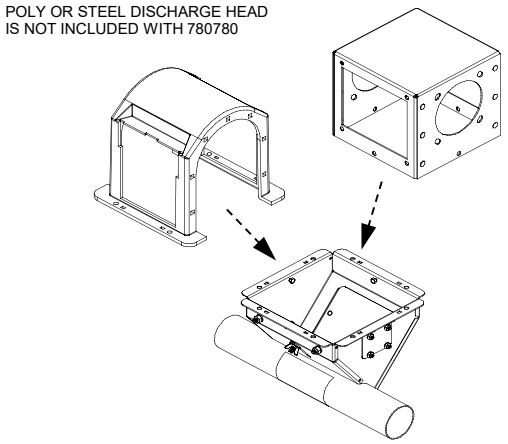

780780

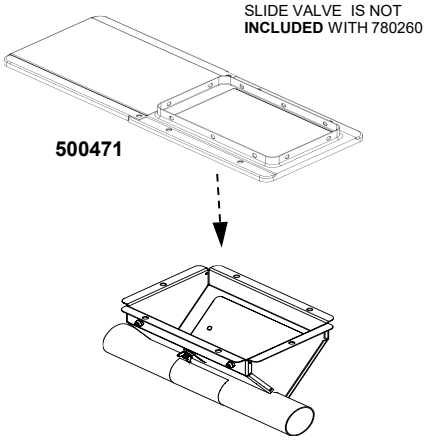

780260

FILL HOPPERS

CATALOG #	ITEM DESCRIPTION	SHIP WEIGHT LBS.	SHIP WEIGHT KG.	LIST PRICE
780780	Fill Hopper - Discharge Head - No adapter needed to attach discharge heads - See catalog pages 04-14 through 04-18 for discharge head kit selections	6.8	3.1	
780260	Fill Hopper - Bin Boot - Use under bulk feed bins	8.8	4.0	

WARNING: ALL CHAIN DISK SYSTEMS ARE SUSCEPTIBLE TO DAMAGE DUE TO FROZEN OR HARDENED FEED.

780795

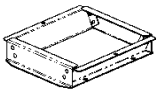

730375

HOPPER ADAPTERS

CATALOG #	ITEM DESCRIPTION	SHIP WEIGHT LBS.	SHIP WEIGHT KG.	LIST PRICE
500471	Bin Boot Slide Valve - Single Plate	6.0	2.7	
780795	Plate, Fill Hopper Adaptor for 3.5" All Out Drop (See 05-07) - Attaches to the 780780 Fill Hopper	0.9	0.4	
730375	Adapter, Fill Hopper to Feed Hoppers - Attaches to 780260 Fill Hopper - See catalog page 15-06 for 100 & 200 LB Hoppers	2.6	1.2	

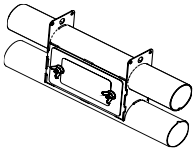

780170

LINE TRANSFER

CATALOG #	ITEM DESCRIPTION	SHIP WEIGHT LBS.	SHIP WEIGHT KG.	LIST PRICE
780170	Line-to-Line Transfer Unit - Used from chain disk line to chain disk line	5.2	2.4	

Toll-free: 1-800-99VALCO
Phone: (+1) 419-678-8731
Fax: (+1) 419-678-2200

CHAIN DISK FEED SYSTEM
90° CORNER & CHAIN DISK

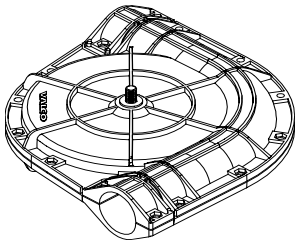

780090

CORNER

CATALOG #	ITEM DESCRIPTION	SHIP WEIGHT LBS.	SHIP WEIGHT KG.	LIST PRICE
780090	ClearFlo 90° Corner Assembly with self-cleaning Wheel - works with steel or pvc tubes	12.1	5.5	

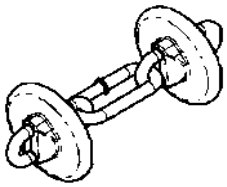

780068
150' per Bag

780072
780073

CHAIN & DISK

CATALOG #	ITEM DESCRIPTION	SHIP WEIGHT LBS.	SHIP WEIGHT KG.	LIST PRICE
780068	Bag of 147.6' (45m) - 46mm Chain & Disk	55.0	24.9	
780072	Chain Connector Link (QTY 1) - For 780068 Chain	0.1	0.02	
780073	Chain Connector Link (QTY 12) - For 780068 Chain	0.6	0.27	

Toll-free: 1-800-99VALCO
Phone: (+1) 419-678-8731
Fax: (+1) 419-678-2200

WWW.VAL-CO.COM

CHAIN DISK FEED SYSTEM
TUBES & HANGERS

PVC TUBES

CATALOG #	ITEM DESCRIPTION	SHIP WEIGHT LBS.	SHIP WEIGHT KG.	LIST PRICE
780600	White PVC Tube - 2.36" x 10' (60mm x 3m)	5.0	2.3	
780610	Clear PVC Tube - 2.36" x 10' (60mm x 3m)	4.3	1.9	
780601	PVC Tube Splice - 2.36"/60mm (White Only)	0.3	0.1	
730415	PVC Cement - 1/2 Pint	1.0	0.5	
VG125	PVC Cement - Quart	2.2	1.0	

STEEL TUBES

CATALOG #	ITEM DESCRIPTION	SHIP WEIGHT LBS.	SHIP WEIGHT KG.	LIST PRICE
775030	Steel Tube, 2.37" OD x 10 ft. long, G90	12.3	5.6	
775129	Steel Tube, 2.37" OD x 20 ft. long, G90	24.5	11.1	
780081	Stainless Steel Tube, 2.37" OD x 10 ft. long, G90	16.4	7.4	
780039	Stainless Steel Tube, 2.37" OD x 20 ft. long, G90	8.1	3.7	
775130	Steel Tube Coupler, Galvanized, Per Piece	1.0	0.5	
775026	Steel Tube Coupler, Galvanized, Carton of 15	15.5	7.0	
775201	Stainless Steel Tube Coupler, SS, Per Piece	1.1	0.5	
775202	Stainless Steel Tube Coupler, SS, Carton of 15	15.7	7.1	

Steel Tube Coupler

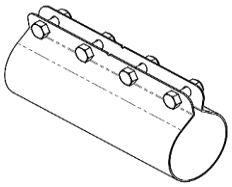

720220

820099

VEN91504C ..... 5/16" x 3 1/2"
713441 ..... 5/16" x 5"

820055 (50/box)

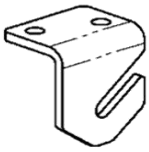

VEN91507C

TUBE HANGING

CATALOG #	ITEM DESCRIPTION	SHIP WEIGHT LBS.	SHIP WEIGHT KG.	LIST PRICE
720220	Tube Hanger - Galvanized	0.3	0.14	
820099	#2 Double Loop Hanger Chain per ft	0.17	0.08	
VEN91504C	5/16" x 3½" Screw Hook	0.1	0.05	
713441	5/16" x 5" Screw Hook	0.1	0.05	
820055	Ceiling Bracket and Hardware for steel trusses - 50/box	8.7	3.95	
VEN91507C	S Hook - 1/4" x 2¼"	0.1	0.03	

CHAIN DISK FEED SYSTEM
DROP OUTLETS & DOWNSPOUT TUBES

CATALOG #	ITEM DESCRIPTION	SHIP WEIGHT LBS.	SHIP WEIGHT KG.	LIST PRICE
780100	SURE-DROP Volume Drop With Mounting Hardware - 6.75lbs For Model 720 2.25" Systems & Chain Disk Systems	3.5	1.6	
780200	SURE-DROP End Control Drop With Mounting Hardware, Proximity Sensor, Switch Mount and Relay For Model 720 2.25" Fill Systems Only	10.1	4.6	
780220	D15 Volume Drop - 8.4- lbs. Fits on 720 and Chain Disk Tube. Mounting Clamps not Included	1.0	0.5	
720550	2.25"-2.36" All-Out Poly Drop With Shutoff; fits Model 720 2.25" Fill Systems and 60mm Chain Disk Systems	1.3	0.6	
780098	Five 7L Volume Drop (*Requires (2) 780097*)	3.5	1.6	
780099	Four 7L Volume Drop (*Requires (2) 780097*)	3.5	1.6	
780097	Nylon Cable Tie - 16" long x .3" Wide	1.0	0.5	
720555	Carton of (10) 720550 2.25"-2.36" All-Out Poly Drops	9.0	4.1	
730615	3" I.D. x 12' Translucent Plastic Downspout Tube; connect to 720550 with (1) 730485 and (1) 730201 for a snug fit or (1) 730201 for a looser fit	3.8	1.7	
730480	3" I.D. x 25' Flexible PVC Downspout Tube; connect to 720550 with (1) 730485 and (1) 730431 for a snug fit or (1) 730431 for a looser fit	14.8	6.7	
730289	3.2" I.D. x 12' Downspout Pipe; fits over 730615; connect with (1) 730201	4.0	1.8	
730201	Drop Tube Wire Clip	0.1	0.0	
730431	3" Stainless Steel Downspout Clamp	0.1	0.0	
730485	3" Downspout SurFit Adapter; connect to 720550 with (1) 730201	0.1	0.0	
730439	3" Downspout Sleeve Connector; connects to 730615/730480 with (1) 730201/730431	0.1	0.0	
730438	3" Downspout 45º Angle Sleeve Connector; connects to 730615/730480 with (1) 730201/730431	0.2	0.1	
730437	3" Downspout Y Fitting Sleeve Connector; connects to 730615/730480 with (1) 730201/730431	0.4	0.2	
780401	SURE-DROP 12# Manual Farrowing Tube Drop connects to 720550 All-Out Drop with (1) 730431 SS clamp (req'd)	4.3	2.0	

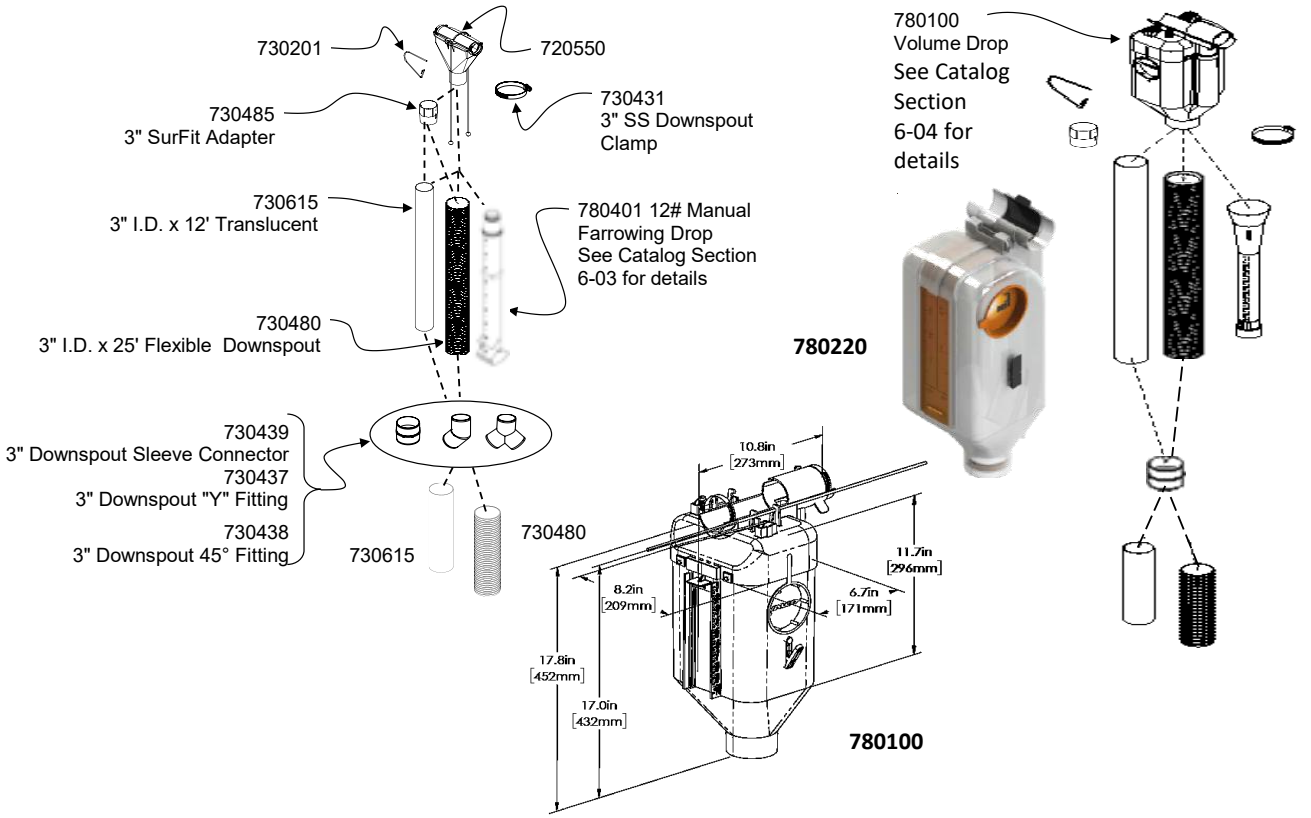

Toll-free: 1-800-99VALCO
Phone: (+1) 419-678-8731
Fax: (+1) 419-678-2200

CHAIN DISK FEED SYSTEM
CONTROLS, TIMERS & SENSORS

CONTROLS

CATALOG #	ITEM DESCRIPTION	SHIP WEIGHT LBS.	SHIP WEIGHT KG.	LIST PRICE
C805	Chain Disk Control (1 drive) 220V 1ph 50/60Hz, - Includes channel for actuator - 3 phase drive motor will need customer supplied starter	6.4	2.9	
C806	Chain Disk Auxiliary Control 220V 1ph 50/60Hz, - Up to 7 cascading chain disk loops - 3 phase drive motor will need customer supplied starter	6.5	2.9	

TIMERS

CATALOG #	ITEM DESCRIPTION	SHIP WEIGHT LBS.	SHIP WEIGHT KG.	LIST PRICE
700024	24 Hour Time Clock - 115V (Pin Type Settings)	3.0	1.4	
700025	24 Hour Time Clock - 230V (Pin Type Settings)	3.0	1.4	

780350
Clear PVC tube sold separate

730465

SENSORS

CATALOG #	ITEM DESCRIPTION	SHIP WEIGHT LBS.	SHIP WEIGHT KG.	LIST PRICE
780350	Tube Mounted 220V Proximity Sensor - Use on clear tube	1.7	0.8	
730549	Face Mounted 220V Proximity Sensor - Short Delay - 90-265v, 3 sec. - 10 min. Delay - Use on discharge head hoppers	0.4	0.2	
730465	Face Mounted 220V Proximity Sensor - Long Delay - 90-265v, 3 sec. - 60 min. Delay - Use on discharge head hoppers	0.9	0.4	

SECTION 06
VOLUME DROPS

IN THIS CATALOG SECTION

PAGE NUMBER	CONTENTS
06-02	How To Order A Volume Drop System
06-03	Volume Drops - End Control Drops - Farrowing Tube Drops
06-04 thru 06-06	Drop Tubes - Trip Kits - Winches - Trip Cable

SECTION 06
VOLUME DROPS

HOW TO ORDER A VOLUME DROP SYSTEM

1. Order Bulk Bin and Model 720 Flexible Auger Fill System or Chain Disk System from separate catalog sections. If using a flexible auger fill system, delete the discharge head from your fill system order.
2. Order one end control drop or proximity sensor per line.
3. Order the required number of volume drops.
4. Order downspout tube and other accessories if needed.
5. Order manual trip kit or winch and accessories as needed, including trip cable. If tripping by winch, be sure to order 1 - 750051 Winch Accessory Kit per winch.

Toll-free: 1-800-99VALCO
Phone: (+1) 419-678-8731
Fax: (+1) 419-678-2200

WWW.VAL-CO.COM

VOLUME DROPS

780200 SURE-DROP END CONTROL UNIT

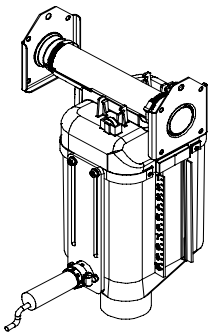

780100 SURE-DROP

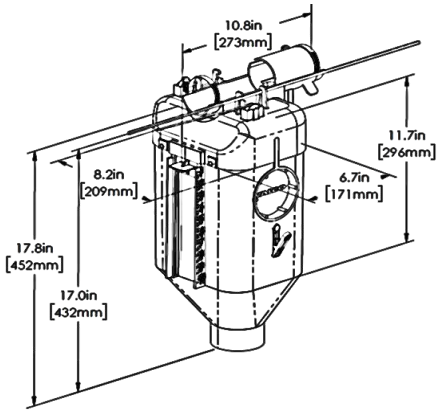

780099

780098

780220

VOLUME DROPS

CATALOG #	ITEM DESCRIPTION	SHIP WEIGHT LBS.	SHIP WEIGHT KG.	LIST PRICE
780100	SURE-DROP Volume Drop With Mounting Hardware - 6.75 lbs (for Model 720 2.25" Systems & Chain Disk Systems)	3.50	1.6	
780200	SURE-DROP End Control Drop With Mounting Hardware, Proximity Sensor, Switch Mount and Relay (for Model 720 2.25" Fill Systems Only)	10.07	4.6	
780220	D15 Volume Drop - 8.4 lbs. (Fits on 720 and Chain Disk Tube. Mounting Clamps not Included)	1.00	0.5	
780098	Four 7L Drop	3.50	1.6	
780099	Five 7L Drop	3.50	1.6	
780350	Tube Mounted 220V Proximity Sensor for Chain Disk Systems (for use on Clear Tube Only)	1.70	0.8	

**Max capacity of 50#, dependent on feed density*

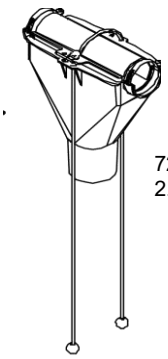

720550
2.25"-2.36" All-Out Drop

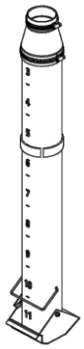

780401
SURE-DROP Farrowing Tube Drop

FARROWING TUBE DROP

CATALOG #	ITEM DESCRIPTION	SHIP WEIGHT LBS.	SHIP WEIGHT KG.	LIST PRICE
720550	2.25"-2.36" All-Out Poly Drop With Shutoff; fits Model 720 2.25" Fill Systems and 60mm Chain Disk Systems	1.30	0.59	
720555	Carton of (10) 720550 2.25"-2.36" All-Out Poly Drops	9.00	4.08	
780401	SURE-DROP 12# Manual Farrowing Tube Drop connects to 720550 All-Out Drop with (1) 730431 SS downspout clamp (req'd)	4.30	1.95	
780428	Feed Commander Infra-Red Feed Sensor for 780401 4" Farrowing Tube Drop	1.64	0.74	
730431	3" SS Downspout Clamp	0.10	0.05	

Toll-free: 1-800-99VALCO
Phone: (+1) 419-678-8731
Fax: (+1) 419-678-2200

VOLUME DROP DOWNSPOUT TUBES

DROP TUBES

CATALOG #	ITEM DESCRIPTION	SHIP WEIGHT LBS.	SHIP WEIGHT KG.	LIST PRICE
780500	12" to 20" Adj. Drop Tube Assy. Connects 780100 to G-stall drop tube	0.80	0.4	
730292	Coupler	0.10	0.0	
730431	3" Stainless Steel Downspout Clamp	0.10	0.0	
690291	TEK Screw #10-16 X 3/4	0.02	0.0	
730289	3.25" I.D. x 12' Downspout Pipe Fits over 730615; connect with (1) 730201	4.00	1.8	
730615	3" I.D. X 12' Long Downspout Pipe	3.76	1.7	
730449	3" I.D. X 18" pvc flexible tube	0.40	0.2	
730480	3" I.D. X 25' pvc flexible tube	14.80	6.7	
730201	Drop Tube Wire Clip	0.10	0.0	
730445	3.5" Stainless Steel Downspout Clamp	0.08	0.0	
730437	3" "Y" Fitting	0.40	0.2	
730438	3" 45 DEG. Fitting	0.20	0.1	
735439	3.5" Downspout Sleeve Connector; connects to 730437, 730438	0.10	0.0	

For more information on drop tube components see page 06-05

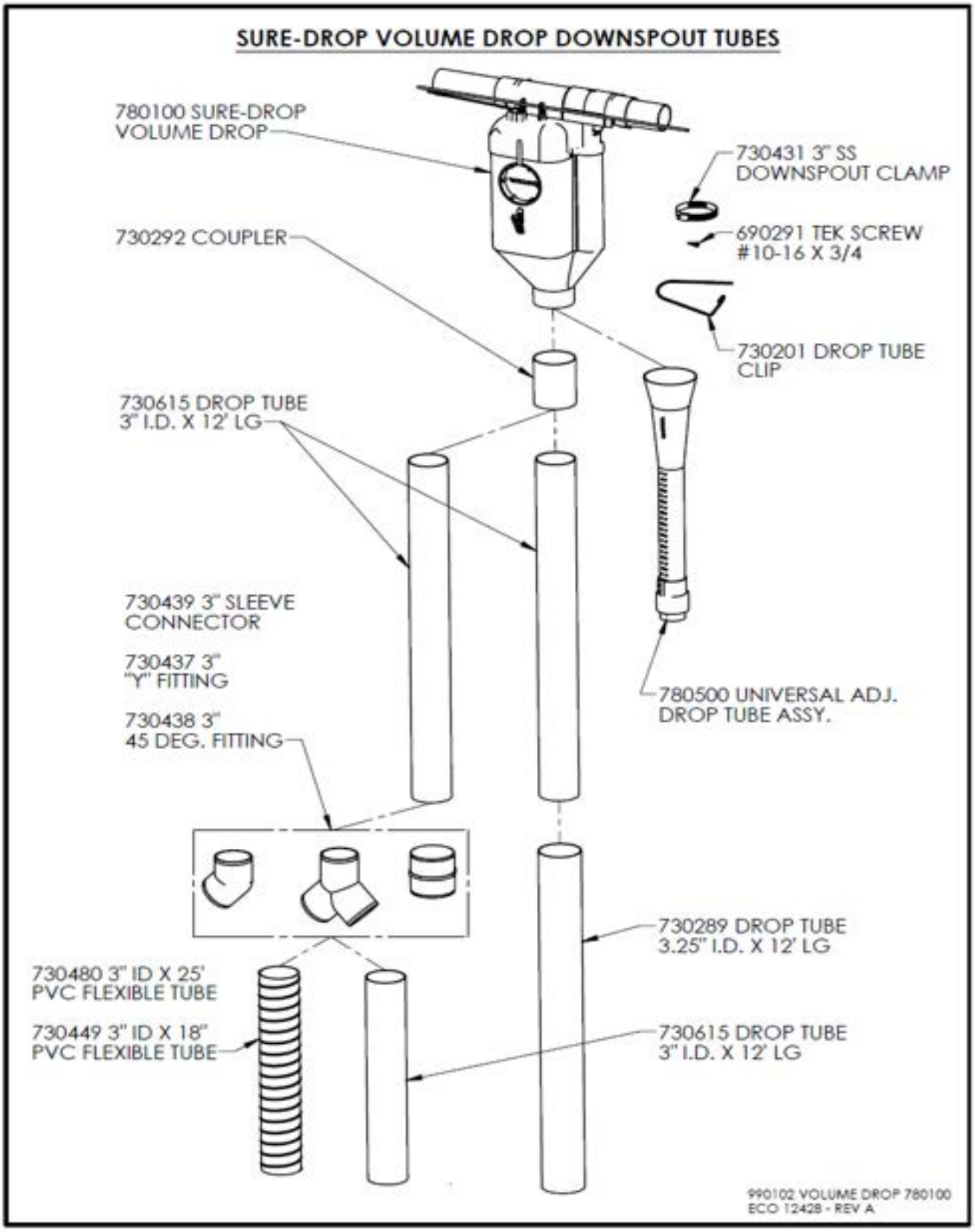
SURE-DROP VOLUME DROP DOWNSPOUT TUBES
780100 SURE-DROP VOLUME DROP
730431 3" SS DOWNSPOUT CLAMP
690291 TEK SCREW #10-16 X 3/4
730292 COUPLER
730201 DROP TUBE CLIP
730615 DROP TUBE 3" I.D. X 12' LG
730439 3" SLEEVE CONNECTOR
730437 3" "Y" FITTING
730438 3" 45 DEG. FITTING
780500 UNIVERSAL ADJ. DROP TUBE ASSY.
730289 DROP TUBE 3.25" I.D. X 12' LG
730480 3" ID X 25' PVC FLEXIBLE TUBE
730449 3" ID X 18" PVC FLEXIBLE TUBE
730615 DROP TUBE 3" I.D. X 12' LG
990102 VOLUME DROP 780100
ECO 12428 - REV A

MANUAL TRIP KIT & WINCHES

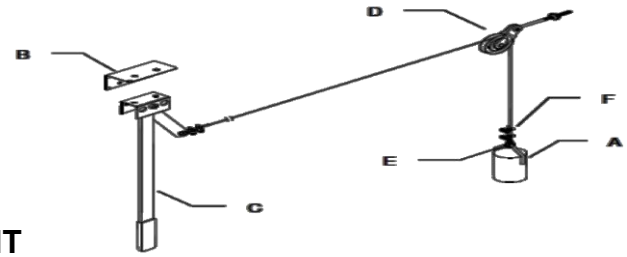

MANUAL TRIP KIT

CATALOG #	ITEM DESCRIPTION	SHIP WEIGHT LBS.	SHIP WEIGHT KG.	LIST PRICE
750027	Manual Trip Kit for Volume Drops - Includes Lever, Pulley, Mounting Brackets, Counterweight and Installation Hardware - 1/8" cable not included. *(Handles up to 30 drops)*	20.80	9.4	

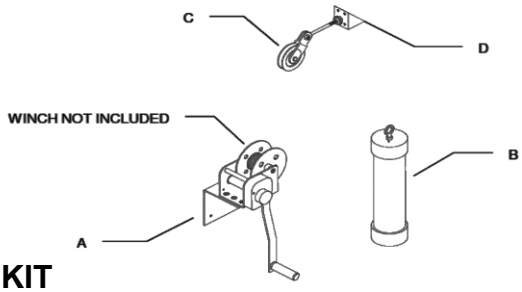

WINCH ACCESSORY KIT

CATALOG #	ITEM DESCRIPTION	SHIP WEIGHT LBS.	SHIP WEIGHT KG.	LIST PRICE
750051	Winch Accessory Kit With Pulleys, Mounting Brackets, Counterweight and Installation Hardware - For Volume Drops - Winch is NOT Included - Order Separately *(VB317 handles up to 150 drops, VB315 up to 110 drops)*	21.05	9.5	

For more winching accessories please see Section 19 of this catalogue

SECTION 07
SWINE EQUIPMENT

IN THIS CATALOG SECTION

Page Number	CONTENTS
07-01	Application Chart
07-02	Cup Waterers
07-02	Swinging Waterers
07-02	Accessories
07-03	T-Bolts

Application Chart

Part Number	Type of drinker	Pig Size (lb)	Pigs per bowl	Mounting height
RDWF-KIT-R	Cup, wean to finish	13-275	15-25	4-3/4" to cup bottom
RDNC-KIT-R	Cup, nursery	piglet	12 max	2" to cup bottom
781024	24" swinger pipe (need 2 drinkers)	13-275	20-30 per swinger	1"-3" off pig's back
781036	36" swinger pipe (need 2 drinkers)	13-275	20-30 per swinger	1"-3" off pig's back
781008	Bite drinker (2 per swinger pipe)	13-275	10-15 per drinker	NA

Notes:

Do not use these products on hogs with nose rings.

Do not mount cups on the ends of pen walls, outside corners, or other exposed areas.

Toll-free: 1-800-99VALCO
Phone: (+1) 419-678-8731
Fax: (+1) 419-678-2200

www.val-co.com

SWINE WATERERS

CUP WATERING

CATALOG #	ITEM DESCRIPTION	SHIP WEIGHT LBS.	SHIP WEIGHT KG.	LIST PRICE
RDWF-KIT-R	KIT, SLAT T-BOLT, 6" LG X 3/8" - Full Thread	0.0	0.0	
RDNC-KIT-R	Nursery Cup Kit (Includes Cup, Pipe, Nipple w/ Rubber Spring, & SS HRDW)	0.0	0.0	
RDWFN-BP	Cup Mounting Plate - for single cup installations - SS	0.0	0.0	
RDWCP-KIT	Drinker Cup Plumbing Kit	0.0	0.0	
781000	Wean/Finish Cup Only - SS	0.6	0.3	
781001	Nursery Cup Only - SS	0.0	0.0	
RDSS48PAD	48" SS Pipe with Off-Set - Wean to Finish	0.0	0.0	
RDSS36P	36" SS Pipe with Off-Set - Nursery	0.0	0.0	
RDZP-GB1	Top Gate Bracket SS with Clamp - Wean-to-Finish	0.1	0.0	
RDZP-N-GB1	Top Gate Bracket SS with Clamp - Nursery	0.0	0.0	
781006	Cup nipple, rubber spring	2.0	0.9	

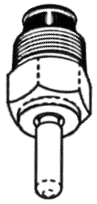

781006

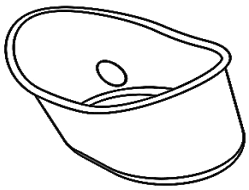

781000/781001

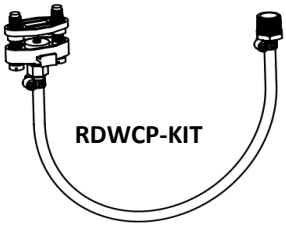

RDWCP-KIT

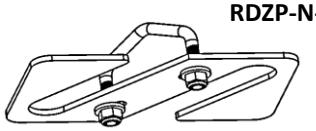

RDZP-GB1
RDZP-N-GD1

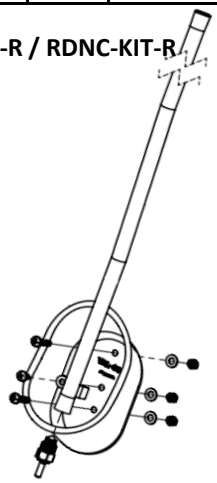

RDWF-KIT-R / RDNC-KIT-R

SWINGING WATERING

781008	Swine Bite Drinker, Rubber Spring	0.0	0.0	
781024	24" Long Flat Y SS Swinger	0.0	0.0	
781036	36" Long Flat Y SS Swinger	1.7	0.8	

781008

781024 24"
781036 36"

ACCESSORIES

820341	Dosatron Medicator Kit (D25RE5)	0.1	0.0	
VM507	Hook-Up Kit for Dosatron Medicator	1.1	0.5	

Toll-free: 1-800-99VALCO
Phone: (+1) 419-678-8731
Fax: (+1) 419-678-2200

www.val-co.com

T-BOLTS

T-Bolts

CATALOG #	ITEM DESCRIPTION	SHIP WEIGHT LBS.	SHIP WEIGHT KG.	LIST PRICE
690481-Q50	Kit, Slat T-Bolt, 6" LG x 3/8" - Full Thread - Quantity of 50	52.5	23.8	
690461-Q40	Kit, Slat T-Bolt, 7" LG x 1/2" - Full Thread - Quantity of 40	0.0	0.0	
690465-Q1500	Kit, Slat T-Bolt, 6" LG x 1/2" - Full Thread - Bulk Pack	1.7	0.7	

690461-Q40

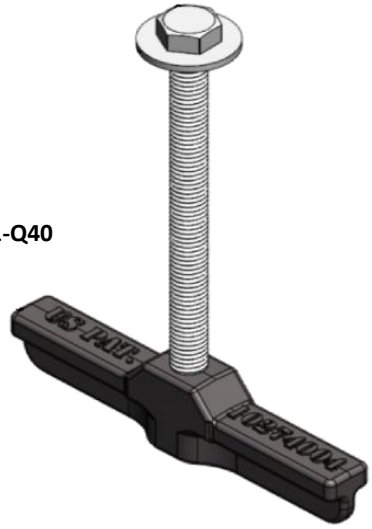

Blank

Toll-free: 1-800-99VALCO
Phone: (+1) 419-678-8731
Fax: (+1) 419-678-2200

SECTION 09
CENTER BELT NESTS

IN THIS CATALOG SECTION

PAGE NUMBER	CONTENTS
09-02	How To Order A Center Belt Mechanical Nest & Egg Collection System
09-03 thru 09-04	System Component Pricing
09-05	Sample System Requirements

REPAIRS

SEE REPAIR LISTING IN SEPARATE CATALOG

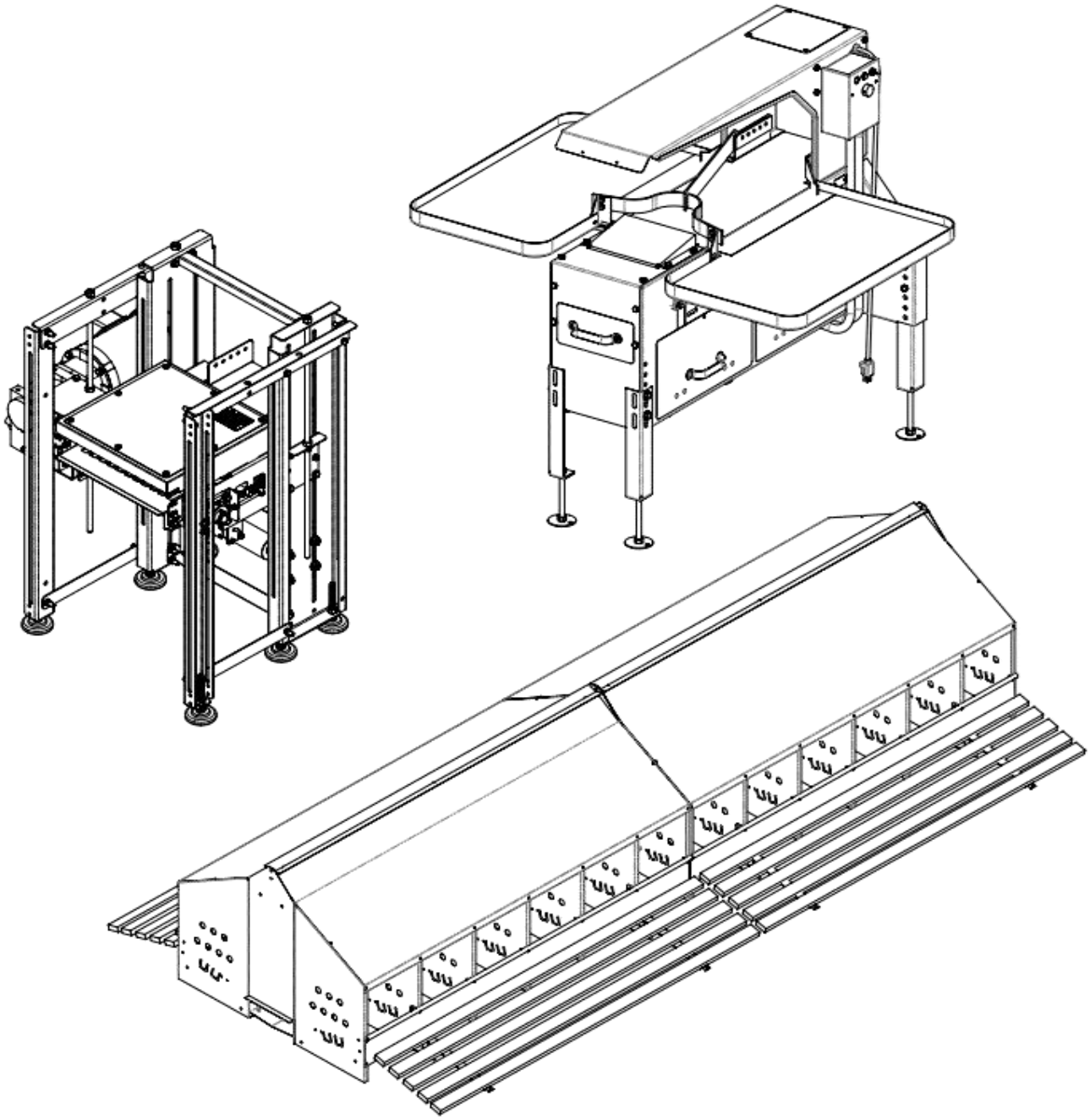

CENTER BELT NESTS

HOW TO ORDER A
CENTER BELT MECHANICAL NEST & EGG COLLECTION SYSTEM

1. Select one collection table for each nest row based on electric requirements and overall nest row length.
2. Select one collection tray (right-left-dual) for each collection table.
3. Select one 413180 Dual Roller End Return for each collection table.
4. Determine the correct quantity of 413000 Nests needed based on nests per station and connector length.
5. Select one Nest Pad set for each nest.
6. Determine the quantity and select the roll length of cloth or perforated polypropylene 8” egg belt needed.
7. Select one 410185 Glue Kit per two rows of nests when using cloth egg belt.
8. Select one 410127 Sewing Kit for per two rows of nests when using cloth egg belt.
9. When polypropylene egg belt is used, select two 413552 Splicing Strapping for each nest row.
10. When using polypropylene egg belt, select one 412539 Egg Belt Take Up Tensioner Kit for each collection table.
11. Determine the length required for each nest-to-table connector, then select one connector trough & cover unit for each collection table.
12. Determine the length of nest-to-nest connector needed based on the crossover space required and/or nest row length, then select the quantity of connector trough & cover units required.

WOOD PERCH OPTION

1. Select one 413060 Perch Arm Set for each nest.
2. Select one 413065 Perch Board Set for each nest.

PLASTIC PERCH OPTION

1. Select one 410618 Plastic Perch Kit for each nest.

Toll-free: 1-800-99VALCO
Phone: (+1) 419-678-8731
Fax: (+1) 419-678-2200

CENTER BELT MECHANICAL NEST & EGG COLLECTION

Nest

		SHIP WEIGHT		LIST PRICE
413000	Basic 12 Hole Mechanical Nest (Wide Style) With Wire Nest Bottoms - Nest Pads Not Included - select & order below - Perch Arms and/or Perch Boards or Plastic Perch Kits Are Optional - if needed select & order from page 09-04	84.6	38.4	

COLLECTION TABLES

CATALOG #	ITEM DESCRIPTION	SHIP WEIGHT LBS.	SHIP WEIGHT KG.	LIST PRICE
413461	1hp 8" Egg Belt Drive 230v	168.5	76.4	
414060	Egg Collection Table	36.5	16.6	
425028	Right Side Collection Tray	26.0	11.8	
425029	Left Side Collection Tray	26.4	12.0	
425030	Dual Side Collection Tray	49.3	22.4	
413539	Polypropylene Slack Belt Tension / Take Up Kit (Used only for Polypropylene egg collection belts)	111.0	50.3	

FAR END RETURN ASSY

		SHIP WEIGHT		LIST PRICE
413180	Dual Roller End Return Assembly	20.1	9.1	

8" EGG BELT-Polypropylene

		SHIP WEIGHT		LIST PRICE
413551-0820	8" polypropylene egg belt - 820' Roll	97.8	44.3	
413551-1020	8" polypropylene egg belt - 1020' Roll	130.0	59.0	
413551-1220	8" polypropylene egg belt - 1220' Roll	117.0	53.1	

8" EGG BELT-Cloth

		SHIP WEIGHT		LIST PRICE
413450-0820	8" Egg Belt - 820' Roll	80.0	36.3	
413450-1020	8" Egg Belt - 1020' Roll	106.0	48.1	
413450-1220	8" Egg Belt - 1220' Roll	113.0	51.3	
413550	8" Egg Belt - 1220' Roll (Tan color)	1,150.0	521.6	

EGG BELT ACCESSORIES

		SHIP WEIGHT		LIST PRICE
413552	Splicing Strapping for polypropylene egg belt	0.0	0.0	
410185	Glue Kit for Egg Belt (includes 1 - #410186 Hot Glue Gun and 6 - #410187 Hot Glue Sticks)	1.2	0.5	
410127	Sewing Kit for Egg Belt (includes 1 - #410940 3" Belt Needle & 1 - #410941 81' Spool Wax Thread)	0.1	0.0	

NEST PADS

		SHIP WEIGHT		LIST PRICE
413069	Val-Co Nest Turf Pads, Grey, for 41300 Nest, 12" x 13"	0.4	0.2	
413081	Val-Co Nest Turf Pads, Grey, for 41300 Nest, 12" x 13" *Set includes 12 - 413069 Pads*	6.3	2.9	
413253	NXT turf pad, Grey, for 41300 Nest, 11.75" x 12.875"	0.5	0.2	
413254	NXT turf pad, Grey, for 41300 Nest, 11.75" x 12.875" *set includes 12 - 413253 pads*	6.0	2.7	
413253-Q100	NXT turf pad, Grey, for 41300 Nest, 11.75" x 12.875" *Full Box of 100 - 413253 Pads*	54.0	24.5	
413015	Original Nest Pads, Grey, for 41300 Nest, 11.75" x 12.875"	0.6	0.3	
413055	Original Nest Pads, Grey, for 41300 Nest, 11.75" x 12.875" *Set includes 12 - 413015 Pads*	6.6	3.0	

CENTER BELT MECHANICAL NEST & EGG COLLECTION

PERCH OPTIONS

CATALOG #	ITEM DESCRIPTION	SHIP WEIGHT LBS.	SHIP WEIGHT KG.	LIST PRICE
413060	Set of Galvanized Perch Arms for Nest *Each set includes the following:* *- 410631 Perch Arm (4)* *- 410630 Arm Support (4)* *- 413019 Hardware Bag (1)*	5.3	2.4	
413065	Set of Perch Boards for Nest *Each set includes the following:* *- 410632 Perch Board (10)*	17.1	7.8	
410618	Optional Plastic Perch Kit With Mounting Hardware *Each set includes 4 perch ramps with 12 mounting brackets*	6.5	2.9	

NEST-TO-TABLE CONNECTOR TROUGHS & COVERS

		SHIP WEIGHT		LISTPRICE
410799	72" Nest-to-Table Connector Trough & Cover *(410778 Trough + 410779 Cover + 2 - 410759 Belt Guides)*	17.3	7.8	
410832	96" Nest-to-Table Connector Trough & Cover *(410833 Trough + 410825 Cover + 2 - 410759 Belt Guides)*	21.4	9.7	

NEST-TO-NEST CONNECTOR TROUGHS & COVERS

		SHIP WEIGHT		LISTPRICE
413091	12" Nest-to-Nest Connector Trough With Cover *(413092 Trough + 413093 Cover)*	4.7	2.1	
410943	18" Nest-to-Nest Connector Trough With Cover *(410938 Trough + 410939 Cover)*	4.1	1.9	
410796	24" Nest-to-Nest Connector Trough With Cover *(410761 Trough + 410763 Cover + 410759 Belt Guide)*	5.8	2.6	
410627	28" Nest-to-Nest Connector Trough With Cover *(410628 Trough + 410629 Cover + 410759 Belt Guide)*	6.9	3.1	
410797	30" Nest-to-Nest Connector Trough With Cover *(410792 Trough + 410793 Cover + 410759 Belt Guide)*	7.2	3.3	
410798	36" Nest-to-Nest Connector Trough With Cover *(410794 Trough + 410795 Cover + 410759 Belt Guide)*	8.6	3.9	
410878	42" Nest-to-Nest Connector Trough With Cover *(410876 Trough + 410877 Cover+ 410759 Belt Guide)*	10.8	4.9	
410883	48" Nest-to-Nest Connector Trough With Cover *(410881 Trough + 410882 Cover + 410759 Belt Guide)*	11.6	5.3	
410886	54" Nest-to-Nest Connector Trough With Cover *(410884 Trough + 410885 Cover + 2 - 410759 Belt Guides)*	13.0	5.9	
410859	60" Nest-to-Nest Connector Trough With Cover *(410860 Trough + 410861 Cover + 2 - 410759 Belt Guides)*	14.5	6.6	
410880	72" Nest-to-Nest Connector Trough With Cover *(410879 Trough + 410779 Cover + 2 - 410759 Belt Guides)*	17.3	7.8	
410823	96" Nest-to-Nest Connector Trough With Cover *(410824 Trough + 410825 Cover + 3 - 410759 Belt Guides)*	23.1	10.5	

Toll-free: 1-800-99VALCO
Phone: (+1) 419-678-8731
Fax: (+1) 419-678-2200

CENTER BELT MECHANICAL NEST & EGG COLLECTION SYSTEM

SYSTEM REQUIREMENTS

2 Nest Rows

CATALOG NUMBER	ITEM DESCRIPTION		LENGTH OF SLATS (FT)																	
			175	200	225	250	275	300	325	350	375	400	425	450	475	500	525	550	575	600
CHOOSE	.50 HP Collection Table		2	2	2	2	2	2	2	2	2	2	2	2	2	0	0	0	0	0
CHOOSE	.75 HP Collection Table		0	0	0	0	0	0	0	0	0	0	0	0	0	2	2	2	2	2
425028 425029 425030	Right Side Collection Tray Left Side Collection Tray Dual Side Collection Tray		Select - 2 Required (1 Per Table)																	
413180	Dual Roller End Return Assy		2	2	2	2	2	2	2	2	2	2	2	2	2	2	2	2	2	2
Order By Full Roll	8" Egg Belt (total feet)		700	800	900	1000	1100	1200	1300	1400	1500	1600	1700	1800	1900	2000	2100	2200	2300	2400
Refer to pg. 3	Pad Options on pg. 3		Select - 1 Set Required Per Nest																	
413060	Set of Perch Arms		Optional - 1 Set Required Per Nest																	
413065	Set of Perch Boards		Optional - 1 Set Required Per Nest																	
410618	Plastic Perch Kit		Optional - 1 Kit Required Per Nest																	
410799 - or - 410832	72" N-T Connector W/Cover - or - 96" N-T Connector W/Cover		Select - 2 Required (1 Per Nest Row)																	
413000	12 Hole Nest	2 Nest Row 18" Connector	56	68	76	84	92	100	108	120	128	136	144	152	160	172	180	188	196	204
410943	18" N-N Connector W/Cover		26	32	36	40	44	48	52	58	62	66	70	74	78	84	88	92	96	100
Number of Birds @ 5.5 Per Nest Hole			3,696	4,488	5,016	5,544	6,072	6,600	7,128	7,920	8,448	8,976	9,504	10,032	10,560	11,352	11,880	12,408	12,936	13,464
413000	12 Hole Nest	2 Nest Row 24" Connector	56	64	72	80	88	96	104	112	120	132	140	148	156	164	172	180	188	196
410796	24" N-N Connector W/Cover		26	30	34	38	42	46	50	54	58	64	68	72	76	80	84	88	92	96
Number of Birds @ 5.5 Per Nest Hole			3,696	4,224	4,752	5,280	5,808	6,336	6,864	7,392	7,920	8,712	9,240	9,768	10,296	10,824	11,352	11,880	12,408	12,936
413000	12 Hole Nest	2 Nest Row 28" Connector	52	60	68	76	84	96	104	112	120	128	136	144	152	160	168	176	184	192
410627	28" N-N Connector W/Cover		24	28	32	36	40	46	50	54	58	62	66	70	74	78	82	86	90	94
Number of Birds @ 5.5 Per Nest Hole			3,432	3,960	4,488	5,016	5,544	6,336	6,864	7,392	7,920	8,448	8,976	9,504	10,032	10,560	11,088	11,616	12,144	12,672
413000	12 Hole Nest	2 Nest Row 30" Connector	52	60	68	76	84	92	100	108	116	124	132	140	148	156	164	172	180	188
410797	30" N-N Connector W/Cover		24	28	32	36	40	44	48	52	56	60	64	68	72	76	80	84	88	92
Number of Birds @ 5.5 Per Nest Hole			3,432	3,960	4,488	5,016	5,544	6,072	6,600	7,128	7,656	8,184	8,712	9,240	9,768	10,296	10,824	11,352	11,880	12,408
413000	12 Hole Nest	2 Nest Row 36" Connector	52	60	68	72	80	88	96	104	112	120	128	136	144	152	160	168	172	180
410798	36" N-N Connector W/Cover		24	28	32	34	38	42	46	50	54	58	62	66	70	74	78	82	84	88
Number of Birds @ 5.5 Per Nest Hole			3,432	3,960	4,488	4,752	5,280	5,808	6,336	6,864	7,392	7,920	8,448	8,976	9,504	10,032	10,560	11,088	11,352	11,880
413000	12 Hole Nest	2 Nest Row 42" Connector	48	56	64	72	80	84	92	100	108	116	124	132	136	144	152	160	168	176
410878	42" N-N Connector W/Cover		22	26	30	34	38	40	44	48	52	56	60	64	66	70	74	78	82	86
Number of Birds @ 5.5 Per Nest Hole			3,168	3,696	4,224	4,752	5,280	5,544	6,072	6,600	7,128	7,656	8,184	8,712	8,976	9,504	10,032	10,560	11,088	11,616
413000	12 Hole Nest	2 Nest Row 48" Connector	48	56	60	68	76	84	92	96	104	112	120	124	132	140	148	156	160	168
410883	48" N-N Connector W/Cover		22	26	28	32	36	40	44	46	50	54	58	60	64	68	72	76	78	82
Number of Birds @ 5.5 Per Nest Hole			3,168	3,696	3,960	4,488	5,016	5,544	6,072	6,336	6,864	7,392	7,920	8,184	8,712	9,240	9,768	10,296	10,560	11,088
413000	12 Hole Nest	2 Nest Row 54" Connector	44	52	60	68	72	80	88	92	100	108	116	120	128	136	144	148	156	164
410886	54" N-N Connector W/Cover		20	24	28	32	34	38	42	44	48	52	56	58	62	66	70	72	76	80
Number of Birds @ 5.5 Per Nest Hole			2,904	3,432	3,960	4,488	4,752	5,280	5,808	6,072	6,600	7,128	7,656	7,920	8,448	8,976	9,504	9,768	10,296	10,824
413000	12 Hole Nest	2 Nest Row 60" Connector	44	52	56	64	72	76	84	92	96	104	112	116	124	132	136	144	152	156
410859	60" N-N Connector W/Cover		20	24	26	30	34	36	40	44	46	50	54	56	60	64	66	70	74	76
Number of Birds @ 5.5 Per Nest Hole			2,904	3,432	3,696	4,224	4,752	5,016	5,544	6,072	6,336	6,864	7,392	7,656	8,184	8,712	8,976	9,504	10,032	10,296

This page left intentionally blank

Toll-free: 1-800-99VALCO
Phone: (+1) 419-678-8731
Fax: (+1) 419-678-2200

SECTION 10
5" WIDE BELT, SIDE BELT

IN THIS CATALOG SECTION

PAGE NUMBER	CONTENTS
10-02	How To Order A 5" Wide Side Belt Mechanical Nest & Egg Collection System
10-03	Collection Tables - End Return - 5" Egg Belt
10-04	5" Wide Side Belt Nests
10-05	Connector Trough & Cover Assemblies for 5" Wide Side Belt Nests
10-06	Collection Table Diagrams

5" WIDE BELT, SIDE BELT

HOW TO ORDER A
5" WIDE SIDE BELT MECHANICAL NEST & EGG COLLECTION SYSTEM

1. Select one collection table for each nest row based on electrical requirement, height requirement and if used with cross conveyor or not.
2. Select one 417008 Dual Roller End Return for each collection table.
3. Select the nest required (10 hole or 20 hole) and determine the correct quantity needed based on nests per station and connector length.
4. Select one Nest Pad set for each nest.
5. Determine the quantity and select the roll length of cloth or perforated polypropylene 5” egg belt needed.
6. Select one 410185 Glue Kit per two rows of nests when using cloth egg belt.
7. Select one 410127 Sewing Kit for per two rows of nests when using cloth egg belt.
8. When polypropylene egg belt is used, select two 413552 Splicing Strapping for each nest row.
9. When using polypropylene egg belt, select one 417105 Egg Belt Take Up Tensioner Kit for each collection table.
10. Determine the length required for each nest-to-table connector, then select two connector trough & cover units for each collection table.
11. Determine the nest-to-nest connector needed based on the crossover space required and/or nest row length, then select the quantity of connector trough & cover units required.

OPTIONS

1. Select one 412268 Egg Deflector Kit for each nest; if not supplied locally, include two 412276 PVC pipes per kit.
2. Select one 412267 Nest Lid Opening/Closing Kit per nest.

Toll-free: 1-800-99VALCO
Phone: (+1) 419-678-8731
Fax: (+1) 419-678-2200

5" WIDE BELT, SIDE BELT MECHANICAL NEST & EGG COLLECTION

COLLECTION TABLES

CATALOG #	ITEM DESCRIPTION	SHIP WEIGHT LBS.	SHIP WEIGHT KG.	LIST PRICE
417004	3/4 hp Collection Table - 230V, 1P, Standard Legs	273.0	123.8	
417005	3/4 hp Collection Table - 230V, 1P, XH Legs (adds up to 10"/25.4cm)	377.0	171.0	
417105	Polypropylene egg belt take up tensioner kit **(required collection table addition for use with polypropylene egg belts)**	191.0	86.6	
417006	3/4 hp Collection Table - 230V, For direct egg transfer to cross conveyor	248.0	112.5	
417200	3/4 hp Compact Collection Table - 230V, For direct egg transfer to cross conveyor	313.0	142.0	
417007	3/4 hp Collection Table - 230V, For direct egg transfer to cross conveyor, Includes XH Legs (adds up to 10" / 25.4cm)	347.0	157.4	
417083	5" Egg Belt wide Drive Transfer Assembly (Quantity 2) *(1) 417083 For use with cross conveyor collection tables 417006 & 417007*	5.8	2.6	

FAR END RETURN ASSY

.	ITEM DESCRIPTION	SHIP WEIGHT LBS.	SHIP WEIGHT KG.	LIST PRICE
417008	Dual Roller End Return Assembly	28.4	12.9	

CLOTH 5" EGG BELT

CATALOG #	ITEM DESCRIPTION	SHIP WEIGHT LBS.	SHIP WEIGHT KG.	LIST PRICE
417077-1020	5" Egg Belt - 1020' Roll	51.0	23.1	
417077-1220	5" Egg Belt - 1220' Roll	61.0	27.7	

PERFORATED POLYPROPYLENE 5" EGG BELT

CATALOG #	ITEM DESCRIPTION	SHIP WEIGHT LBS.	SHIP WEIGHT KG.	LIST PRICE
417078-0820	5" Perforated Polypropylene Egg Belt - 820' Roll	74.0	33.6	
417078-1020	5" Perforated Polypropylene Egg Belt - 1020' Roll	92.0	41.7	
417078-1220	5" Perforated Polypropylene Egg Belt - 1220' Roll	110.0	18.1	

EGG BELT ACCESSORIES

CATALOG #	ITEM DESCRIPTION	SHIP WEIGHT LBS.	SHIP WEIGHT KG.	LIST PRICE
410185	Glue Kit for Cloth Egg Belt (Includes 1 - #410186 Hot Glue Gun and 6 - #410187 Hot Glue Sticks)	1.2	0.5	
413552	Splicing Strapping for polypropylene egg belt	0.0	0.9	
410127	Sewing Kit for both Cloth (Includes 1 - #410940 3" Belt Needle & 1 - #410941 81' Spool Wax Thread)	0.1	0.0	

Toll-free: 1-800-99VALCO
Phone: (+1) 419-678-8731
Fax: (+1) 419-678-2200

5" WIDE BELT, SIDE BELT MECHANICAL NEST & EGG COLLECTION

8' - 20 HOLE MECHANICAL NEST, NEST PADS, ACCESSORIES

CATALOG #	ITEM DESCRIPTION	SHIP WEIGHT LBS.	SHIP WEIGHT KG.	LIST PRICE
417000	8' Long Side Belt Nest (5" Belt) - 20 Holes - Closeable Top *(10 - 9.5" Holes Per Side; order pads separately)*	103.0	46.7	
417081	NXT Pad, Grey, 9.6" x 12.1"	0.4	0.2	
417082	NXT Pad, Grey, set for 417000 Nest, 9.6" x 12.1" *Set includes 20 - 417081 NXT Pads*	17.8	8.1	
412267	Nest Lid opening/closing kit. For use with the 417000 and 417001 8' side belt nests. (1 kit required per nest. D*oes not include required additional winching system components*)	0.6	0.3	
412268	Egg Deflector Kit, Package of 8 Brackets (1 kit per nest section. *PVC pipe, 1 1/4" (31.75mm) schedule 40 not included.*	1.8	0.8	

8' - 10 HOLE COMFORT NEST AND NEST PAD

417001	8' Side Belt Nest (5" Belt) - 10 Holes - Comfort Nest *(5- 19" Holes Per Side; order pads separately)*	112.0	50.8	
412479	NXT Pad, Grey, for 417001 Nest, 12.1 x 18.9	0.8	0.3	
412494	NXT Pad, Grey, Set for 417001 Nest, 12.1 x 18.9 Set includes 10 - 412479 NXT Pads	17.6	8.0	
412267	Nest Lid opening/closing kit. For use with the 417000 & 417001 8' side belt nests. (1 kit required per nest. D*oes not include required additional winching system components*)	0.6	0.3	
412268	Egg Deflector Kit, Package of 8 Brackets (1 kit per nest section. *PVC pipe, 1 1/4" (31.75mm) schedule 40 not included.*	1.8	0.8	

5" WIDE BELT, SIDE BELT
MECHANICAL NEST & EGG COLLECTION

TROUGH CONNECTORS FOR SIDE BELT NESTS

CATALOG #	ITEM DESCRIPTION	SHIP WEIGHT LBS.	SHIP WEIGHT KG.	LIST PRICE
417121	18" Connector Trough & Cover Assembly *(417066 Trough + 417071 Cover)*	3.0	1.4	
417122	24" Connector Trough & Cover Assembly *(417067 Trough + 417072 Cover)*	4.0	1.8	
417123	28.75" Connector Trough & Cover Assembly *(417068 Trough + 417073 Cover)*	4.8	2.2	
417124	36" Connector Trough & Cover Assembly *(417069 Trough + 417074 Cover)*	6.0	2.7	
417125	48" Connector Trough & Cover Assembly *(417070 Trough + 417075 Cover)*	7.9	3.6	
417126	96" Connector Trough & Hinged Cover Assembly *(417012 Trough + 417076 Hinged Cover)*	16.4	7.4	

Used for both nest-to-table and nest-to-nest.

Toll-free: 1-800-99VALCO
Phone: (+1) 419-678-8731
Fax: (+1) 419-678-2200

5" WIDE SIDE BELT COLLECTION TABLE HEIGHTS

REGULAR HEIGHT TABLE

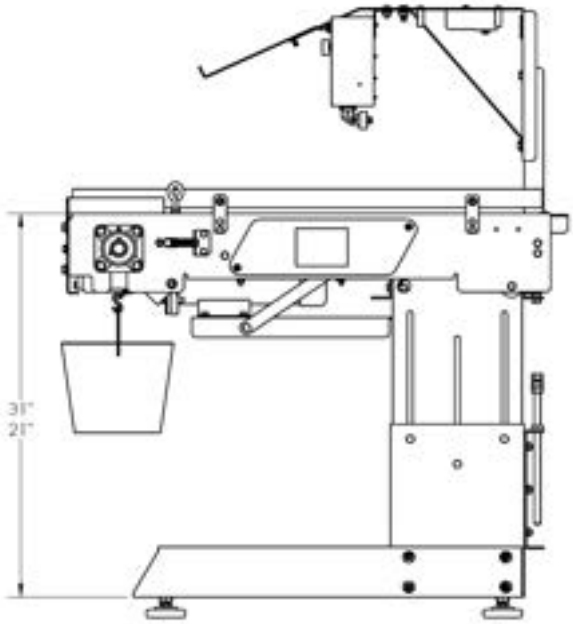

EXTRA HEIGHT TABLE

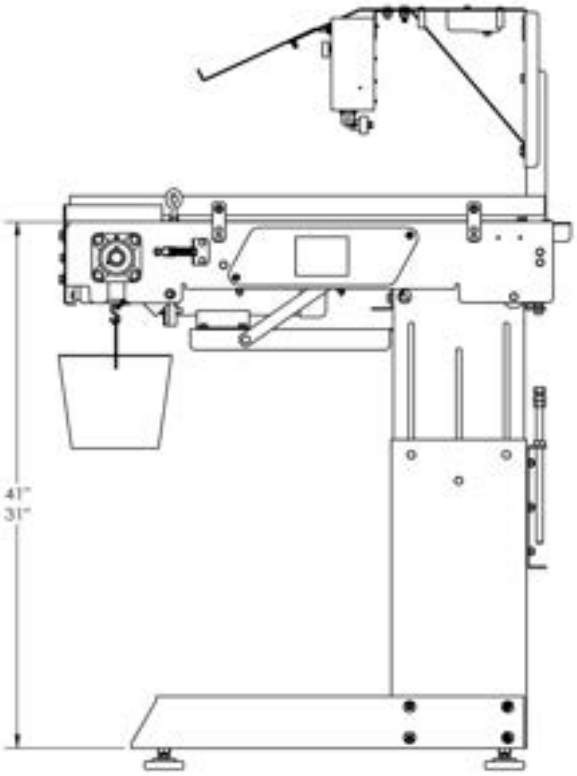

SECTION 11
COMMUNITY NESTS

IN THIS CATALOG SECTION

PAGE NUMBER	CONTENTS

Contact Application Engineering for your personlized Quote

Quote@val-co.com

This page left intentionally blank

Toll-free: 1-800-99VALCO
Phone: (+1) 419-678-8731
Fax: (+1) 419-678-2200

SECTION 12
CONVENTIONAL NESTS

IN THIS CATALOG SECTION

PAGE NUMBER	CONTENTS
12-02	10 Hole & 12 Hole Conventional Nests - Nest Racks

REPAIRS

SEE REPAIR LISTING IN SEPARATE CATALOG

Toll-free: 1-800-99VALCO
Phone: (+1) 419-678-8731
Fax: (+1) 419-678-2200

CONVENTIONAL NESTS

10-HOLE NESTS

CATALOG #	ITEM DESCRIPTION	SHIP WEIGHT LBS.	SHIP WEIGHT KG.	LIST PRICE
411000	10 Hole Conventional Nest - 50-60 Birds per nest, 12" hole width, Overall length 60"	46.0	20.9	
411000-Q3	10 Hole Conventional Nest - package of 3	138.0	62.6	
413252	Optional Anti-Roost Reel Kit	9.0	4.08	

Shipping weight shown is per nest - see packaging notes below.

12-HOLE NESTS

CATALOG #	ITEM DESCRIPTION	SHIP WEIGHT LBS.	SHIP WEIGHT KG.	LIST PRICE
411001	12 Hole Conventional Nest - 60-72 Birds per nest, 10" hole width, Overall length 60"	49.5	22.5	
411001-Q3	12 Hole Conventional Nest - Package of 3	148.0	67.1	
413252	Optional Anti-Roost Reel Kit	9.0	4.08	

Shipping weight shown is per nest - see packaging notes below.

NEST RACK

CATALOG #	ITEM DESCRIPTION	SHIP WEIGHT LBS.	SHIP WEIGHT KG.	LIST PRICE
411004	Nest Rack - 2 Support Legs - Includes Anti-Roost Assembly	24.0	10.89	

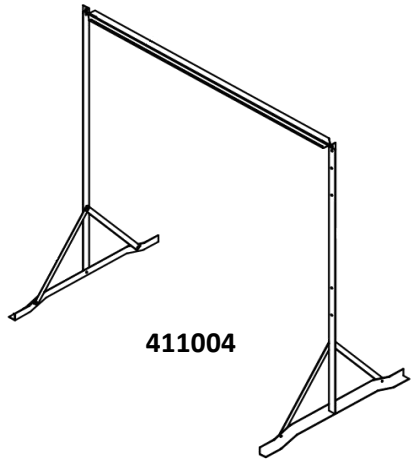

411004

411001

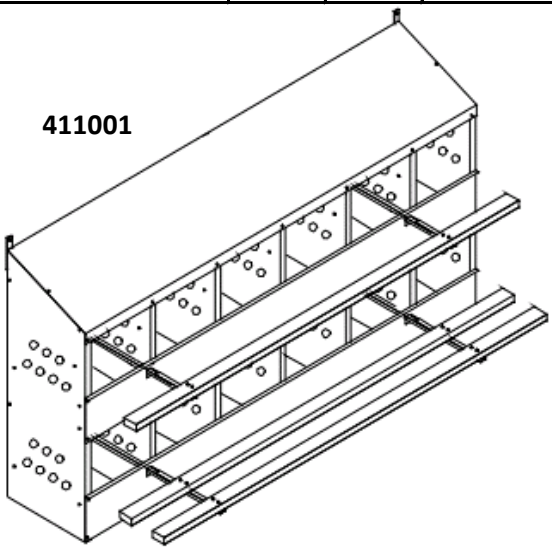

Toll-free: 1-800-99VALCO
Phone: (+1) 419-678-8731
Fax: (+1) 419-678-2200

SECTION 13
POULTRY FLOORING

IN THIS CATALOG SECTION

PAGE NUMBER	CONTENTS
13-02	Grid/Frame Style Poultry Flooring
13-03 thru 13-04	Rail Support Type - Winchable & Non-winchable
13-05	Wood Support Type with Val-Co Slats
13-06	Installation Instructions for all Poultry Flooring

Warning!

Poultry flooring is designed to support the weight of chickens. Workers should walk only on supported areas of the flooring.

Toll-free: 1-800-99VALCO
Phone: (+1) 419-678-8731
Fax: (+1) 419-678-2200

POULTRY FLOORING
GRID/FRAME STYLE

HOW TO ORDER SUPPORT FRAMES - 6' x 9', 6' x 12' and 6' x 14'

- To determine quantity of support frames required:
- Divide (total length of slats less 6') needed by 8 (6' wide frame + 2' gap between frames; less 6' because End Assembly has no slats for a gap) to determine number of frames needed, add (1) End Assembly per row
- For example, a 400' length of slats would require 50 support frames (400 divided by 8 = 50). 49 Interior and 1 End of Row Frame plus slats from last rail to a wall ledge or add a Lattice Kit(s).
- The special End of Row Section with Slat Angles holds slats at both ends where there is no adjacent slat and comes with 1 - 33" angle per 3' of rail/slat with 3 screws or 1 - 22" angle per 2' of rail/slat with 2 screws.

Note: This kit has 6' not 8' of slats.

ORDER EXAMPLE

Here is a sample order list for a house with 2 slat areas, each 14' wide x 398' long: (Remember to order extra slats for End Section to wall ledge if 400' or Lattice Kits if accessible to hens.)

98 - 6' x 14' Support Frame Interior Assembly with 4 wall mounting brackets per frame

2 - 6' x 14' Support Frame End Assembly with 4 wall mounting brackets, 8 Angle Supports@33", and 2 Angle Supports@ 22" per frame

The above includes:

1592 - White Plastic Broiler/Breeder Flooring - 2' x 3'
398 - Val-Co Trimmed Front Slats - 24" x 16.4"
398 - Val-Co Trimmed Top Slats - 24" x 24"
398 - Spring Clips for front slats
4 - Spring Clips for End Assembly of front slats
20 End Rail Angle Support, Slat to Rail (16@33" and 4@ 21")
2408 - Nut, KEP 5/16 - 18 ZP
2408 - Screw, 5/16 - 18 x 1 HHCS ZP

ADD IF ENDS OPEN Lattice Kit - 8' long - This assumes a longer house so end(s) of slats needs to be enclosed.

NOTE:	**Add GRY or BLK to Grid or Slat # for Grey or Black**	SHIP WEIGHT		LIST PRICE
CATALOG #	ITEM DESCRIPTION (Slats White unless # addendum)	LBS.	KG.	
631122	6' x 9' Grid Section with 4 Wall Brackets	171.2	77.8	
631123	6' x 9' Grid End Section with 4 Wall Brackets	164.7	74.9	
630911	6' x 12' Grid Section with 4 Wall Brackets	217.6	98.9	
630912	6' x 12' Grid End Section with 4 Wall Brackets	204.0	92.7	
630905	6' x 14' Grid Section with 4 Wall Brackets	217.6	98.9	
630910	6' x 14' Grid End Section with 4 Wall Brackets	204.0	92.7	
630000	2' x 3' White Val-Co Slat	5.1	2.3	
630000GRY	2' x 3' Grey Val-Co Slat	5.2	2.4	
630000BLK	2' x 3' Black Val-Co Slat	5.2	2.4	
630759	2' x 16.4" White Val-Co Trimmed Front Slat	2.5	1.1	
630909	2' X 2' White Val-Co Trimmed Top Slat	2.5	1.1	
630909GRY	2' X 2' Grey Val-Co Trimmed Top Slat	3.5	1.6	
630909BLK	2' X 2' Black Val-Co Trimmed Top Slat	3.5	1.6	
631013	Lattice Kit - 8' long	32.3	14.7	
630791	Interim Slat Clips - In Row	0.0	0.0	
630836	End Slat Clips - End of Row	0.0	0.0	
630842	End of Row Angle Support - 33"	1.2	0.5	
630899	End of Row Angle Support - 21"	0.8	0.4	
690142	#12 - 24 x 7/8 TEK Screw - 3/Angle Support Required	0.0	0.0	
630864	Wall Mount Bracket Kit, Plate & Pipe	0.8	0.3	
690168	Screw, 5/16 - 18	0.0	0.0	
690020	Nut, KEP 5/16 - 18ZP	0.0	0.0	

Toll-free: 1-800-99VALCO
Phone: (+1) 419-678-8731
Fax: (+1) 419-678-2200

POULTRY FLOORING

RAIL SUPPORT TYPE - WINCHABLE & NON-WINCHABLE

HOW TO ORDER SUPPORT RAILS

- Determine quantity of support rail kits required.
- Divide total length of slats needed by 2 (2' wide frame) less 1 for the End Kit to determine number of frames needed
- For example, a 400' length of slats (400' on one side of a community nest.) would require 199 support rail kit frames (400 divided by 2 = 200-1=199).
- Remember to order 1 Special End Kit for each row of slats. Each kit has an angle 33" long for every 3' of slat and includes 3 TEK screws per 33" angle.

ORDER EXAMPLE

Here is a sample order list for a house with 2 slat areas, each area 9' wide x 400' long:

398 - 2' x 9' Rail Support Frame Assembly, Winchable
2 - 2' x 9' Rail Support End Frame Assembly, Winchable
This includes the following:
1200 - Val-Co plastic Broiler/Breeder Flooring - 2' x 3'
400 - Trimmed Front Slats
398 - Spring Clips for Front Slats
4 Spring Clips for End Assembly of Front Slats
12 End Rail Angle Support, Slat to Rail (33" Angle)
2400 - Nut, KEP 5/16 - ZP
2400 - Screw, 5/16 - 18 x 1 HHCS ZP

NON-WINCHING		SHIP WEIGHT		LIST PRICE
CATALOG #	ITEM DESCRIPTION	LBS.	KG.	
630823	3' End Kit Assembly	35.3	16.0	
630819	3' Interim Kit Assembly	15.4	7.0	
630824	6' End Kit Assembly	63.1	28.7	
630820	6' Interim Kit Assembly	26.3	12.0	
630825	9' End Kit Assembly	113.1	51.4	
630821	9' Interim Kit Assembly	47.8	21.7	
630826	12' End Kit Assembly	148.6	67.5	
630822	12' Interim Kit Assembly	62.4	28.4	

Toll-free: 1-800-99VALCO
Phone: (+1) 419-678-8731
Fax: (+1) 419-678-2200

POULTRY FLOORING

RAIL SUPPORT TYPE - WINCHABLE & NON-WINCHABLE

WINCHING		SHIP WEIGHT		LIST PRICE
CATALOG #	ITEM DESCRIPTION	LBS.	KG.	
630666	3' End Kit Assembly	37.2	16.9	
630662	3' Interim Kit Assembly	17.1	7.8	
630667	6' End Kit Assembly	65.0	29.5	
630663	6' Interim Kit Assembly	28.2	12.8	
630668	9' End Kit Assembly	115.9	52.7	
630664	9' Interim Kit Assembly	50.8	23.1	
630669	12' End Kit Assembly	151.1	68.7	
630665	12' Interim Kit Assembly	65.9	29.9	

OPTIONAL PARTS		SHIP WEIGHT		LIST PRICE
CATALOG #	ITEM DESCRIPTION	LBS.	KG.	
630000	2' x 3' White Slat	5.1	2.3	
630000GRY	2' x 3' Grey Slat	5.2	2.4	
630000BLK	2' x 3' Black Slat	5.2	2.4	
630759	2' x 16.4" White Val-Co Trimmed Front Slat	2.5	1.1	
630791	Interim Slat Clip for Front	0.0	0.0	
630836	End of Row Slat Clip for Front	0.0	0.0	
630842	End of Row Galvanized Angle Support - 33"	1.2	0.5	
690142	#12 - 24 x 7/8 TEK Screw - 3 per Angle	0.0	0.0	

Toll-free: 1-800-99VALCO
Phone: (+1) 419-678-8731
Fax: (+1) 419-678-2200

POULTRY FLOORING
WOOD SUPPORT TYPE WITH VAL-CO SLATS

HOW TO ORDER PLASTIC SLATS FOR WOOD FRAMES

- Order slats for each frame and gap between frames. Take the total square feet and divide by 6 plus add additional slats if any partial slats needed.
- Order 12 screws per slat size #10 x 3" stainless steel.
- Please note only single joists needed to secure the Val-Co slat since the Val-Co slats are offset. Slats must be supported every 2'.

ORDER EXAMPLE

Here is a sample order list for a house 40' wide x 400' long. Since neither width nor length is divisible by 3, one or the other will need to be cut so example is based on cut slats at 1 end.

2,680 - Val-Co Poultry Slat for Flooring - 2' x 3'
32,160 - Screw, #10 x 3" Stainless Steel

		SHIP WEIGHT		LIST PRICE
CATALOG #	ITEM DESCRIPTION	LBS.	KG.	
630000	2' x 3' White Val-Co Slat	5.1	2.3	
630000GRY	2' x 3' Grey Val-Co Slat	5.2	2.4	
630000BLK	2' x 3' Black Val-Co Slat	5.2	2.4	
690330	Screw, #10 x 3" Stainless Steel Phillips Head	0.0	0.0	

Made of high-impact polypropylene material providing superior impact and wear resistance.
Quantity discounts are available - call for pricing & details.

RECOMMENDED INSTALLATION

It is recommended to use joists commensurate with load and span. Fasten slat to supports with #10 Phillips head stainless steel screw at least 3" (5.08cm) in length. Single joists on the 3' side required so slats are supported on 2' centers. The following is a guide however always consult a qualified Engineer or Architect and follow all local codes:
Floor joist for a span of up to 6' requires 2" x 6" #2 Fir
Floor joist for a span of up to 11' 4" requires 2" x 8" #2 Fir
Floor joist for a span of up to 17' 5" requires 2" x 10" #2 Fir
Install above 70°F to minimize thermal expansion.

NOTE:

This plastic poultry flooring should be installed only after insuring it meets all building codes and consulting a qualified engineer or architect. Installation must be done in accordance with installation instructions.

Toll-free: 1-800-99VALCO
Phone: (+1) 419-678-8731
Fax: (+1) 419-678-2200

POULTRY FLOORING
INSTALLATION INSTRUCTIONS

- The core temperature of the slats must be at least 40°F (5°C) when they are installed (i.e. they must be stored in a location prior to installation that is at least 40°F (5°C) for approximately 24 hours).
- During installation, the house temperature should remain above 40°F (5°C).
- The slats are made of polypropylene, thus they will expand and contract as the temperature changes. Make sure you take this into account as you install your substructure.
- ***Warning!*** **Poultry flooring is designed to support the weight of chickens. Workers should walk only on supported areas of the flooring.**
- If a hard object > 10 lbs. (4.5 kg) is dropped onto a slat, that slat should be replaced. Internal damage may or may not be visible.
- It is recommended installation be done at temperatures above 70°F to minimize thermal expansion.

Toll-free: 1-800-99VALCO
Phone: (+1) 419-678-8731
Fax: (+1) 419-678-2200

SECTION 14
FLAT CHAIN FEEDER

IN THIS CATALOG SECTION

PAGE NUMBER	CONTENTS
14-02	How to Order a Flat Chain Feeder
14-03	Horsepower Recommendations
14-04 thru 14-05	Hoppers & Drive Hoppers - Belt Drive
14-06 thru 14-07	Pulley & Belt Kits
14-08	Motors for V-Belt Drives
14-09	Hoppers & Drives - Direct Drive
14-10	Direct Drive Motors
14-11	Platform Scales - Weigh Hopper
14-12	Corners - Chain - Drop Outlet - Feed Fan Options
14-13	Hen Trough & Accessories
14-14	Pullet Trough & Accessories
14-15	Short Trough Sections
14-16	Wire Grill Profiles & End Caps
14-17 thru 14-18	Regular Profile Grill
14-19	Hi-Pro Profile Grill
14-20	Hi-V Profile Grill
14-21	Straight-line Narrow Loop Chain Feeder
14-22	Manual Feed Troughs

FLAT CHAIN REPAIRS

SEE REPAIR LISTING & REFERENCE MATERIAL IN SEPARATE CATALOG (Part #: 990232)

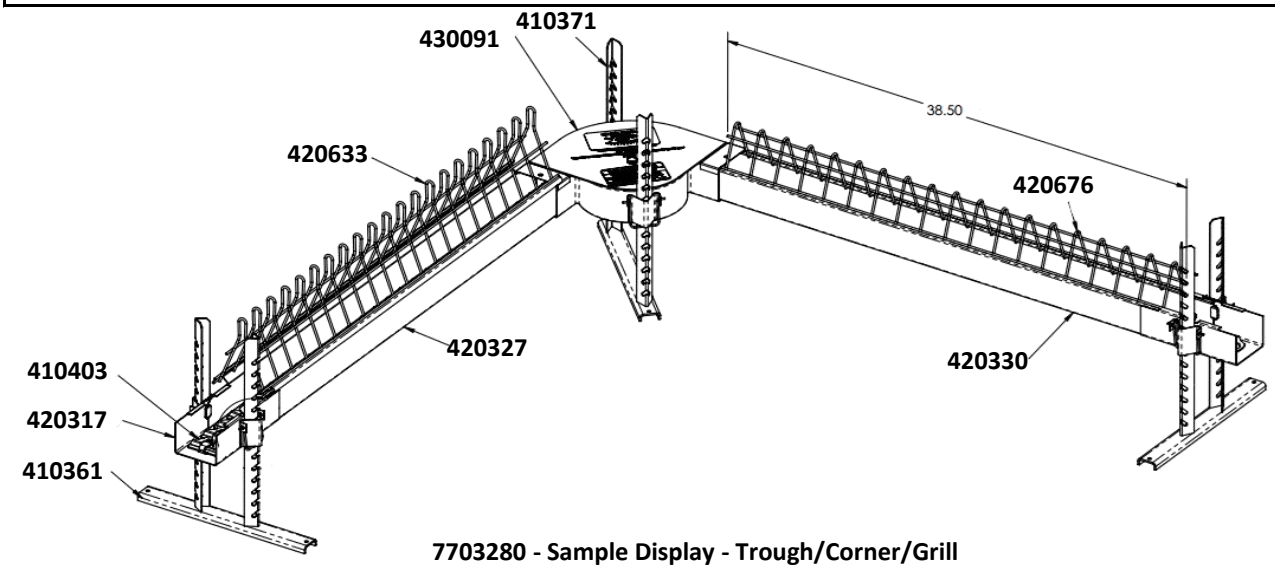

7703280 - Sample Display - Trough/Corner/Grill

Toll-free: 1-800-99VALCO
Phone: (+1) 419-678-8731
Fax: (+1) 419-678-2200

HOW TO ORDER A FLAT CHAIN FLOOR FEEDER

After layout of floor chain feeder line or lines are determined, order the following components as needed to complete your flat chain feeder order:

- Select drive and/or auxillary fill hopper as needed from pages 14-04 & 14-05. Also select extension hoppers if required.
- BELT DRIVE: After checking recommended horsepower requirement on page 14-03, select pulley & belt kit(s) from pages 14-06 & 14-07. Note that 2-way drive hoppers require two motors and two pulley & belt kits.
- DIRECT DRIVE: After checking recommended horsepower requirement on page 14-03, select correct direct drive frame & gearbox unit on page 14-09 and correct motor from page 14-10. If chain feeder is for pullets, also select (1) 421800 per drive.
- Select farm duty motor(s) from listing on page 14-08.
- If platform scale & accessories are to be used, select from listing on page 14-11.
- Select corners from page 14-12. If chain feeder is for pullets, also select 1 corner chick guard per corner.
- Select proper quantity of chain from page 14-12. Note that chain is only sold in 50' increments. Also select at least one chain breaker tool per house.
- If required, select number of outlet drops need from page 14-12.
- Select hen or pullet trough, trough couplers and hangers/stands from listing on pages 14-13 thru 14-14.
- Select wire grill as needed from listings on pages 14-17 thru 14-20. Note the special production charge for grills on pages 14-17 thru 14-20. Also select grill end caps on page 14-16 (2 per corner + 2 per hopper outlet) when using male exclusion grill.
- Select wire grill as needed from listings on pages 14-17 thru 14-20. Note the special production charge for grills on pages 14-17 thru 14-20. Also select grill end caps on page 14-16 (2 per corner + 2 per hopper outlet) when using male exclusion grill.
- Maximum recommended chain speed for cage free layers - 90 fpm
- Approximate Feed Delivery Rates per minute based on material @ 40 lbs. per cubic foot:

@ 60 fpm	30 - 100 lbs.	13.6 - 45.4 kgs.
@ 90 fpm	45 - 125 lbs.	20.4 - 56.7 kgs.
@ 120 fpm	60 - 150 lbs.	27.2 - 68.0 kgs.

- Feed delivery rates are approximate only and subject to variables such as feed density and moisture content.
- Trough space requirement per bird:

Broilers	2 - 3"	(5.1 - 7.6 cm)
Pullets	4.5 - 6"	(11.4 - 15.2 cm)
Broiler Breeders	4.5 - 6"	(11.4 - 15.2 cm)

- Each linear foot of trough equals 24" (61cm) of trough space.
- For assistance in figuring flat chain cage feeding, please contact your sales representative.

Toll-free: 1-800-99VALCO
Phone: (+1) 419-678-8731
Fax: (+1) 419-678-2200

HORSEPOWER RECOMMENDATIONS FOR FLAT CHAIN FEEDER

BELT DRIVE - 1 Drive per Chain Loop

CHAIN SPEED PER MINUTE	TOTAL CHAIN LENGTH (up to but not including)								
	To 400' 122m	500' 152m	600' 183m	700' 213m	800' 244m	900' 274m	1000' 305m	1100' 335m	1200' 366m
20-40 Feet 6-12 Meters	.75 hp		1.00 hp		1.50 hp				
60 Feet 18 Meters	1.00 hp		1.50 hp			2.00 hp			
80-90 Feet 24-27 Meters	1.00 hp	1.50 hp		2.0 hp					
120 Feet 36 Meters	3.00 hp**								

BELT DRIVE, 2 Drives per Chain Loop

CHAIN SPEED PER MINUTE	TOTAL CHAIN LENGTH (up to but not including)								
	To 400' 122m	500' 152m	600' 183m	700' 213m	800' 244m	900' 274m	1000' 305m	1100' 335m	1200' 366m
20-40 Feet 6-12 Meters	.75 hp				1.00 hp		1.50 hp		
60 Feet 18 Meters	.75 hp		1.00 hp			1.50 hp		2.00 hp	
80-90 Feet 24-27 Meters	.75 hp	1.00 hp		1.50 hp			2.00 hp		
120 Feet 36 Meters	3.00 hp**								

Note: Table lists HP per drive. Space drives equidistant from each other in the loop.

DIRECT DRIVE - 1 Drive per Chain Loop

CHAIN SPEED PER MINUTE	TOTAL CHAIN LENGTH (up to but not including)								
	To 400' 122m	500' 152m	600' 183m	700' 213m	800' 244m	900' 274m	1000' 305m	1100' 335m	1200' 366m
60 Feet 18 Meters	1.00 HP		1.50 hp			2.00 hp			
90 Feet 27 Meters	1.00 hp	1.50 hp		2.00 hp					
120 Feet 36 Meters	2.00 hp								

DIRECT DRIVE, 2 Drives per Chain Loop

CHAIN SPEED PER MINUTE	TOTAL CHAIN LENGTH (up to but not including)								
	To 400' 122m	500' 152m	600' 183m	700' 213m	800' 244m	900' 274m	1000' 305m	1100' 335m	1200' 366m
60 Feet 18 Meters	.75 HP		1.00 hp			1.50 hp		2.00 hp	
90 Feet 27 Meters	.75 hp	1.00 hp		1.50 hp			2.00 hp		
120 Feet 36 Meters	1.50 hp			2.00 hp					

Note: Table lists HP per drive. Space drives equidistant from each other in the loop.

*** 3 HP motor (high rpm) recommended for all 120fpm circuits with belt drive.*

Toll-free: 1-800-99VALCO
Phone: (+1) 419-678-8731
Fax: (+1) 419-678-2200

BELT DRIVES

SUSPENDED MODEL HOPPERS BELT DRIVE LESS MOTOR(S)

CATALOG NUMBER	ITEM DESCRIPTION	SHIP WEIGHT LBS.	SHIP WEIGHT KGS.	LIST PRICE
420700	1-LINE SUSPENDED MODEL DRIVE HOPPER - 60 lb. (27kg) hopper capacity - Extension hopper available below - Select pulley & belt kit from Chart A on page 14-06	149.0	67.6	
420820	1-LINE SUSPENDED MODEL AUXILARY FILL HOPPER - 60 lb. (27kg) hopper capacity - Extension hopper available below - Pulley & belt kit not required	59.0	26.8	
410100	2-LINE 1-WAY SUSPENDED MODEL DRIVE HOPPER - 60 lb. (27kg) hopper capacity - Extension hopper available below - Select pulley & belt kit from Chart C on page 14-07	198.0	89.8	
420780	2-LINE SUSPENDED MODEL AUXILARY FILL HOPPER - 60 lb. (27kg) hopper capacity - Extension hopper available below - Pulley & belt kit not required	61.0	27.7	
410150	2-LINE 2-WAY SUSPENDED MODEL DRIVE HOPPER - 60 lb. (27kg) hopper capacity - Extension hopper available below - Select two pulley & belt kits from Chart C on page 14-07 - Select two motors from page 14-08	287.0	130.2	
410600	4-LINE 2-WAY SUSPENDED MODEL DRIVE HOPPER - 100 lb. (45kg) hopper capacity - Extension hopper available below - Select two pulley & belt kits from Chart C on page 14-07 - Select two motors from page 14-08	385.0	174.6	
420950	4-LINE SUSPENDED AUXILLARY HOPPER - No Top Cover - 60 lb. (27kg) hopper capacity - Can be used with I line extention hoppers	53.0	24.0	
420900	Low Profile Extension Hopper with Top Cover for 1-Line Hoppers - 155 lb. (70kg) capacity - Hopper is 18.5" tall	34.0	15.4	
420551	Extension Hopper With Top Cover for 1-Line Hoppers - 220 lb. (100kg) capacity	35.0	15.9	
410624	Extension Hopper With Top Cover for 2-Line Hoppers - 220 lb. (100kg) capacity	33.9	15.4	
410625	Extension Hopper With Top Cover for 4-Line Hoppers - 220 lb. (100kg) capacity	36.1	16.4	
411040	Lid Kit for Suspension Base Hopper	8.6	3.9	
421970	Flat Chain Large Cap Hopper 350 Lb Capacity	61.5	27.9	
420880	Adjustable Hopper Legs - Carton of 4 Legs	21.5	9.7	

NOTE: *Chain speeds of 60-90-120 fpm are available for the above units - select pulley & belt kit(s) from pages 14-06 & 14-07.*
NOTE: *Place drives 36" from corners to maximize component life.*

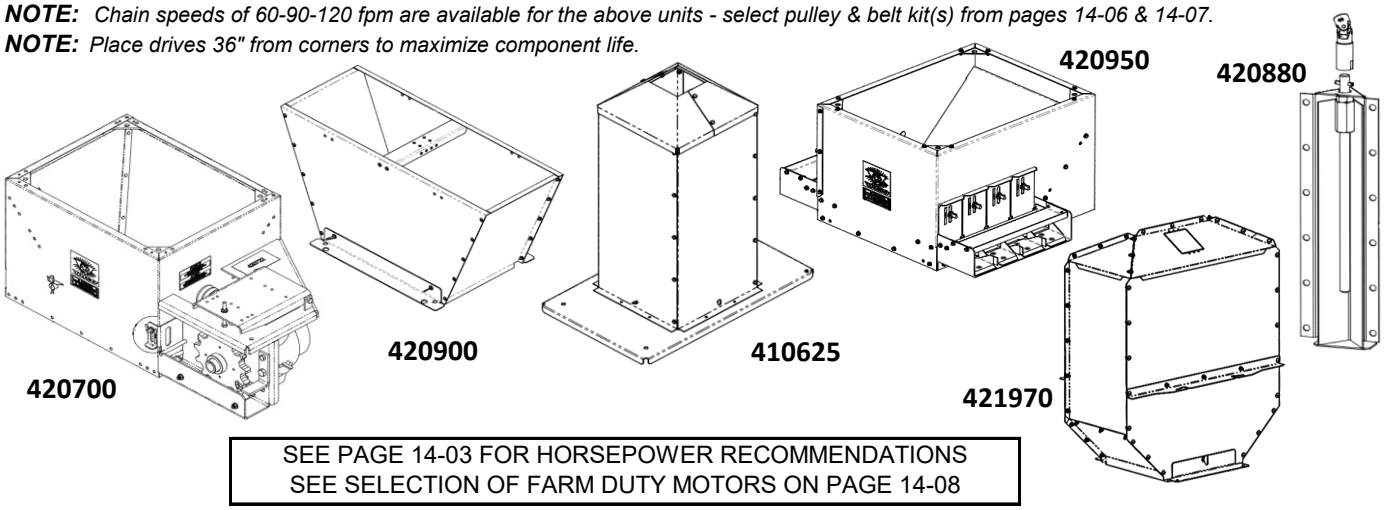

SEE PAGE 14-03 FOR HORSEPOWER RECOMMENDATIONS
SEE SELECTION OF FARM DUTY MOTORS ON PAGE 14-08

Toll-free: 1-800-99VALCO
Phone: (+1) 419-678-8731
Fax: (+1) 419-678-2200

BELT DRIVES

CORNER DRIVE HOPPERS BELT DRIVE LESS MOTOR

CATALOG NUMBER	ITEM DESCRIPTION	SHIP WEIGHT LBS.	SHIP WEIGHT KGS.	LIST PRICE
410031	1-LINE CORNER MODEL DRIVE HOPPER - Select pulley & belt kit from Chart D on page 14-07	135.0	61.2	
410030	For chain speed of 20-40 fpm with the appropriate pulley & belt kit(s).	135.0	61.2	

NOTE : *Chain speeds of 60-90-120 fpm are available for the above units - select pulley & belt kit(s) from pages 14-06 & 14-07.*

FLOOR MODEL DRIVE HOPPERS
BELT DRIVE LESS MOTOR(S)

CATALOG NUMBER	ITEM DESCRIPTION	SHIP WEIGHT LBS.	SHIP WEIGHT KGS.	LIST PRICE
410270	1-LINE FLOOR MODEL DRIVE HOPPER - 400 lb. (182 kg.) hopper capacity - Select pulley & belt kit from Chart B on page 14-06	214.0	97.1	
420790	1-LINE FLOOR MODEL AUXILARY FILL HOPPER - 400 lb. (182 kg.) hopper capacity - Pulley & belt kit not required	120.0	54.4	
410200	2-LINE 1-WAY FLOOR MODEL DRIVE HOPPER - 400 lb. (182 kg.) hopper capacity - Select pulley & belt kit from Chart C on page 14-07	275.0	124.7	
410250	2-LINE 2-WAY FLOOR MODEL DRIVE HOPPER - 400 lb. (182 kg.) hopper capacity - Select two pulley & belt kits from Chart C on page 14-07 - Select two motors from page 14-08	456.0	206.8	
410650	4-LINE 2-WAY FLOOR MODEL DRIVE HOPPER - 400 lb. (182 kg.) hopper capacity - Select two pulley & belt kits from Chart C on page 14-07 - Select two motors from page 14-08	462.5	209.8	
411027	Cover for 400 pound (182kg) hopper	19.0	8.6	

NOTE:
Chain speeds of 60-90-120 fpm are available for the above units - select pulley & belt kit(s) from pages 14-06 & 14-07.

Note: Place drives 36" from corners to maximize component life.

SEE PAGE 14-03 FOR HORSEPOWER RECOMMENDATIONS
SEE SELECTION OF FARM DUTY MOTORS ON PAGE 14-08

HOPPER LEVEL CONTROL

CATALOG #	ITEM DESCRIPTION	SHIP WEIGHT LBS.	SHIP WEIGHT KG.	LIST PRICE
720097	Adjustable-Mechanical hopper level control. 220V, 20amp, 1-3phase, 50-60hz	4.8	2.2	

Toll-free: 1-800-99VALCO
Phone: (+1) 419-678-8731
Fax: (+1) 419-678-2200

PULLEY & BELT KITS

CHART A

PULLEY & BELT KITS
FOR 1-LINE SUSPENDED MODEL DRIVE HOPPERS

CATALOG NUMBER	CHAIN SPEED		ELECTRIC INFO	MOTOR SHAFT DIAMETER	SHIP WEIGHT		LIST PRICE
	FEET/MINUTE	METERS/MINUTE			LBS.	KGS.	
420740	60	18	60 Hz	5/8"	2.0	0.9	
420748	60	18	60 Hz	7/8"	1.9	0.9	
420741	60	18	50 Hz	5/8"	2.7	1.2	
420749	60	18	50 Hz	7/8"	4.5	2.0	
420742	90	27	60 Hz	5/8"	4.0	1.8	
420759	90	27	60 Hz	7/8"	0.0	0.0	
420743	90	27	50 Hz	5/8"	4.0	1.8	
420765	90	27	50 Hz	7/8"	0.0	0.0	
420744	120	36	60 Hz	5/8"	4.0	1.8	
420748	120	36	60 Hz	7/8"	1.9	0.9	
420745	120	36	50 Hz	5/8"	4.0	1.8	
420749	120	36	50 Hz	7/8"	4.5	2.0	
420746	25-40	7.5-12	60 Hz	5/8"	4.0	1.8	
420747	20-30	6-9	50 Hz	5/8"		0.0	

CHART B

PULLEY & BELT KITS
FOR 1-LINE FLOOR MODEL DRIVE HOPPERS

CATALOG NUMBER	CHAIN SPEED		ELECTRIC INFO	MOTOR SHAFT DIAMETER	SHIP WEIGHT		LIST PRICE
	FEET/MINUTE	METERS/MINUTE			LBS.	KGS.	
415070	60	18	60 Hz	5/8"	3.7	1.7	
415103	60	18	60 Hz	7/8"	3.6	1.6	CALL
415082	60	18	50 Hz	5/8"	6.0	2.7	
415146	60	18	50 Hz	7/8"		0.0	
415097	80	24	60 Hz	5/8"	7.0	3.2	CALL
415113	80	24	60 Hz	7/8"	4.0	1.8	
415147	90	27	60 Hz	5/8"	9.0	4.1	
415134	90	27	60 Hz	7/8"	9.0	4.1	
415084	90	27	50 Hz	5/8"	5.2	2.4	
415153	90	27	50 Hz	7/8"		0.0	
415074	120	36	60 Hz	5/8"	3.3	1.5	
415118	120	36	60 Hz	7/8"	3.2	1.5	
415086	120	36	50 Hz	5/8"	3.9	1.8	
415132	120	36	50 Hz	7/8"	3.7	1.7	
415076	25-40	7.5-12	60 Hz	5/8"	15.0	6.8	
415088	40	12	50 Hz	5/8"	16.0	7.3	
415094	25	7.5	50 Hz	5/8"	17.0	7.7	

REFER TO MOTOR LISTING ON PAGE 14-08 FOR SHAFT SIZE OF SELECTED MOTOR

Toll-free: 1-800-99VALCO
Phone: (+1) 419-678-8731
Fax: (+1) 419-678-2200

PULLEY & BELT KITS

CHART C

PULLEY & BELT KITS
FOR 2-LINE & 4-LINE SUSPENDED & FLOOR MODEL DRIVE HOPPERS

CATALOG NUMBER	CHAIN SPEED		ELECTRIC INFO	MOTOR SHAFT DIAMETER	SHIP WEIGHT		LIST PRICE
	FEET/MINUTE	METERS/MINUTE			LBS.	KGS.	
415071	60	18	60 Hz	5/8"	3.7	1.7	
415624	60	18	60 Hz	7/8"	3.2	1.5	
415083	60	18	50 Hz	5/8"	4.0	1.8	
415151	60	18	50 Hz	7/8"			
415107	80	24	60 Hz	5/8"	4.0	1.8	CALL
415114	80	24	60 Hz	7/8"	4.0	1.8	
415073	90	27	60 Hz	5/8"	4.4	2.0	
415126	90	27	60 Hz	7/8"	4.0	1.8	
415085	90	27	50 Hz	5/8"	4.7	2.1	
415161	90	27	50 Hz	7/8"			
415075	120	36	60 Hz	5/8"	3.3	1.5	
415162	120	36	60 Hz	7/8"	3.2	1.4	
415087	120	36	50 Hz	5/8"	4.0	1.8	
415121	120	36	50 Hz	7/8"	4.0	1.8	
415077	25-40	7.5-12	60 Hz	5/8"	4.0	1.8	
415089	40	12	50 Hz	5/8"	4.0	1.8	
415095	25	7.5	50 Hz	5/8"	4.0	1.8	

CHART D

PULLEY & BELT KITS
FOR INDEPENDENT, STRAIGHT-THRU AND CORNER DRIVES

CATALOG NUMBER	CHAIN SPEED		ELECTRIC INFO	MOTOR SHAFT DIAMETER	SHIP WEIGHT		LIST PRICE
	FEET/MINUTE	METERS/MINUTE			LBS.	KGS.	
415078	60	18	60 Hz	5/8"	4.0	1.8	
415164	60	18	50 Hz	5/8"			
415079	90	27	60 Hz	5/8"	4.0	1.8	
415091	90	27	50 Hz	5/8"	4.0	1.8	
415080	120	36	60 Hz	5/8"	4.0	1.8	
415092	120	36	50 Hz	5/8"	4.0	1.8	
415081	25-40	7.5-12	60 Hz	5/8"	4.0	1.8	
415093	40	12	50 Hz	5/8"	4.0	1.8	
415096	25	7.5	50 Hz	5/8"	4.0	1.8	

REFER TO MOTOR LISTING ON PAGE 14-08 FOR SHAFT SIZE OF SELECTED MOTOR

Toll-free: 1-800-99VALCO
Phone: (+1) 419-678-8731
Fax: (+1) 419-678-2200

FARM DUTY MOTORS - FOR BELT DRIVE UNITS

60HZ - 1 PHASE

CATALOG NUMBER	HORSE-POWER	HZ	1 OR 3 PHASE	MOTOR VOLTAGE	MOTOR RPM	ENCLO-SURE	NEMA FRAME	SHAFT SIZE	THERMO PROTECT	SHIP WEIGHT	LIST PRICE
920402	.75	60	1	115/230	1725	TEFC	56	5/8"	Manual	27.0	
920403	1.0	60	1	115/230	1725	TEFC	56	5/8"	Manual	34.0	
920404	1.5	60	1	115/230	1725	TEFC	56H	5/8"	Manual	44.0	
920405	2.0	60	1	115/230	1725	TEFC	56HZ	7/8"	Manual	49.3	
410129	3.0	60	1	230	3450	Drip Proof	56Y	5/8"	Manual	39.6	

60HZ - 3 PHASE

CATALOG NUMBER	HORSE-POWER	HZ	1 OR 3 PHASE	MOTOR VOLTAGE	MOTOR RPM	ENCLO-SURE	NEMA FRAME	SHAFT SIZE	THERMO PROTECT	SHIP WEIGHT	LIST PRICE
920442	.75	60	3	230/460	1725	TEFC	56	5/8"	Manual	24.0	
920443	1.0	60	3	230/460	1745	TEFC	56	5/8"	Manual	26.0	
920444	1.5	60	3	230/460	1745	TEFC	56H	5/8"	Manual	30.0	
920445	2.0	60	3	230/460	1745	TEFC	145T	7/8"	None	35.0	
920419	3.0	60	3	208-230/460	3450	TEFC	145T	7/8"	None	41.2	

50HZ - 1 PHASE

CATALOG NUMBER	HORSE-POWER	HZ	1 OR 3 PHASE	MOTOR VOLTAGE	MOTOR RPM	ENCLO-SURE	NEMA FRAME	SHAFT SIZE	THERMO PROTECT	SHIP WEIGHT	LIST PRICE
920552	.75	50	1	110/220	1425	TEFC	56	5/8"	None	23.0	
920553	1.0	50	1	110/220	1425	TEFC	56H	5/8"	None	25.0	
920554	1.5	50	1	110/220	1500	TEFC	56H	5/8"	Manual	30.0	
920555	2.0	50	1	220	1500	TEFC	182T	1-1/8"	Manual	85.0	
410675	3.0	50	1	220	3000	IP22	56H	5/8"	None	47.0	

50HZ - 3 PHASE

CATALOG NUMBER	HORSE-POWER	HZ	1 OR 3 PHASE	MOTOR VOLTAGE	MOTOR RPM	ENCLO-SURE	NEMA FRAME	SHAFT SIZE	THERMO PROTECT	SHIP WEIGHT	LIST PRICE
920562	.75	50/60	3	208-220/440 or 190/380V	1725/1800	TEFC	56	5/8"	None	24.0	
920563	1.0	50/60	3	208-220/440 or 190/380V	1725/1800	TEFC	56H	5/8"	None	30.0	
920564	1.5	50/60	3	208-220/440 or 190/380V	1725/1800	TEFC	56H	5/8"	None	34.0	
920565	2.0	50/60	3	208-220/440 or 190/380V	1725/1800	TEFC	56C	5/8"	None	30.0	
920419	3.0	50/60	3	208-220/440 or 190/380V	2875	TEFC	145T	7/8"	None	41.2	

SEE CATALOG SECTION 20 FOR A COMPLETE LISTING OF ALL ELECTRIC MOTORS

Toll-free: 1-800-99VALCO
Phone: (+1) 419-678-8731
Fax: (+1) 419-678-2200

INDEPENDENT DIRECT DRIVES

AUXILIARY FILL HOPPERS FOR USE WITH INDEPENDENT DIRECT DRIVE

CATALOG NUMBER	ITEM DESCRIPTION	SHIP WEIGHT LBS.	SHIP WEIGHT KGS.	LIST PRICE
420820	1-LINE SUSPENDED MODEL AUXILARY FILL HOPPER - 60 lb. (27kg) hopper capacity - Galvanized construction - Extension hopper available below	59.0	26.8	
420790	1-LINE FLOOR MODEL AUXILARY FILL HOPPER - 400 lb. (182 kg.) hopper capacity - Extension not available	120.0	54.4	
420780	2-LINE SUSPENDED MODEL AUXILARY FILL HOPPER - 60 lb. (27kg) hopper capacity - Extension hopper available below	61.0	27.7	
420551	Extension Hopper With Top Cover for 1-Line Hoppers - 220 lb. (100kg) capacity	35.0	15.9	
410624	Extension Hopper With Top Cover for 2-Line Fill Hopper - 220 lb. (100kg) capacity - Includes top cover	33.9	15.4	
420900	Low Profile Extension Hopper with Top Cover for 1-Line Hoppers - 155 lb. (70kg) capacity - Hopper is 18.5" tall	34.0	15.4	
411040	Lid Kit for Suspension Base Hopper	8.6	3.9	
420880	Adjustable Hopper Legs - Carton of 4 Legs	21.5	9.7	
421800	Direct Drive Guard kit, for use when using Pullet Trough	1.7	0.8	

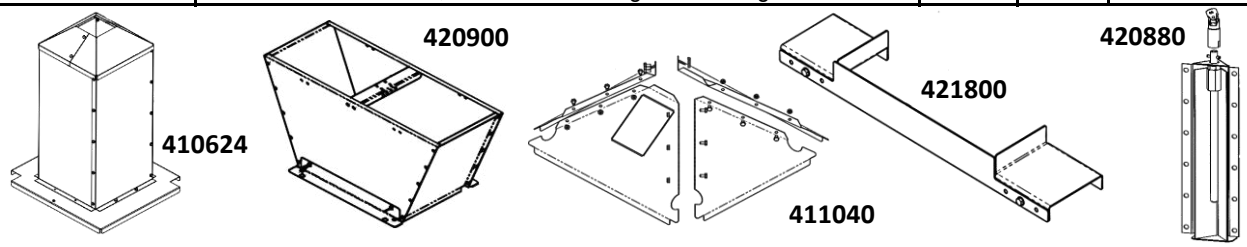

TO ORDER A COMPLETE INDEPENDENT DIRECT DRIVE UNIT WITH MOTOR

1. Determine chain speed desired and horsepower requirement (see chart on page 14-03).
2. Order correct frame & gearbox unit from listing below, after determining chain speed & horsepower requirement.
3. Order correct motor from page 14-10.

INDEPENDENT DIRECT DRIVE FRAME & GEARBOX UNITS (MOTOR NOT INCLUDED)

CATALOG #	ITEM DESCRIPTION	SHIP WEIGHT LBS.	SHIP WEIGHT KG.	LIST PRICE
420250	Frame & Gearbox Assy - 60 or 120fpm - Less Than 1.5	86.8	39.4	
420252	Frame & Gearbox Assy - 60 or 120fpm - 1.5 - 2.0 HP	108.8	49.4	
420251	Frame & Gearbox Assy - 90fpm - Less Than 1.5 HP	91.8	41.6	
420253	Frame & Gearbox Assy - 90fpm - 1.5 - 2.0 HP	108.8	49.4	

If using Direct Drive frame and gearbox with pullet trough, order (1) 421800.

SA DIRECT DRIVE KITS

420361	SA Direct Drive Kit, 1L, 60/120 FPM, 1.5 HP or Greater	58.5	26.5	
420362	SA Direct Drive Kit, 1L, 90 FPM, 1.5 HP or Greater	58.5	26.5	

SA Direct Drives can be used in the same applications and with the same guidelines as Independent Direct Drives, but they are not direct replacements for each other. In the case where two drives are used on one loop, SA Direct Drives and Independent Direct Drives should NOT be mixed."

INDEPENDENT DIRECT DRIVE FRAME & GEARBOX UNITS with Motor

420970	Compact Drive 120fpm, 3HP(2.2kW), 220v, 60Hz,1PH	86.8	39.4	
420971	Compact Drive 120fpm, 3HP(2.2kW), 415-460v, 50Hz,3PH	86.8	39.4	
420972	Compact Drive 120fpm, 3HP(2.2kW), 220v, 50Hz,1PH	86.8	39.4	
420973	Compact Drive 120fpm, 3HP(2.2kW), 208-230/460v, 60Hz,3PH	86.8	39.4	
420974	Compact Drive 120fpm, 3HP(2.2kW), 190-380v, 50Hz,3PH	86.8	39.4	
420940	Compact Direct Drive Floor Stand	8.3	3.8	

Toll-free: 1-800-99VALCO
Phone: (+1) 419-678-8731
Fax: (+1) 419-678-2200

INDEPENDENT DIRECT DRIVES

MOTORS FOR 60 FPM CHAIN SPEED

CATALOG NUMBER	ITEM DESCRIPTION	SHIP WEIGHT LBS.	SHIP WEIGHT KGS.	LIST PRICE
420248	.75 HP - 60 HZ - 115/208-230 -- Single Phase - 1745 RPM	28.8	13.1	
611032	1.0 HP - 60 HZ - 115/208-230v - Single Phase - 1725 RPM	32.0	14.6	
420259	1.5 HP - 60 HZ - 115/208-230v - Single Phase - 1800 RPM	39.0	17.7	
775064	2.0 HP - 60 HZ - 115/208-230v - Single Phase - 1730 RPM	49.6	22.5	
420255	.75 HP - 60 HZ - 208/230v - 3-Phase - 1725 RPM	11.8	5.4	
612146	1.0 HP - 60 HZ - 190/380-230/460v - 3-Phase - 1760 RPM	36.4	16.6	
980109	1.5 HP - 60 HZ - 190/380v - 3-Phase - 1750 RPM	41.1	18.7	
980109	1.5 HP - 50 HZ - 208-230/460v - 3-Phase - 1450 RPM	41.1	18.7	
420285	2.0 HP - 60 HZ - 190-380v - 3-Phase - 1750 RPM	45.6	20.7	
420285	2.0 HP - 50 HZ - 208-230/460v - 3-Phase - 1430 RPM	45.6	20.7	
420263	.75 HP - 50 HZ - 110/220v - Single Phase - 1500 RPM	14.3	6.5	
420264	1.0 HP - 50 HZ - 110/220v - Single Phase - 1500 RPM	14.9	6.8	
420265	1.5 HP - 50 HZ - 110/220v - Single Phase - 1500 RPM	16.9	7.7	
420268	.75 HP - 50 HZ - 220/380v - 3-Phase - 1500 RPM	12.3	5.6	
420269	1.0 HP - 50 HZ - 220/380v - 3-Phase - 1500 RPM	27.7	12.6	

MOTORS FOR 90 OR 120 FPM CHAIN SPEED

CATALOG NUMBER	ITEM DESCRIPTION	SHIP WEIGHT LBS.	SHIP WEIGHT KGS.	LIST PRICE
420246	.75 HP - 60 HZ - 115/208-230v - Single Phase - 3460 RPM	0.0	0.0	
420245	1.0 HP - 60 HZ - 115/208-230v - Single Phase - 3460 RPM	30.1	13.7	
420260	1.5 HP - 60 HZ - 115/208-230v - Single Phase - 3600 RPM	34.5	15.7	
420283	2.0 HP - 60 HZ - 115/208-230v - Single Phase - 3460 RPM	42.0	19.1	
420256	.75 HP - 60 HZ - 208-230/460v - 3-Phase - 3450 RPM	11.8	5.4	
420258	1.0 HP - 60 HZ - 208-230/460v - 3-Phase - 3600 RPM	11.8	5.4	
420262	1.5 HP - 60 HZ - 208-230/460v - 3-Phase - 3600 RPM	32.0	14.6	
420262	1.5 HP - 50 HZ - 190/380v - 3-Phase - 3000 RPM	32.0	14.6	
420284	2.0 HP - 60 HZ - 230/460v - 3-Phase - 3600 RPM	43.0	19.6	
	NOT AVAILABLE - 50HZ Single Phase Motors 2850 RPM USE 60 FPM CHAIN SPEED	NOT AVAILABLE		
420297	.75 HP - 50 HZ - 220/380v - 3-Phase - 3000 RPM	12.0	5.5	
420298	1.0 HP - 50 HZ - 220/380v - 3-Phase - 3000 RPM	12.0	5.5	
420262	1.5 HP - 60 HZ - 208-230/460v - 3-Phase - 3600 RPM	32.0	14.6	
420262	1.5 HP - 50 HZ - 190/380v - 3-Phase - 3000 RPM	32.0	14.6	

Toll-free: 1-800-99VALCO
Phone: (+1) 419-678-8731
Fax: (+1) 419-678-2200

FLAT CHAIN SYSTEM COMPONENTS

PLATFORM SCALE ACCESSORIES

CATALOG #	ITEM DESCRIPTION	SHIP WEIGHT LBS.	SHIP WEIGHT KG.	LIST PRICE
415449	Platform Scale Control With Magnetic Cutoff Controls Fill System - 240v 60/50hz	10.0	4.5	
415526	Set of Extension Legs for Platform Scale Lifts Scale Off Floor for Easy Cleaning	0.0	0.0	
415448	Mount Rail Bridge Kit - for Suspended Model Hoppers	30.0	13.6	
415525	Mount Rail Bridge Kit - for Floor Model Hoppers	14.5	6.6	
421990	Adapter Plate for Flat Chain Hopper and Spinks Scale	9.0	4.1	

WEIGH HOPPER & EXTENSION

CATALOG #	ITEM DESCRIPTION	SHIP WEIGHT LBS.	SHIP WEIGHT KG.	LIST PRICE
410509	1,400 lb. (635 kg.) Galvanized Weigh Hopper Includes Legs and Slide Gate	165.0	74.8	
411033	Weigh Hopper Extension Leg 4 needed for 410509 Weigh Hopper	1.8	0.8	
410510	400 lb. (180 kg.) Galvanized Extension for 410509 Weigh Hopper	30.0	13.6	
415528	Lower Boot / Unloader Adapter Allows for Attachment of a Lower Boot/Unloader Directly to the 410509 Hopper (no plastic upper transition required)	25.0	11.3	

Toll-free: 1-800-99VALCO
Phone: (+1) 419-678-8731
Fax: (+1) 419-678-2200

FLAT CHAIN SYSTEM COMPONENTS

CORNERS & ACCESSORIES

CATALOG #	ITEM DESCRIPTION	SHIP WEIGHT LBS.	SHIP WEIGHT KG.	LIST PRICE
430091	Universal Corner, Suspended or Floor (without Floor Stand)	13.3	6.0	
430091-Q228	Universal Corner, Suspended or Floor (without Floor Stand) - Skid Qty	3,100.0	1,406.2	
480300	Universal Corner with Oiler, Suspended or Floor (without Floor Stand)	13.3	6.0	
610893	Corner Oil Cup	0.1	0.0	
611727	Corner Oil Cup Wick	0.0	0.0	
410028	Floor Corner - with Painted Floor Stand	15.0	6.8	
410371	Floor Stand Only for Corner - Painted	2.2	1.0	
411048	Floor Stand Only for Corner - Stainless Steel	2.4	1.1	
410597	VAL-CO Corner Chick Guard for Pullet Trough*	0.4	0.2	
410598	VAL-CO Corner Chick Guard for Hen Trough*	0.5	0.2	

* Set corner chick guard height high enough to prevent feed build-up and low enough to not allow a chick to get under.
Helps to minimize the chances of chicks getting entangled in feed corners, but cannot prevent chicks from injury if chain is running while birds have access to the chain feeding system.

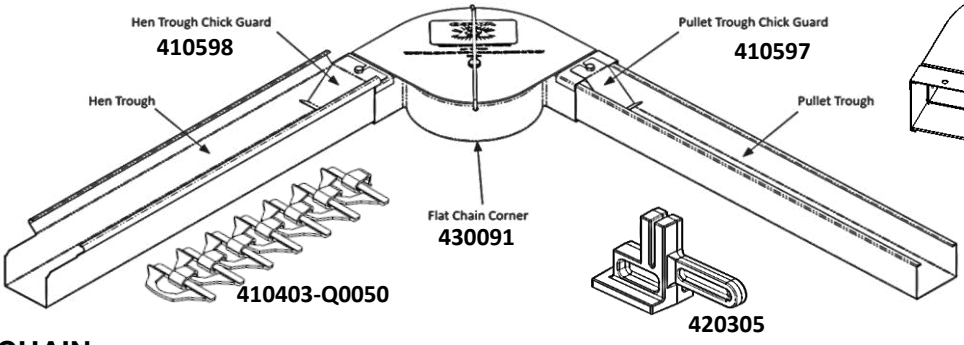

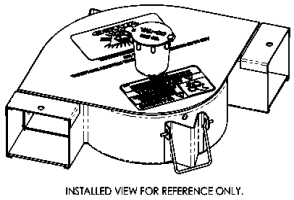

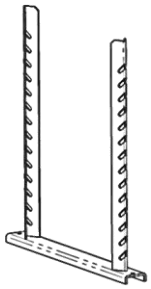

CHAIN

410403-Q0050	2.75" Flat Chain - (50) Foot	35.9	16.3	
410403-Q5400	2.75" Flat Chain - Skid Quantity of 5400 ft	3,880.0	1,760.0	
410403-Q59400	2.75" Flat Chain - Truckload Quanity of 59,400 ft	42,680.0	19,359.6	
420305	Flat Chain Breaker	3.4	1.5	

PAN FEEDER OPTIONS FOR ATTACHMENT TO TROUGH

455180	Hen Feeder for Chain Trough attachment. Includes all hardware.	3.8	1.7	
455160	PXR Rooster Feeder - 8 Spoke Wire Grill - 0 to 3 lb. (1.36kg) adjustable capacity; slide shut off; designed to mount on chain feeder with all necessary hardware. **Includes 450594 feed restrictor.**	4.8	2.2	

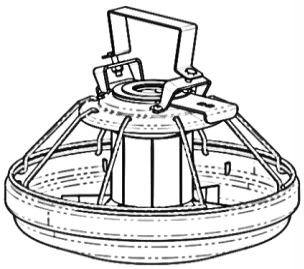
455180

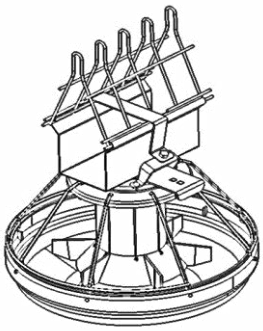

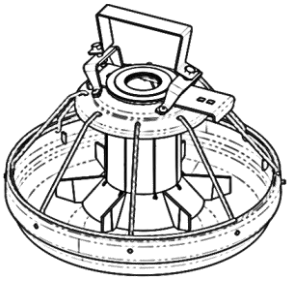
455160

Toll-free: 1-800-99VALCO
Phone: (+1) 419-678-8731
Fax: (+1) 419-678-2200

HEN TROUGH & ACCESSORIES

HEN TROUGH (MEDIUM WIDE) - COUPLERS - SUPPORT

CATALOG #	ITEM DESCRIPTION	SHIP WEIGHT LBS.	SHIP WEIGHT KG.	LIST PRICE
410300	10' Hen Trough	18.0	8.2	
410308	12' Hen Trough	21.3	9.7	
410329	8" Hen Trough Coupler - With Hanger	1.8	0.8	
410328	8" Hen Trough Coupler - Less Hanger	1.5	0.7	
410465	Wire Hanger for Hen Trough Coupler	0.2	0.1	
410488	Hi-Pro Wire Hanger for Hen Trough	0.2	0.1	
630297	1 Piece Hen Trough Hanger Bracket with 3 Perch Tube Holes	3.4	1.6	
630291	2 Piece Hen Trough Hanger Kit with 1.25" Dia. Hole for 1.163" Perch Pipe	0.9	0.4	
630295	Floor Trough Support with 3 Perch Holes (1.375" Holes for Perch Pipe)	5.1	2.31	
630270	Floor Trough Support with 3 Perch Holes - Sloped Floors	6.9	3.13	
411036	Heavy Duty "J" Hanger	0.7	0.3	
410070	Trough Clean-Out Cover - includes 4 Wing Nuts	1.7	0.8	
610544	Trough Clean-Out Cover - includes 2 Wing Nuts	0.7	0.3	

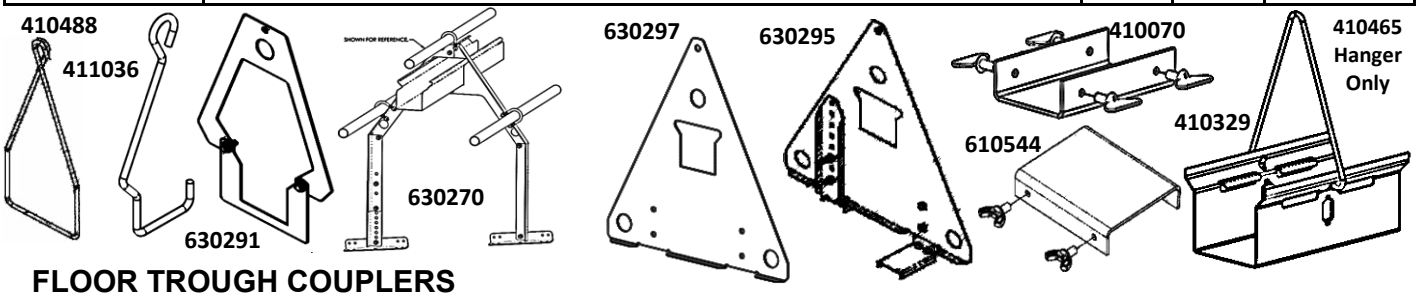

FLOOR TROUGH COUPLERS

420318	8" Floor Trough Coupler with Painted Floor Stand	3.9	1.8	
420320	8" Floor Trough Coupler Less Stand	2.9	1.3	
410361	Floor Stand Only for Floor Trough Coupler - Painted	2.3	1.0	
411048	Floor Stand Only for Floor Trough Coupler - Stainless Steel	2.4	1.1	
410664	Floor Stand Only for Floor Trough Coupler - Plastic*	0.7	0.3	

* Not for use in Perching Applications

HEN PERCH SUPPORT ACCESSORIES

630295	Floor Trough Support with 3 Perch Holes (1.375" Holes for Perch Pipe)	5.1	2.31	
631233	End Plug Tube Cap	0.0	0.00	
630429	Perch Hanger Hen Trough 1.163" Tube	0.8	0.34	
630430	Perch Support Hen Trough 1.163" Tube	0.2	0.08	
630431	Strap for 1.163" Tube	0.0	0.01	
690142	Screw for Strap (2 required per strap)	0.0	0.00	
631865	1.25" OD x 20' 14GA Pipe with Holes	17.8	8.07	
631811	1.25" Dia Pipe Coupler Kit	0.7	0.33	
631812	1.25" OD pipe Plug	0.0	0.01	

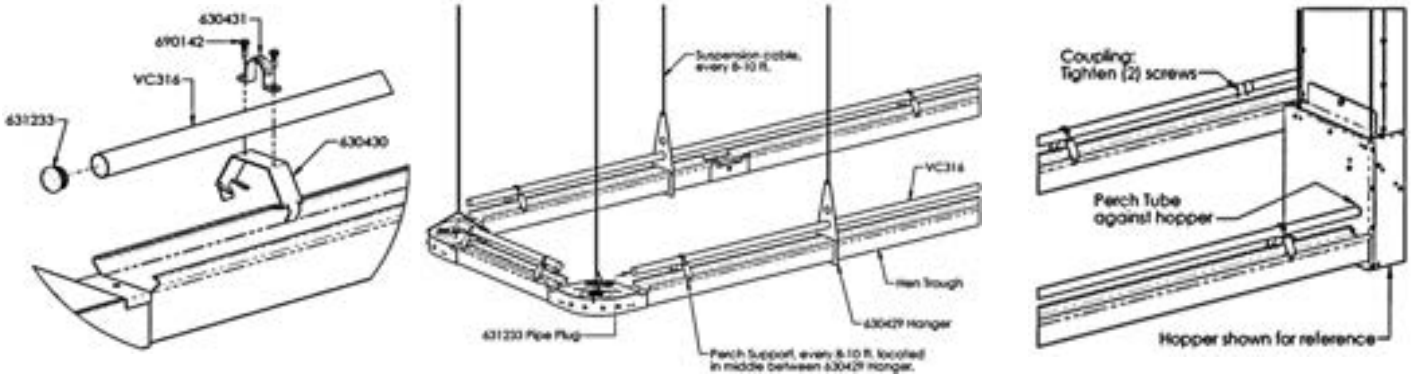

Toll-free: 1-800-99VALCO
Phone: (+1) 419-678-8731
Fax: (+1) 419-678-2200

PULLET TROUGH & ACCESSORIES

PULLET TROUGH (REGULAR) - COUPLERS - HANGERS

CATALOG #	ITEM DESCRIPTION	SHIP WEIGHT LBS.	SHIP WEIGHT KG.	LIST PRICE
410310	10' Pullet Trough	15.4	7.0	
410322	12' Pullet Trough	18.5	8.4	
410378	8" Pullet Trough Coupler - With Hanger	1.9	0.9	
410377	8" Pullet Trough Coupler - Less Hanger	1.2	0.5	
410467	Hanger for Pullet Trough Coupler	0.1	0.0	
410466	Intermediate Hanger for Pullet Trough	0.2	0.1	
411036	Heavy Duty "J" Hanger	0.7	0.3	
410070	Trough Clean-Out Cover - includes 4 Wing Nuts	1.7	0.8	
610544	Trough Clean-Out Cover - includes 2 Wing Nuts	0.7	0.3	
410084	10' Trough Cover	6.0	2.7	
410085	12' Trough Cover	6.6	3.0	
631865	1.25" OD x 20' 14GA Pipe with Holes	17.8	8.1	
631811	1.25" Dia Pipe Coupler Kit	0.7	0.3	
631812	1.25" OD pipe Plug	0.0	0.0	

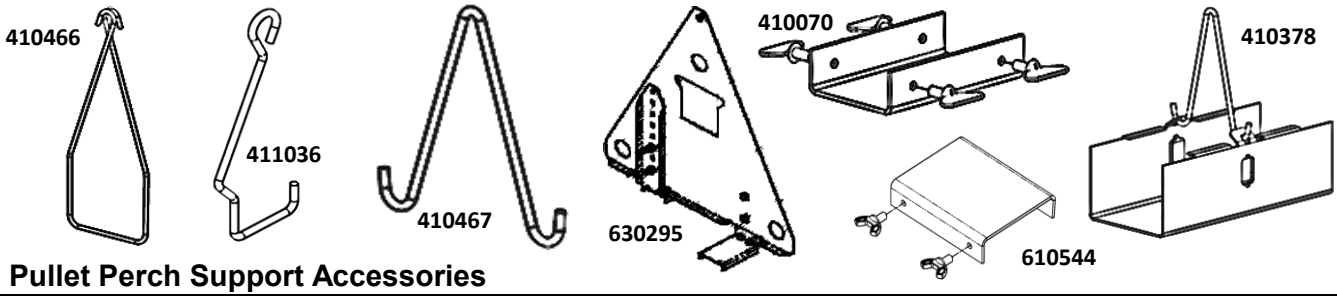

Pullet Perch Support Accessories

631233	End Plug Tube Cap	0.0	0.00	
420089	Perch Hanger Pullet Trough 1.163" Tube	0.7	0.33	
631441	Perch Support Pullet Trough 1.163" Tube	0.2	0.09	
630431	Strap for 1.163" Tube	0.0	0.01	
690142	Screw for Strap (2 required per strap)	0.0	0.00	

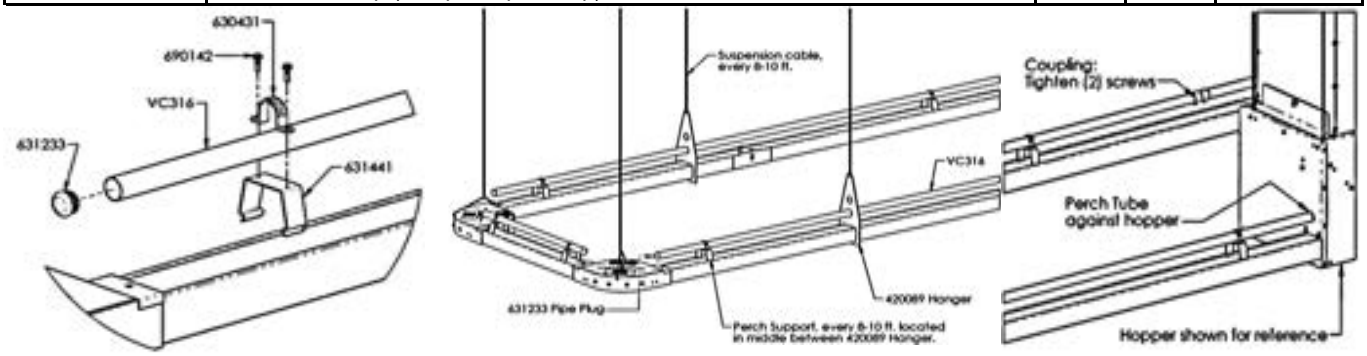

Floor Trough Couplers

410361	Floor Stand Only for Floor Trough Coupler - Painted	2.3	0.5	
410664	Floor Stand Only for Floor Trough Coupler - Plastic*	0.7	0.3	
411048	Floor Stand Only for Floor Trough Coupler - Stainless Steel	2.4	1.1	
420318	8" Floor Trough Coupler with Painted Floor Stand	3.9	1.8	
420320	8" Floor Trough Coupler Less Stand	2.9	1.3	

* Not for use in Perching Applications

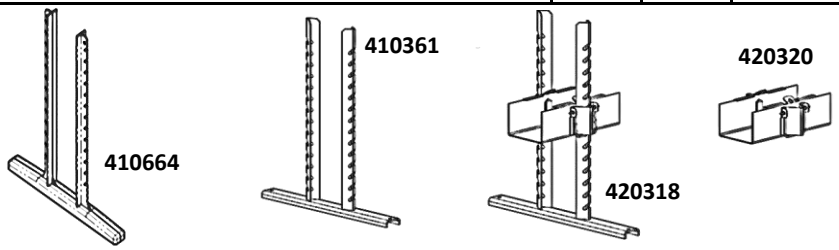

Toll-free: 1-800-99VALCO
Phone: (+1) 419-678-8731
Fax: (+1) 419-678-2200

Notes Regarding Selection of Short Trough Sections

Choose the below part numbers for shorter length hen and pullet troughs. These can be used at the ends of lines and will come with factory cut ends for ease of installation. Choose the short trough part number according to what outside of trough dimension and hen or pullet trough. Be careful to consider hopper placement. Some hoppers cannot be placed directly opposite from each other depending on the trough outside dimension. Reference below recomendations. If hoppers cannot be placed directly opposite, they can fit if offset from one another.

3 ft. outside: 1 line suspended hoppers will fit opposite each other with gap between. 2 line & 4 line suspended hoppers will not. All floor hoppers will not.

4 ft. outside: 1 line & 2 line suspended hoppers will fit opposite each other with gap between. 4 line suspended will not. All floor hoppers will not.

5 ft. outside: All suspended hoppers will fit opposite each other. All floor hoppers will not.

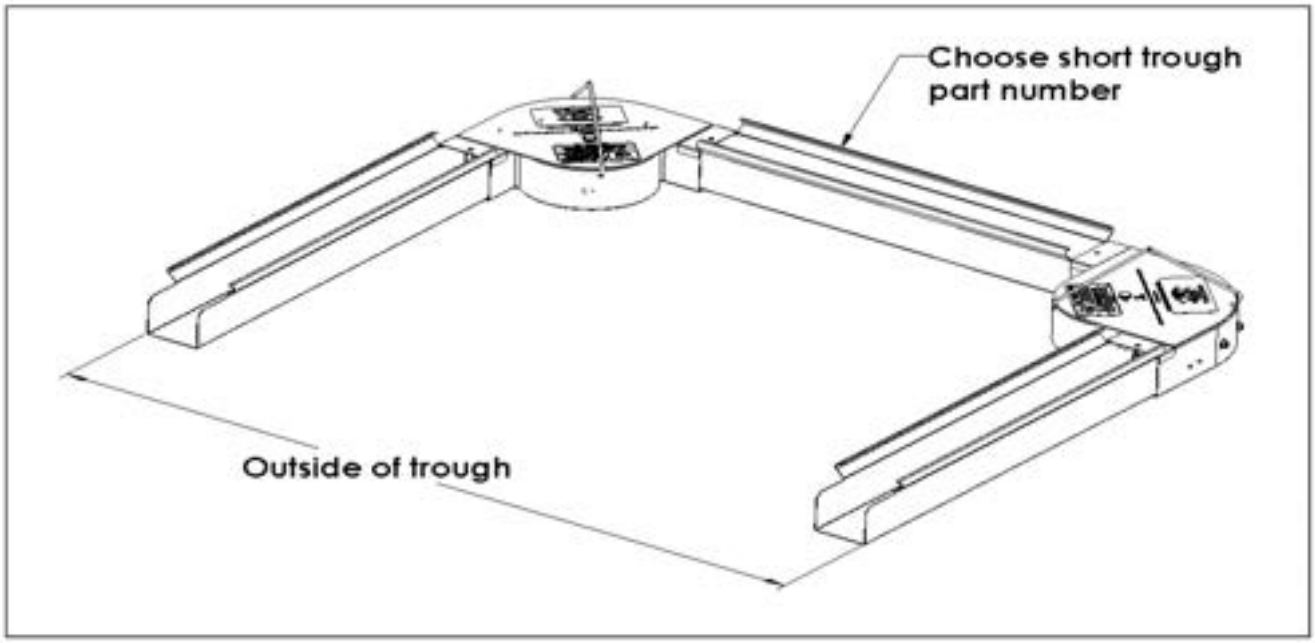

New Hen # Description

420326 Hen trough, for 4 ft. outside of trough dimension (29.75 in. long)
420327 Hen trough, for 5 ft. outside of trough dimension (41.75 in. long)

New pullet #

420328 Pullet trough, for 3 ft. outside of trough dimension (17.75 in. long)
420329 Pullet trough, for 4 ft. outside of trough dimension (29.75 in. long)
420330 Pullet trough, for 5 ft. outside of trough dimension (41.75 in. long)

SHORT HEN TROUGH SECTIONS

CATALOG #	ITEM DESCRIPTION	SHIP WEIGHT LBS.	SHIP WEIGHT KG.	LIST PRICE
420326	Hen Trough, for 4' outside of tough dimension. 29.75" (75.6cm)	4.3	2.0	
420327	Hen Trough, for 5' outside of trough dimension, 41.75" (106.0cm)	6.2	2.8	

SHORT PULLET TROUGH SECTIONS

CATALOG #	ITEM DESCRIPTION	SHIP WEIGHT LBS.	SHIP WEIGHT KG.	LIST PRICE
420328	Pullet Trough for 3' outside of trough dimension. 17.75" (45.1cm)	2.2	1.0	
420329	Pullet Trough for 4' outside of trough dimension. 29.75" (75.6cm)	3.7	1.7	
420330	Pullet Trough for 5' outside of trough dimension. 41.75" (106.0cm)	5.2	2.4	

Toll-free: 1-800-99VALCO
Phone: (+1) 419-678-8731
Fax: (+1) 419-678-2200

WIRE GRILL
FOR HEN & PULLET TROUGH

A
REGULAR PROFILE

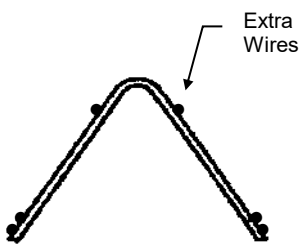

See
REGULAR PROFILE
Grills on
Pages 14-17 & 14-18

B
HI-PRO PROFILE

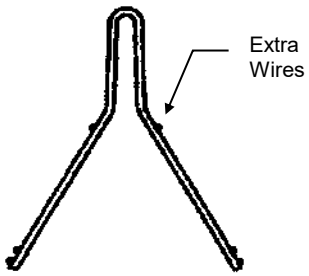

See
HI-PRO PROFILE
Grills on
Page 14-19

C
HI-V PROFILE

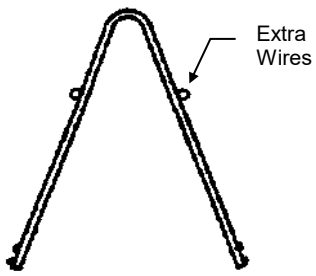

See
HI-V PROFILE
Grills on
Page 14-20

GRILL END CAPS

CATALOG NUMBER	ITEM DESCRIPTION	SHIP WEIGHT LBS.	SHIP WEIGHT KGS	LIST PRICE
410484	End Cap for Regular Profile Hen Trough Grills	0.11	0.05	
410394	End Cap for Hi-Pro Profile Hen Trough Grills	0.10	0.05	
410399	End Cap for H-V Profile Hen Trough Grills	0.12	0.05	
410690	End Cap for H-V Profile Pullet Trough Grills	0.13	0.06	
410485	End Cap for Regular Profile Pullet Trough Grills	0.07	0.03	

Toll-free: 1-800-99VALCO
Phone: (+1) 419-678-8731
Fax: (+1) 419-678-2200

WIRE GRILL - REGULAR PROFILE

IMPORTANT NOTE

All flat chain wire grills are special production - extended lead time possible on some sizes.
A special production net charge of $150 (subject to change) will apply on any order of less than 300 pieces.
Orders for these special production grills may not be cancelled or ship date delayed.

A
REGULAR PROFILE

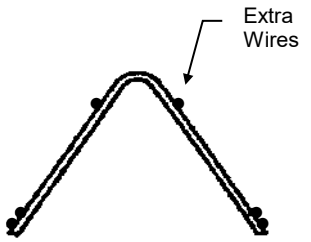

REGULAR PROFILE GRILL

CATALOG NUMBER	OVERALL LENGTH	TROUGH TYPE	HORIZONTAL SPACING		EXTRA WIRES	VERT SPACING		SHIP WEIGHT		LIST PRICE
			IN	MM		IN	MM	LBS.	KGS	
410470	5	HT	1.625	41.3	0	0.000	0.0	2.6	1.2	
410471	6	HT	1.625	41.3	0	0.000	0.0	3.1	1.4	
410478	5	PT	1.625	41.3	0	0.000	0.0	2.4	1.1	
410479	6	PT	1.625	41.3	0	0.000	0.0	3.1	1.4	
415204	5	HT	1.625	41.3	1	3.312	84.1	2.8	1.3	
415205	6	HT	1.625	41.3	1	3.312	84.1	3.4	1.5	
415157	5	HT	1.625	41.3	2	2.250	57.2	3.0	1.4	
415158	6	HT	1.625	41.3	2	2.250	57.2	3.6	1.6	
416097	5	PT	1.625	41.3	2	2.250	57.2	3.1	1.4	
416098	6	PT	1.625	41.3	2	2.250	57.2	4.7	2.1	
415420	5	HT	1.688	42.9	0	0.000	0.0	2.5	1.1	
415421	6	HT	1.688	42.9	0	0.000	0.0	3.0	1.4	
415422	5	PT	1.688	42.9	0	0.000	0.0	2.3	1.1	
415423	6	PT	1.688	42.9	0	0.000	0.0	3.0	1.4	
415210	5	HT	1.688	42.9	1	3.312	84.1	2.6	1.2	
415211	6	HT	1.688	42.9	1	3.312	84.1	4.0	1.8	
420643	5	HT	1.688	42.9	2	2.250	57.2	3.1	1.4	
420644	6	HT	1.688	42.9	2	2.250	57.2	3.6	1.6	
415159	5	HT	1.688	42.9	2	2.500	63.5	3.0	1.3	
415160	6	HT	1.688	42.9	2	2.500	63.5	3.5	1.6	

Note: When one extra wire is specified, that wire will be at the apex of the grill with no choice of vertical spacing.

REGULAR PROFILE GRILL LISTING CONTINUED ON NEXT PAGE →

Toll-free: 1-800-99VALCO
Phone: (+1) 419-678-8731
Fax: (+1) 419-678-2200

WIRE GRILL - REGULAR PROFILE

IMPORTANT NOTE

All flat chain wire grills are special production - extended lead time possible on some sizes.
A special production net charge of $150 (subject to change) will apply on any order of less than 300 pieces.
Orders for these special production grills may not be cancelled or ship date delayed.

REGULAR PROFILE GRILL (SEE FIGURE "A" ON PAGE 14-16)

CATALOG NUMBER	OVERALL LENGTH	TROUGH TYPE	HORIZONTAL SPACING		EXTRA WIRES	VERT SPACING		SHIP WEIGHT		LIST PRICE
			IN	MM		IN	MM	LBS.	KGS	
420490	5	HT	1.750	44.5	0	0.000	0.0	2.4	1.1	
420488	6	HT	1.750	44.5	0	0.000	0.0	3.2	1.5	
420501	5	PT	1.750	44.5	0	0.000	0.0	2.5	1.1	
420502	6	PT	1.750	44.5	0	0.000	0.0	3.2	1.5	
415206	5	HT	1.750	44.5	2	2.250	57.2	2.9	1.3	
415207	6	HT	1.750	44.5	2	2.250	57.2	3.4	1.5	
415217	5	PT	1.750	44.5	2	2.250	57.2	3.0	1.4	
415218	6	PT	1.750	44.5	2	2.250	57.2	3.5	1.6	
420683	5	HT	1.750	44.5	2	2.500	63.5	3.0	1.3	
420684	6	HT	1.750	44.5	2	2.500	63.5	4.1	1.9	
415215	5	HT	1.750	44.5	2	2.559	65.0	3.0	1.3	
415216	6	HT	1.750	44.5	2	2.559	65.0	3.6	1.6	
415142	5	HT	1.770	45.0	2	2.756	70.0	3.0	1.3	
415143	6	HT	1.770	45.0	2	2.756	70.0	3.6	1.6	
420504	5	HT	1.890	48.0	0	0.000	0.0	2.5	1.1	
420505	6	HT	1.890	48.0	0	0.000	0.0	3.2	1.5	
420649	5	PT	1.890	48.0	2	2.250	57.2	3.0	1.4	CALL
420676	6	PT	1.890	48.0	2	2.250	57.2	0.0	0.0	
420645	5	HT	1.890	48.0	2	2.559	65.0	3.0	1.3	
420646	6	HT	1.890	48.0	2	2.559	65.0	3.5	1.6	
410472	5	HT	2.500	63.5	0	0.000	000	2.0	0.9	
410473	6	HT	2.500	63.5	0	0.000	000	2.6	1.2	
410474	5	Pullet	2.500	63.5	0	0.000	000	2.0	0.9	
410475	6	Pullet	2.500	63.5	0	0.000	000	2.6	1.2	
415140	5	HT	2.500	63.5	1	3.312	84.1	2.7	1.2	
415141	6	HT	2.500	63.5	1	3.312	84.1	3.3	1.5	
410923	5	HT	2.500	63.5	2	2.250	57.2	2.7	1.2	
410924	6	HT	2.500	63.5	2	2.250	57.2	3.5	1.6	
415208	5	HT	2.500	63.5	2	2.470	62.7	2.7	1.2	
415209	6	HT	2.500	63.5	2	2.470	62.7	3.5	1.6	

Note: When one extra wire is specified, that wire will be at the apex of the grill with no choice of vertical spacing.

Toll-free: 1-800-99VALCO
Phone: (+1) 419-678-8731
Fax: (+1) 419-678-2200

WIRE GRILL - HI-PRO PROFILE

IMPORTANT NOTE

All flat chain wire grills are special production - extended lead time possible on some sizes.
A special production net charge of $150 (subject to change) will apply on any order of less than 300 pieces.
Orders for these special production grills may not be cancelled or ship date delayed.

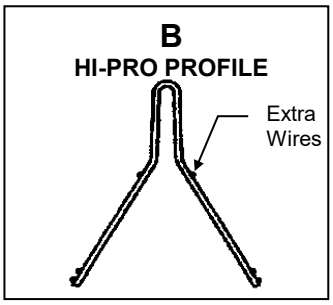

HI-PRO PROFILE GRILL

CATALOG NUMBER	OVERALL LENGTH	TROUGH TYPE	HORIZONTAL SPACING		EXTRA WIRES	VERT SPACING		SHIP WEIGHT		LIST PRICE
			IN	MM		IN	MM	LBS.	KGS	
420544	4	HT	1.625	41.3	2	2.250	57.2	3.1	1.4	
420542	5	HT	1.625	41.3	2	2.250	57.2	3.9	1.8	
420543	6	HT	1.625	41.3	2	2.250	57.2	3.9	1.8	
420547	5	HT	1.625	41.3	2	2.500	63.5	4.0	1.8	
420548	6	HT	1.625	41.3	2	2.500	63.5	4.7	2.1	
420687	5	HT	1.625	41.3	2	2.625	66.7	4.0	1.8	
420688	6	HT	1.625	41.3	2	2.625	66.7	4.7	2.1	
410205	5	HT	1.625	41.3	2	3.102	78.8	3.1	1.4	
410206	6	HT	1.625	41.3	2	3.102	78.8	5.9	2.7	
420691	5	HT	1.688	42.9	2	2.250	57.2	3.8	1.7	
420692	6	HT	1.688	42.9	2	2.250	57.2	5.3	2.4	
420633	5	HT	1.688	42.9	2	2.502	63.6	4.0	1.8	
420634	6	HT	1.688	42.9	2	2.502	63.6	3.8	1.7	
420689	5	HT	1.688	42.9	2	2.625	66.7	4.0	1.8	
420690	6	HT	1.688	42.9	2	2.625	66.7	0.0	0.0	
410480	5	HT	1.688	42.9	2	3.102	78.8	3.8	1.7	
410481	6	HT	1.688	42.9	2	3.102	78.8	4.9	2.2	
415136	6	HT	1.732	44.0	2	2.500	63.5	4.1	1.9	
410609	5	HT	1.732	44.0	2	3.102	78.8	3.8	1.7	
410608	6	HT	1.732	44.0	2	3.102	78.8	4.6	2.1	
415219	5	HT	1.750	44.5	2	2.250	57.2	3.6	1.6	
415220	6	HT	1.750	44.5	2	2.250	57.2	4.7	2.1	
415125	5	HT	1.750	44.5	2	2.500	63.5	4.0	1.8	
420685	5	HT	1.813	46.1	2	2.313	58.7	3.8	1.7	
420686	6	HT	1.813	46.1	2	2.313	58.7	0.0	2.1	
420535	6	HT	1.813	46.1	2	2.500	63.5	4.5	2.1	
420537	5	HT	1.813	46.1	2	2.500	63.5	3.7	1.7	
415212	5	HT	2.000	50.8	2	2.352	59.7	3.6	1.6	
415177	5	HT	2.000	50.8	2	2.000	50.8	3.6	1.6	
415178	6	HT	2.000	50.8	2	2.000	50.8	4.3	2.0	
415179	5	HT	2.000	50.8	2	1.688	42.9	3.6	1.6	
415180	6	HT	2.000	50.8	2	1.688	42.9	4.3	2.0	

Toll-free: 1-800-99VALCO
Phone: (+1) 419-678-8731
Fax: (+1) 419-678-2200

WIRE GRILL - HI-V PROFILE

IMPORTANT NOTE

All flat chain wire grills are special production - extended lead time possible on some sizes.
A special production net charge of $150 (subject to change) will apply on any order of less than 300 pieces.
Orders for these special production grills may not be cancelled or ship date delayed.

C
HI-V PROFILE

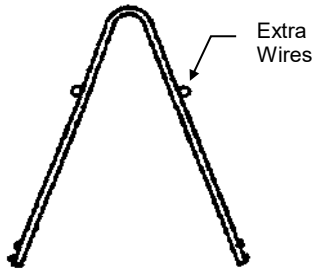

HI-V PROFILE GRILL

CATALOG NUMBER	OVERALL LENGTH	TROUGH TYPE	HORIZONTAL SPACING		EXTRA WIRES	VERT SPACING		SHIP WEIGHT		LIST PRICE
			IN	MM		IN	MM	LBS.	KGS	
420679	5	HT	1.625	41.3	2	2.625	66.7	4.0	1.8	
420680	6	HT	1.625	41.3	2	2.625	66.7	0.0	0.0	
410668	6	HT	1.625	41.3	2	2.932	74.5	4.7	2.1	
415213	5	Hen	1.625	41.3	2	3.102	78.8	4.0	1.8	
415214	6	Hen	1.625	41.3	2	3.102	78.8	3.3	1.5	
410395	5	Hen	1.688	42.9	2	3.102	78.8	3.8	1.7	
410398	6	Hen	1.688	42.9	2	3.102	78.8	4.7	2.1	
410290	5	PT	1.688	42.9	2	3.102	78.8	3.8	1.7	
410291	6	PT	1.688	42.9	2	3.102	78.8	4.6	2.1	
420681	5	HT	1.732	44.0	2	3.102	78.8	3.8	1.7	
420682	6	HT	1.732	44.0	2	3.102	78.8	0.0	0.0	
415166	5	HT	1.770	45.0	2	2.362	60.0	3.5	1.6	
415167	6	HT	1.770	45.0	2	2.362	60.0	3.5	1.6	
416107	5	HT	1.770	45.0	2	2.560	60.0	3.8	1.7	
416108	6	HT	1.770	45.0	2	2.560	60.0	4.4	2.0	
415175	5	HT	1.850	47.0	2	2.362	60.0	3.7	1.7	
415176	6	HT	1.850	47.0	2	2.362	60.0	4.4	2.0	
420506	5	HT	2.500	63.5	2	3.102	78.8	3.8	1.7	
420507	6	HT	2.500	63.5	2	3.102	78.8	4.6	2.1	

Toll-free: 1-800-99VALCO
Phone: (+1) 419-678-8731
Fax: (+1) 419-678-2200

Narrow Loop Flat Chain Feeders

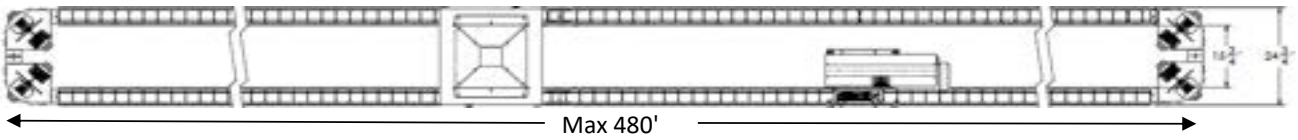

2-WAY DIRECT DRIVE NARROW LOOP FEEDERS - 120 FPM - MAX LENGTH 480'

CATALOG #	ITEM DESCRIPTION	SHIP WEIGHT LBS.	SHIP WEIGHT KGS.	LIST PRICE
421960	1-Line Suspended Model Auxiliary Fill Hopper - 60 Lb. (27Kg) Hopper Capacity - Galvanized Construction - Includes (2) 420335 - Extension Hopper Available Below	68.0	30.8	
421970	Flat Chain Large Cap Extension Hopper 350 Lb Capacity	61.5	27.9	
420900	Lo Pro Extension Hopper with Cover- 155 Lb Capacity	34.0	15.4	
430091	90 Deg Corner Suspended/ Floor	13.3	6.0	
410300	10' Hen Trough	18.0	8.2	
410308	12' Hen Trough	21.3	9.7	
410328	8" Ht Coupler Less Hanger	1.5	0.7	
411036	Open Wire Hanger, Flat Chain	0.7	0.3	
410403-Q0050	2.75" Flat Chain (50Ft)	35.9	16.3	
410403-Q5400	2.75" Flat Chain (Skid Of 5400Ft)	3,880.0	1,760.0	
410403-Q59400	2.75" Flat Chain - Truckload Quanity of 59,400 ft	42,680.0	19,359.6	
420305	Flat Chain Breaker	3.4	1.5	
416113	Grill 5-HP-HT-250-1-144-FE 1 Side Restricted	2.9	1.3	
416114	Grill 6-HP-HT-250-1-144-FE 1 Side Restricted	3.5	1.6	
410394	End Cap For High-Pro Profile Grill	0.1	0.0	
411071	Trough Spacer (requires ording (2) - 010615 & (2) 012792 for each 411071	1.0	0.5	
420335	Pullet Trough, 5.5", Narrow Loop Flat Chain	0.7	0.3	
410070	Trough Clean-Out Cover - Includes 4 Wing Nuts	1.7	0.8	
610544	Trough Clean-Out Cover - Includes 2 Wing Nuts	0.7	0.3	
421980	Narrow Straight Line Winch Assembly, 800Nm, 1PH, 240V, 60H, 3.1 RPM	80.0	36.3	
922330	Narrow Winch Controller - 220-240 VAC 50/60Hz (1 per Winch)	2.9	1.3	

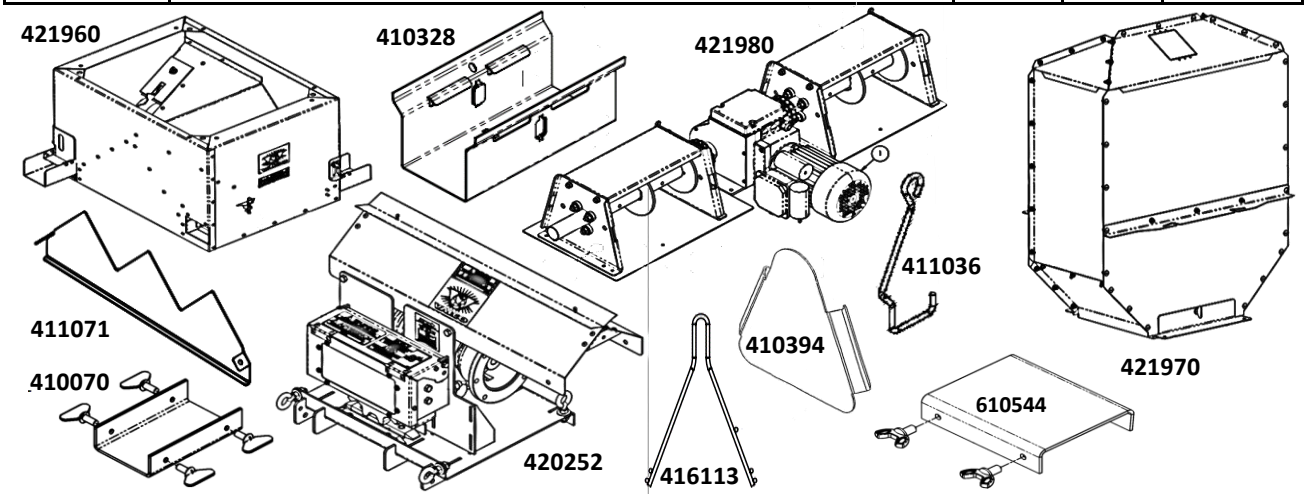

TO ORDER A COMPLETE NARROW LOOP FEEDER:

1.Order (1) hopper and (4) corners (and extension hopper if desired)
2.Select desired length of hen trough, chain, and choice of grill (max 480' total length - 964' of chain length), couplers, grill caps, and hangers
3.See page 14-03 for hp recommendations. Order direct drive(s) (see page 14-09) and motor(s) (see pages 14-03 and 14-10) based on those recommendations.
In situations where the chain could be running while the system is lowered, a 120 FPM chain speed will help distribute the feed more evenly around the system.
4.Order winching and suspension cable as needed, supporting as per hen standard hen trough
Industry Standard for Male Breeders is 7 linear inches of trough space per bird.
Minimum recommended feed is 1.2 lb (.45 kg) for every 1' (0.3 m) of length of system or 2' (0.6 m) of trough. For example, for a 360' (110 m) long system, a minimum of 430 lbs (114 kg) of feed is recommended to ensure feed will get around the entire system.
5.Order (1) 411071 trough spacer, (2) 010615 bolts, and (2) 012792 nuts for every 30' of total length of system.

Toll-free: 1-800-99VALCO
Phone: (+1) 419-678-8731
Fax: (+1) 419-678-2200

Manual Feed Troughs

How to Order

1. Order 2 420980
2. Overall length divided by 10' or 12' to get the number of trough pieces.
3. Order 1 420980 & 420992 for every trough piece ordered

Manual Feed Troughs

CATALOG #	ITEM DESCRIPTION	SHIP WEIGHT LBS.	SHIP WEIGHT KGS.	LIST PRICE
410300	10' Hen Trough	18.0	8.2	
416113	Grill - 5' restricted on 1 side - Need 2 for 10' Trough	2.9	1.3	
410308	12' Hen Trough	21.3	9.7	
416114	Grill - 6' restricted on 1 side - Need 2 for 12' Trough	3.5	1.6	
420980	Manual Feed Trough Stand	21.0	9.5	
420992	Trough Bracket	1.3	0.6	
450437	Spring for Anti-Roost Shocker Wire	0.1	0.1	
VG342	1/16" Anti-Roost Wire	0.0	0.0	
VC353	1/16" Clamp for Anti-Roost Wire	0.0	0.0	

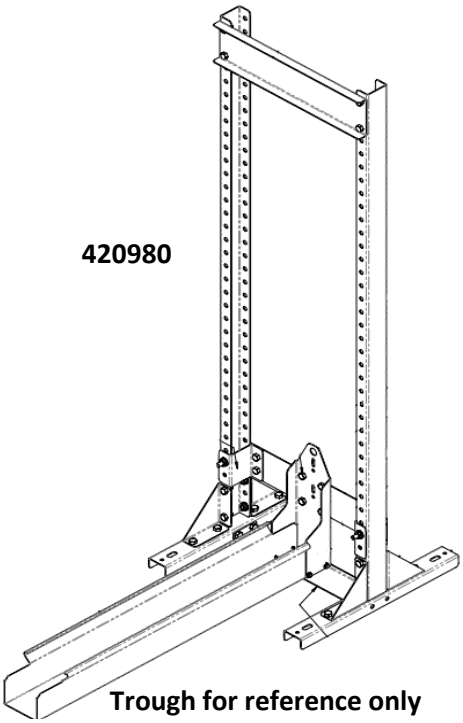

420980

Trough for reference only

416115 / 416116

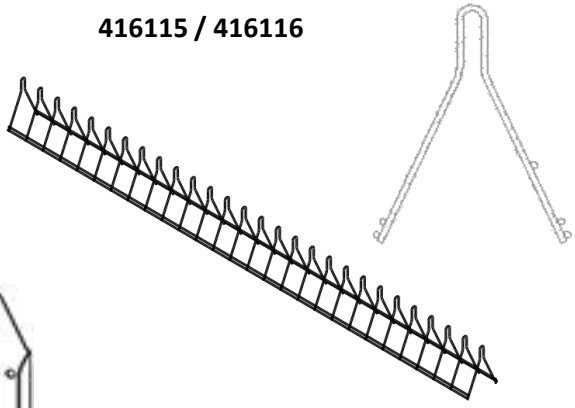

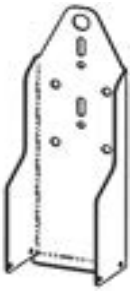

420922

SECTION 15
BROILER AND PULLET PAN FEEDER

IN THIS CATALOG SECTION

PAGE NUMBER	CONTENTS
15-02	How to Place a Broiler and Pullet Pan Feeder Order
15-03 & 15-04	Control Pans - Fuze ProLine & Fuze Feeders
15-05	Control Pans - Other Feeders
15-06	Direct Drive Motor & Gearbox Units
15-07	Boots & Feed Hoppers
15-08	Feeders - Fuze ProLine & Fuze Feeders with and without shutoffs
15-09	Fuze V Pan Feeders & Fuze V Control Pan Feeders
15-10	Short Top Pan Feeders / PX Feeders / Repair Parts
15-11	Parts and Accessories
15-12 & 15-13	Best Start Chick Feeders - Ultra Start™ - Clean Start™ - Feed Trays
15-14	Feed Tubes Smooth - Tube Clamp - Hangers
15-15	Feed Tubes Ribbed - Tube Clamp - Hangers
15-16	Auger
15-17	Feed Line Component Requirements 2/3/4 Pans per 9' Tube - Single Boot / End Fill
15-18	Feed Line Component Requirements 2/3/4 Pans per 9' Tube - Double Boot / Center Fill
15-19	Feed Line Component Requirements 2/3/4 Pans per 10' Tube - Single Boot / End Fill
15-20	Feed Line Component Requirements 2/3/4 Pans per 10' Tube - Double Boot / Center Fill

REPAIRS

SEE REPAIR LISTING IN SEPARATE CATALOG

Toll-free: 1-800-99VALCO
Phone: (+1) 419-678-8731
Fax: (+1) 419-678-2200

HOW TO ORDER BROILER & PULLET PAN FEEDERS

- Recommended Bird Density Per Pan:

Broilers	55 - 80	(14" Pans)
Broilers	50 - 75	(13" Pans)

Type	Age	Chain		Pan*
	Weeks	Inch / Bird	cm / Bird	Birds / Pan
Female	0-4	2	5	20-27
Female	5-8	3.5	9	17-19
Female	9-12	5	13	15-17
Female	13-21	6	15	11-13
Female	Production	6	15	10-13
Male	0-4	2.5	6	20-25
Male	5-8	4	10	15-17
Male	9-12	5.5	14	13-15
Male	13-21	7	18	8-11
Male	Production	8-10	20-25	8-11

* Pan is based on 13 or 14 inch in diameter. Updated (3/20/2026)

Note:

Feed Pan guidelines are based on Industry Standards for adequate feed space per birds at different ages. Under restricted feeding, it may sometimes be necessary to operate outside of the recommended birds per pan in order to maintain even feed distribution across the system

- Determine the number of feed lines and type of line needed (end fill or center fill).
- Refer to the feeder line component requirement charts on pages 15-16 thru 15-21.
- A complete feeder line order should include the following items:
  - End house control pan (2 per center fill line) - also mid-house control pan if required.
  - Motor & Gearbox Drive Unit per control pan.
  - Boot or Hopper Base with feed hopper/upper hopper.
    - Boot Safety Switch required on augers running at 657 RPM.
  - Pan Feeder units.
  - Best Start Chick Feeders if required.
  - Feed line tubes - include tubes with Best Start holes if required.
  - Tube clamps (if required) and tube hangers.
  - Auger - must be ordered in full length rolls.
  - Anti-Roost Items as needed.
  - Feed Control Switches and/or miscellaneous items as needed.
- Feed Delivery Rate based on 40 lbs. per cubic foot (340 kg per cubic meter) is approximately 17 pounds (7.7 kgs.) per minute at 358 RPM with full restrictor shaft with mash feed.

Toll-free: 1-800-99VALCO
Phone: (+1) 419-678-8731
Fax: (+1) 419-678-2200

CONTROL PANS
Fuze ProLine Feeders

FUZE PROLINE CONTROL PANS
WITH *MECHANICAL SWITCH*

CATALOG #	ITEM DESCRIPTION	SHIP WEIGHT LBS.	SHIP WEIGHT KG.	LIST PRICE
820327	For FE1500RS Fuze ProLine Feeder 13" Standard Pan, 13 Spoke Grill	3.80	1.72	
820328	For FE1500RLS Fuze ProLine Feeder 13" Shallow Pan, 13 Spoke Grill	2.04	0.92	
820329	For FE1600RS Fuze ProLine Feeder 14" Standard Pan, 14 Spoke Grill	3.75	1.70	
820330	For FE1600RLS Fuze ProLine Feeder 14" Shallow Pan, 14 Spoke Grill	2.21	1.00	
820331	For FE1800RS Fuze ProLine Feeder 14" Standard Pan, 5 Spoke Grill	3.94	1.79	
820332	For FE1800RLS Fuze ProLine Feeder 14" Shallow Pan, 5 Spoke Grill	2.10	0.95	
820022	Bird Attracting LED Light For Control Pans (Universal)	0.88	0.40	

END CONTROL MOTOR MOUNT
FOR FUZE & FUZE PROLINE MECHANICAL & PROXIMITY SENSOR CONTROL PANS

CATALOG #	ITEM DESCRIPTION	SHIP WEIGHT LBS.	SHIP WEIGHT KG.	LIST PRICE
455960	End Control Motor Mount Plate With Electric Box - For All Fuze Pro Proximity Sensor or Mechanical Switch Control Pans ► **SINGLE PHASE 60/50 HZ (With relay)**	11.73	5.32	
455965	End Control Motor Mount Plate With Electric Box - For All Fuze Pro Proximity Sensor or Mechanical Switch Control Pans ► **1 or 3-PHASE 60/50 HZ (No relay)**	8.70	3.95	

Note: 455960 or 455965 required for all Fuze & Fuze ProLine Proximity Sensor and Mechanical Control Pans used at end of feeder line.

MID LINE CONTROL PAN RELAY
FOR FUZE & FUZE PROLINE MECHANICAL & PROXIMITY SENSOR CONTROL PANS

CATALOG #	ITEM DESCRIPTION	SHIP WEIGHT LBS.	SHIP WEIGHT KG.	LIST PRICE
750671	Mid Line Control Pan Electric Box with Relay - For All Fuze Pro Proximity Sensor & Mechanical Switch Control Pans ► **SINGLE PHASE 60/50 HZ**	1.62	0.73	

CONTROL PANS
Fuze ProLine Feeders

FUZE PROLINE CONTROL PANS

WITH *PROXIMITY Switch* *(0-60 sec. delay, adjustable sensitivity)*

CATALOG #	ITEM DESCRIPTION	SHIP WEIGHT LBS.	SHIP WEIGHT KG.	LIST PRICE
455920	For FE1500RS Fuze ProLine Feeder 13" Standard Pan, 13 Spoke Grill	2.90	1.32	
455921	For FE1500RLS Fuze ProLine Feeder 13" Shallow Pan, 13 Spoke Grill	2.90	1.32	
455919	For FE1600RS Fuze ProLine Feeder 14" Standard Pan, 14 Spoke Grill	2.90	1.32	
455922	For FE1600RLS Fuze ProLine Feeder 14" Shallow Pan, 14 Spoke Grill	2.90	1.32	
455923	For FE1800RS Fuze ProLine Feeder 14" Standard Pan, 5 Spoke Grill	2.90	1.32	
455924	For FE1800RLS Fuze ProLine Feeder 14" Shallow Pan, 5 Spoke Grill	2.90	1.32	
820022	**Bird Attracting LED Light For Control Pans (Universal)**	0.88	0.40	

END CONTROL MOTOR MOUNT

FOR FUZE & FUZE PROLINE MECHANICAL & PROXIMITY SENSOR CONTROL PANS

CATALOG #	ITEM DESCRIPTION	SHIP WEIGHT LBS.	SHIP WEIGHT KG.	LIST PRICE
455960	End Control Motor Mount Plate With Electric Box - For All Fuze Pro Proximity Sensor Control Pans ► **SINGLE PHASE 60/50 HZ**	11.73	4.63	
455965	End Control Motor Mount Plate With Electric Box - For All Fuze Pro Proximity Sensor Control Pans ► **3-PHASE 60/50 HZ**	8.70	3.95	

Note: 455900 or 455915 required for all Fuze & Fuze ProLine Proximity Sensor and Mechanical Control Pans used at end of feeder line.

MID LINE CONTROL PAN RELAY

FOR FUZE & FUZE PROLINE MECHANICAL & PROXIMITY SENSOR CONTROL PANS

CATALOG #	ITEM DESCRIPTION	SHIP WEIGHT LBS.	SHIP WEIGHT KG.	LIST PRICE
750671	Mid Line Control Pan Electric Box with Relay - For All Fuze Pro Proximity Sensor & Mechanical Switch Control Pans ► **SINGLE PHASE 60/50 HZ**	1.62	0.73	

Toll-free: 1-800-99VALCO
Phone: (+1) 419-678-8731
Fax: (+1) 419-678-2200

CONTROL PANS FOR OTHER FEEDERS

CONTROL PANS - MECHANICAL SWITCH

CATALOG #	ITEM DESCRIPTION	SHIP WEIGHT LBS.	SHIP WEIGHT KG.	LIST PRICE
450950	End House Control Pan Unit With Mechanical Switch For All Feeders except Fuze and Fuze ProLine Feeders	17.14	7.8	
450975	Mid-House Control Pan For All Feeders except Fuze and Fuze ProLine Feeders	13.00	5.9	
450111	Mid-House Control Pan - Clamp-On Style For All Feeders	7.58	3.4	

CONTROL PANS - PROXIMITY SENSOR (END / MID-HOUSE)

CATALOG #	ITEM DESCRIPTION	SHIP WEIGHT LBS.	SHIP WEIGHT KG.	LIST PRICE
455030	PX2 Feeder - 8 Spoke End/Mid-House Control Pan With Proximity Sensor	0.17	0.1	
455180	Hen Feeder for Chain Trough attachment. Includes all hardare.	3.76	1.7	
820022	**Bird Attracting LED Light For Control Pans (Universal)**	0.88	0.4	

END CONTROL MOTOR MOUNT
FOR PROXIMITY SENSOR CONTROL PANS

CATALOG #	ITEM DESCRIPTION	SHIP WEIGHT LBS.	SHIP WEIGHT KG.	LIST PRICE
450603	End Control Motor Mount Plate With Electric Box - For Proximity Sensor Control Pans - SINGLE PHASE 60/50 HZ	8.20	3.7	
450941	End Control Motor Mount Plate With Electric Box - For Proximity Sensor Control Pans - 3-PHASE 60/50 HZ	8.90	4.0	

Note: 450603 or 450941 required for all Proximity Sensor Control Pans when used at end of feeder line.
Not required for mechanical switch end control pans.

DIRECT DRIVE UNITS

DIRECT DRIVE MOTOR & GEARBOX UNITS
60HZ - SINGLE PHASE - 115/230V

CATALOG #	ITEM DESCRIPTION	SHIP WEIGHT LBS.	SHIP WEIGHT KG.	LIST PRICE
450397	1/2 HP Direct Drive Motor & Gearbox - 226 RPM	40.60	18.4	
460025	1/2 HP Direct Drive Motor & Gearbox - 358 RPM	34.41	15.6	
450393	1/2 HP Direct Drive Motor & Gearbox - 441 RPM	35.52	16.1	
450287	1/2 HP Direct Drive Motor & Gearbox - 657 RPM	40.60	18.4	

DIRECT DRIVE MOTOR & GEARBOX UNITS
60HZ - 3 PHASE - 208-230/460V

CATALOG #	ITEM DESCRIPTION	SHIP WEIGHT LBS.	SHIP WEIGHT KG.	LIST PRICE
450391	1/2 HP Direct Drive Motor & Gearbox - 358 RPM	31.95	14.5	
450395	1/2 HP Direct Drive Motor & Gearbox - 441 RPM	31.66	14.4	

DIRECT DRIVE MOTOR & GEARBOX UNITS
50HZ - SINGLE PHASE - 115/230V

CATALOG #	ITEM DESCRIPTION	SHIP WEIGHT LBS.	SHIP WEIGHT KG.	LIST PRICE
450397	1/2 HP Direct Drive Motor & Gearbox - 187 RPM	40.60	18.4	
460025	1/2 HP Direct Drive Motor & Gearbox - 296 RPM	34.41	15.6	
450393	1/2 HP Direct Drive Motor & Gearbox - 368 RPM	35.52	16.1	
450287	1/2 HP Direct Drive Motor & Gearbox - 543 RPM	40.60	18.4	

DIRECT DRIVE MOTOR & GEARBOX UNITS
50HZ - 3 PHASE - 208-230/460V OR 190/380V

CATALOG #	ITEM DESCRIPTION	SHIP WEIGHT LBS.	SHIP WEIGHT KG.	LIST PRICE
450391	1/2 HP Direct Drive Motor & Gearbox - 296 RPM	31.95	14.5	
450395	1/2 HP Direct Drive Motor & Gearbox - 368 RPM	31.66	14.4	

PINION SPACER TOOL

CATALOG #	ITEM DESCRIPTION	SHIP WEIGHT LBS.	SHIP WEIGHT KG.	LIST PRICE
740517	Pinion Spacer - Field Tool	0.50	0.2	

Toll-free: 1-800-99VALCO
Phone: (+1) 419-678-8731
Fax: (+1) 419-678-2200

WWW.VAL-CO.COM

BOOTS - FEED HOPPERS

BOOTS - HOPPERS

CATALOG #	ITEM DESCRIPTION	SHIP WEIGHT LBS.	SHIP WEIGHT KG.	LIST PRICE
450810	Single Outlet Boot Assembly (use 100 or 200 lb. hopper only - do not use 90 lbs. hopper)	17.15	7.8	
450800	Double Outlet Boot Assembly (use 100 or 200 lb. hopper only - do not use 90 lbs. hopper)	27.20	12.3	
451315	100 lb. Capacity Feed Hopper, Slip-In	28.40	12.9	
451320	200 lb. Capacity Feed Hopper, Slip-In	35.00	15.9	
451022	100 lb. Extension for Galvanized Feed Hopper (for 451315 or 451320)	14.80	6.7	
450804	Cover for 100 lb. or 200 lb. Hopper	9.35	4.2	
450844	Cover Plate Only for 450016/450098 Boots (no feed hopper)	1.60	0.7	
451356	150 lb. Capacity Green Poly Feed Hopper Kit - Ships Cone Assembled	8.20	3.7	
451357	150 lb. Capacity Green Poly Feed Hopper Kit - Ships Cone Flat	30.50	13.8	
451355	150 lb. Capacity Poly Feed Hopper Lid - Green	6.34	2.9	
415543	Flared Adapter for Boot	0.54	0.2	
455078	Adapter Plate - CT Hopper to Val-Co Boot	0.00	0.0	
730375	Adapter Plate joins feed hopper to Flexible Auger lower boot	2.60	1.2	
BE82380	Single Hopper Base (Beacon Style - Use Only 90 lbs. Hopper Below)	10.50	4.8	
BE9441	Double Hopper Base (Beacon Style - Use Only 90 lbs. Hopper Below)	19.00	8.6	

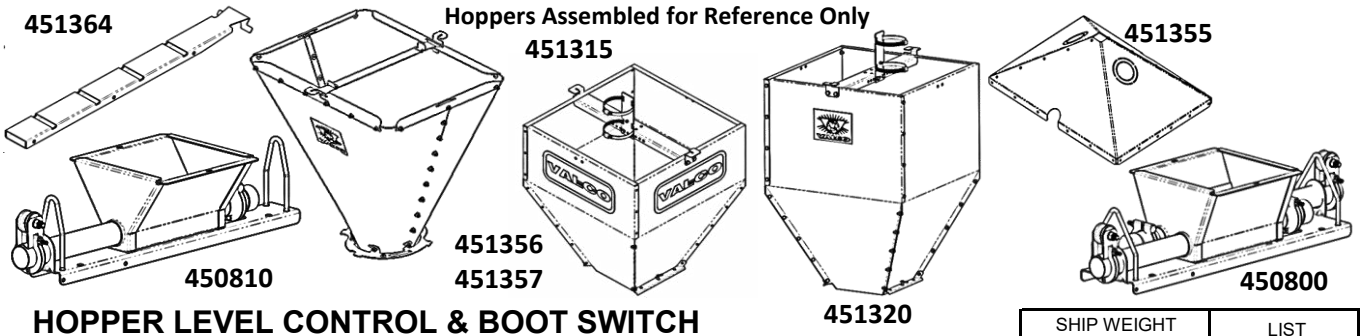

HOPPER LEVEL CONTROL & BOOT SWITCH

CATALOG #	ITEM DESCRIPTION	SHIP WEIGHT LBS.	SHIP WEIGHT KG.	LIST PRICE
720097	Adjustable-Mechanical hopper level control. 220V, 20amp, 1-3phase, 50-60hz	4.80	2.2	
455800	Boot Safety Switch, Proximity, adj. delay 0-60 sec., adj. sensitivity, 220v 50-60hz	3.96	1.8	
730965	Boot Safety Switch, Mechanical, Adjustable	1.13	0.5	
451364	Galv. Hanger for 720097 (Hopper Level Switch) - use with Poly Hopper	1.55	0.7	

* Boot Safety Switch required for augers running @ 657 RPM

Toll-free: 1-800-99VALCO
Phone: (+1) 419-678-8731
Fax: (+1) 419-678-2200

WWW.VAL-CO.COM

Pan Feeders

Fuze ProLine® Feeders with One Piece Towers

CATALOG #	ITEM DESCRIPTION	FEEDER	SHIP WEIGHT LBS.	SHIP WEIGHT KG.	LIST PRICE
FE1500RS-1P	13" Fuze ProLine Standard Pan Assembly With 13 Spoke Grill	FLOOD	1.36	0.6	
FE1500RS-1PSO	With Shutoff		1.94	0.9	
FE1500RLS-1P	13" Fuze ProLine Shallow Pan Assembly With 13 Spoke Grill	FLOOD	1.36	0.6	
FE1500RLS-1PSO	With Shutoff		2.07	0.9	
FE1600RS-1P	14" Fuze ProLine Standard Pan Assembly With 14 Spoke Grill	FLOOD	1.49	0.7	
FE1600RS-1PSO	With Shutoff		2.07	0.9	
FE1600RLS-1P	14" Fuze ProLine Shallow Pan Assembly With 14 Spoke Grill	FLOOD	1.74	0.8	
FE1600RLS-1PSO	With Shutoff		2.07	0.9	
FE1800RS-1P	14" Fuze ProLine Standard Pan Assembly With 5 Spoke Grill	FLOOD	1.46	0.7	
FE1800RS-1PSO	With Shutoff		2.07	0.9	
FE1800RLS-1P	14" Fuze ProLine Shallow Pan Assembly With 5 Spoke Grill	FLOOD	1.70	0.8	
FE1800RLS-1PSO	With Shutoff		2.07	0.9	

Fuze ProLine® Feeders with Two Piece Towers (Standard Top)

FE1500RS	13" Fuze ProLine Standard Pan Assembly With 13 Spoke Grill	FLOOD	2.40	1.1	
FE1500RS-SO	With Shutoff		1.96	0.9	
FE1500RLS	13" Fuze ProLine Shallow Pan Assembly With 13 Spoke Grill	FLOOD	2.10	1.0	
FE1500RLS-SO	With Shutoff		2.09	0.9	
FE1600RS	14" Fuze ProLine Standard Pan Assembly With 14 Spoke Grill	FLOOD	2.55	1.2	
FE1600RS-SO	With Shutoff		2.09	0.9	
FE1600RLS	14" Fuze ProLine Shallow Pan Assembly With 14 Spoke Grill	FLOOD	2.42	1.1	
FE1600RLS-SO	With Shutoff		2.09	0.9	
FE1800RS	14" Fuze ProLine Standard Pan Assembly With 5 Spoke Grill	FLOOD	2.29	1.0	
FE1800RS-SO	With Shutoff		2.09	0.9	
FE1800RLS	14" Fuze ProLine Shallow Pan Assembly With 5 Spoke Grill	FLOOD	2.42	1.1 0	
FE1800RLS-SO	With Shutoff		2.09	0.9	

FE1500RLS-1P

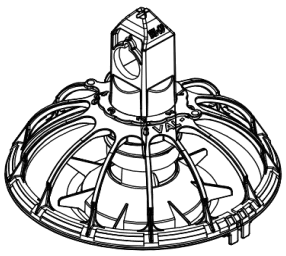

FE1600RLS-SO

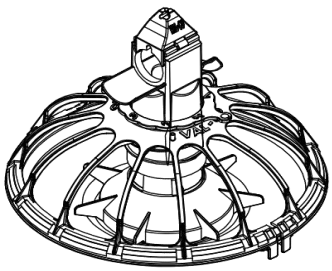

FE1800RL

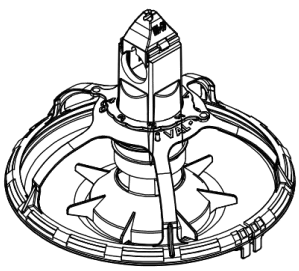

FE1800RS-SO

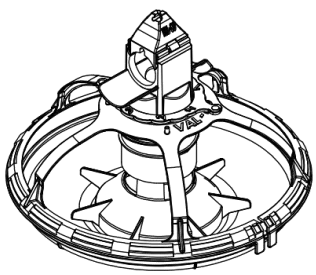

FUZE V Pan Feeders

Fuze V Feeders - Two Piece

CATALOG #	ITEM DESCRIPTION	SHIP WEIGHT LBS.	SHIP WEIGHT KG.	LIST PRICE
451700	14" Fuze V Easy Access Pan Assembly no Shutoff	1.94	0.9	
451710	14" Fuze V Easy Access Pan Assembly w/ Shutoff	1.98	0.9	
451705	14" Fuze V Standard Pan Assembly no Shutoff	2.08	0.9	
451715	14" Fuze V Standard Pan Assembly w/ Shutoff	2.20	1.0	
451065	Feed Restiction PVC Extension Kit	0.22	0.1	

451700

451065

451715

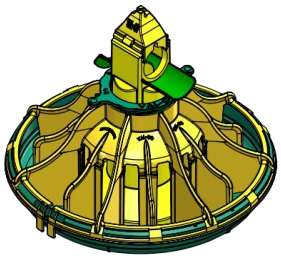

Fuze V Feeders - Two Piece Control Pans

451800	14" Fuze V Easy Access Proximity Control Pan Assembly no Shutoff	3.38	1.5	
451805	14" Fuze V Standard Proximity Control Pan Assembly no Shutoff	3.52	1.6	
451900	14" Fuze V Easy Access Mechanical Control Pan Assembly no Shutoff	2.66	1.2	
451905	14" Fuze V Standard Mechanical Contol Pan Assembly no Shutoff	2.71	1.2	

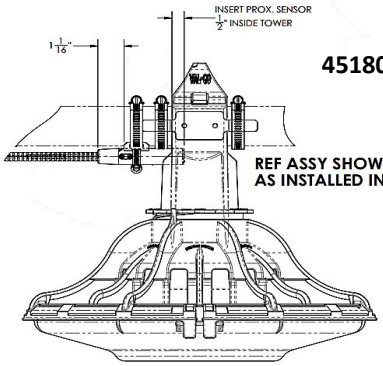

451800/451805

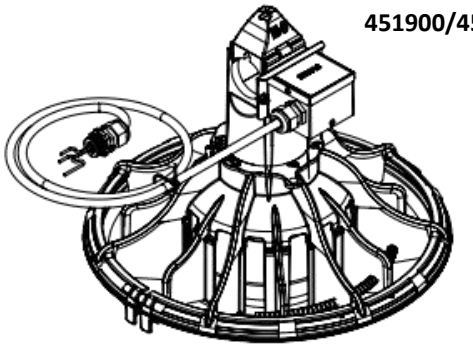

451900/451905

Pan Feeders

Fuze ProLine® Feeders with One or Two Piece Towers
(with Short Top For Broiler Cage Application)

FE1500RS-SLT	13" Fuze ProLine Low Top Standard Pan Assembly With Solid Tower and 13 Spoke Grill	FLOOD	1.36	0.6	
FE1500RS-SLTSO	with Shutoff		1.93	0.9	
FE1500RLS-SLT	13" Fuze ProLine Low Top Shallow Pan Assembly With Solid Tower and 13 Spoke Grill	FLOOD	1.36	0.6	
FE1500RLS-SLTSO	with Shutoff		2.06	0.9	
FE1500RS-LT	13" Fuze ProLine Low Top Standard Pan Assembly With Two Piece Tower and 13 Spoke Grill	FLOOD	1.36	0.6	
FE1500RS-LTSO	with Shutoff		1.36	0.6	
FE1500RLS-LT	13" Fuze ProLine Low Top Shallow Pan Assembly With Two Piece Tower and 13 Spoke Grill	FLOOD	1.36	0.6	
FE1500RLS-LTSO	with Shutoff		0.00	0.0	

PX Feeders

450730	PX2 Pan Feeder - 8 Spoke Grill (13" Pan)	1.70	0.8	
455060	PX2 Pan Feeder - 8 Spoke Grill (13" Pan) Includes Non-Swing Kit & Feed Volume Restrictor	2.05	0.9	

Repair Parts

Fuze ProLine® Feeder Repair Parts

FE1510LS	13" Fuze Slotted Shallow Pan	0.74	0.3	
FE1510S	13" Fuze Slotted Standard Pan	0.61	0.3	
FE1520R	13" Fuze Pro Grill - 13 Spokes	0.36	0.2	
FE1530	Fuze Feeder Tower (For two piece tower)	0.33	0.1	
FE1550	Fuze Feeder Standard Top (For two piece tower)	0.05	0.0	
FE1551	Fuze Feeder Low Top (For two piece tower)	0.04	0.0	
FE1540	Fuze Adj Collar, Standard Pan	0.16	0.1	
FE1540S	Fuze Adj Collar, Shallow Pan	0.14	0.1	
FE1610LS	14" Fuze Slotted Shallow Pan	0.74	0.3	
FE1610S	14" Fuze Slotted Standard Pan	0.65	0.3	
FE1560	Fuze Feeder Grill Lock	0.00	0.0	

Parts & Accessories

Perch, Support & Anti-Roost

CATALOG #	ITEM DESCRIPTION	SHIP WEIGHT LBS.	SHIP WEIGHT KG.	LIST PRICE
451042	Anti-Roost Insulator Bracket Assembly with 2 Cable Clamps	0.43	0.2	
450437	Spring for Anti-Roost Shocker Wire	0.13	0.1	
VG342	1/16" Anti-Roost Wire	0.01	0.0	
VC353	1/16" Clamp for Anti-Roost Wire	0.02	0.0	
451034	Fuze/PXP Pan Anti-Roost (*Requires [4] 451008 Clamps)*	0.95	0.4	
451008	1 3/4" SS Tube Clamp *(4 needed for 451034)*	0.05	0.0	
820640	Spinner, Stop Roost, 22" Long (Snaps onto Anti-Roost Wire)	0.27	0.1	
630285	Pan Feeder Perch Support - 1 Piece	2.82	1.3	
630286	Pan Feeder Perch Support Leg (2 needed for every floor mount)	0.98	0.4	
630280	Pan Feeder Perch Support - 2 Piece Kit	3.10	1.4	
631811	1.25" Dia Pipe Coupler Kit	0.72	0.3	
631865	1.25" OD x 20' 14GA Pipe with Holes	17.78	8.1	
631812	1.25" OD pipe Plug	0.02	0.0	
630289	Cross Perch Rail	3.90	1.8	
630288	Tube Saddle	0.90	0.4	
690285	Tek Screw - Hex Self-Drill Zinc Plated	0.01	0.0	

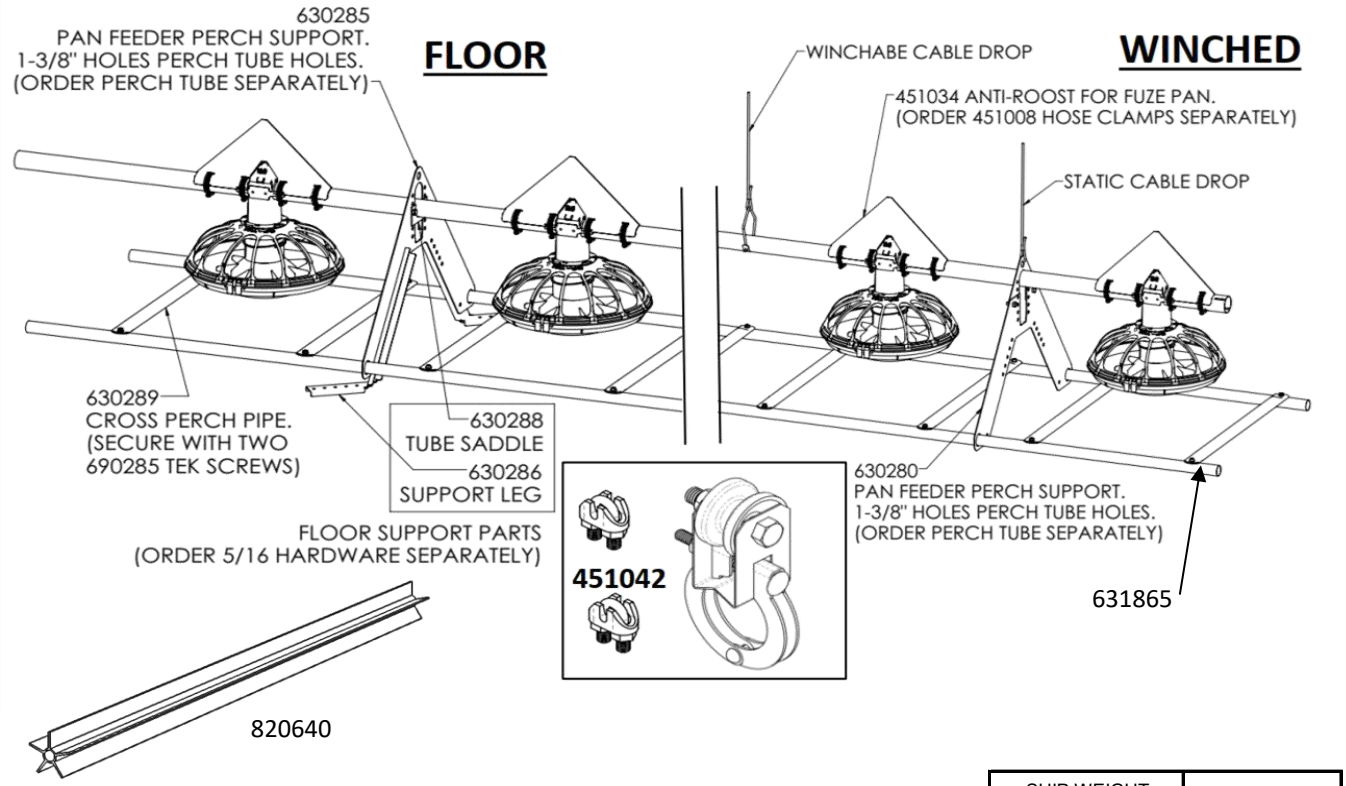

Fuze Anti-Swing Kit & Pullet Feed Restrictor

		SHIP WEIGHT LBS.	SHIP WEIGHT KG.	LIST PRICE
451011	Anti-Swing Kit for Smooth Tube (Includes two clamps) - FUZE	0.32	0.1	
451062	Anti-Swing Kit for Ribbed Tube (Includes two clamps) - FUZE	0.15	0.1	
450594	Optional feed restrictor for all rooster feeders.	0.10	0.0	

Toll-free: 1-800-99VALCO
Phone: (+1) 419-678-8731
Fax: (+1) 419-678-2200

WWW.VAL-CO.COM

CLEAN START CHICK FEEDER, BEST START CHICK FEEDER FEED TRAYS

BEST START CHICK FEEDER WITH STANDARD SPOUT

CATALOG #	ITEM DESCRIPTION	SHIP WEIGHT LBS.	SHIP WEIGHT KG.	LIST PRICE Each
FE300	Best Start Chick Feeder	0.37	0.17	
FE300CR	Best Start Chick Feeder with Crown Sleeve	0.35	0.16	
FE350	Hooked Extender for Best Start Chick Feeder	0.03	0.01	
FE360	Crown Sleeve for Best Start Chick Feeder	0.12	0.05	

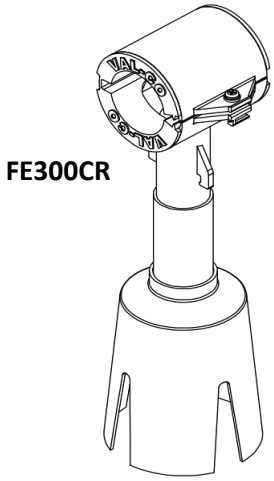

BEST START II CHICK FEEDER and STANDARD EXTENSION

CATALOG #	ITEM DESCRIPTION	SHIP WEIGHT #N/A	SHIP WEIGHT KG.	LIST PRICE- Boxes of 50
820005	Basic Best Start II Chick Feeder, box of 50	9.85	4.47	
820006	Best Start II 3" (7.6cm) Extension Spout, box of 50	2.96	1.34	
820009-Q50	Best Start II 6" (15.2cm) Extension Spout, box of 50	5.10	2.31	
				List Price Ea.
820005-1	Basic Best Start II Chick Feeder, Single Piece	0.20	0.09	
820006-1	Best Start II 3" (7.6cm) Extension Spout, Single Piece	0.06	0.03	
820009	Best Start II 6" (15.2cm) Extension Spout, Single Piece	0.10	0.05	

820005

CATALOG #	ITEM DESCRIPTION	SHIP WEIGHT LBS.	SHIP WEIGHT KG.	LIST PRICE
820221-Q30	Clean Start Chick Feeder Complete. **Box of 30 only.**	27.45	12.45	
820446-Q30	Clean Start Feed Line Tube Shut Off. **Bag of 30 only.**	3.20	1.45	

UltraStart™ CHICK FEEDER

CATALOG #	ITEM DESCRIPTION	SHIP WEIGHT LBS.	SHIP WEIGHT KG.	LIST PRICE
820194-Q30	UltraStart Chick Feeder Complete. **Box of 30 only.**	42.10	19.1	
820197-Q10	UltraStart Feed Bowl Extension. **Box of 10 only.**	6.84	3.1	
820446-Q30	Clean Start Feed Line Tube Shut Off. **Bag of 30 only.**	3.20	1.5	
820192-Q30	UltraStart Above Line Storage Kit. ***(Includes feed line shut off.)*** **Box of 30 only.**	4.85	2.2	
820195-Q30	UltraStart Underline hanger. **Box of 30 only.**	4.18	1.9	
820205	Ultra Start Carry Handle	0.13	0.1	

70 to 100 Chicks per Ultra Start

When Ordering Please Refer To The Diagram Below

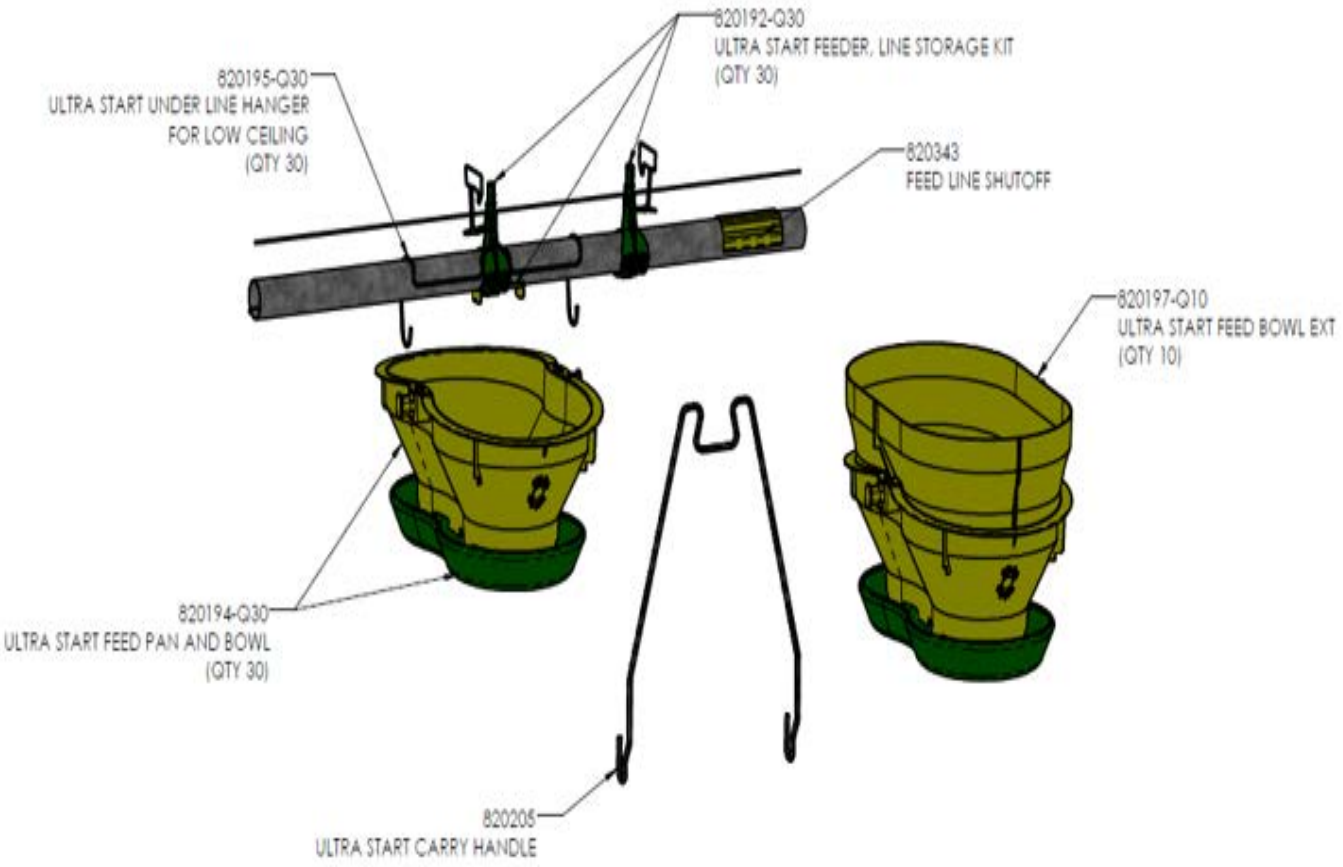

FEED TUBES - SMOOTH TUBE

SMOOTH TUBES (Tube Clamps Required)

CATALOG #	ITEM DESCRIPTION	SHIP WEIGHT LBS.	SHIP WEIGHT KG.	LIST PRICE
450224	9' Tube - 1 Hole	6.0	2.7	
450081	9' Tube - 2 Holes	6.0	2.7	
451033	9' Tube - 3 Holes	6.0	2.7	
450145	9' Tube - 4 Holes	6.4	2.9	
455076	9' Tube - 4 Holes + 4 Centered Best Start Holes	6.0	2.7	
451047	10' Tube - 0 Holes	8.0	3.6	
450082	10' Tube - 2 Holes	7.2	3.3	
450083	10' Tube - 3 Holes	7.2	3.3	
450084	10' Tube - 4 Holes	7.6	3.4	
450072	10' Tube - 3 Holes + 3 Centered Best Start Holes	7.2	3.3	
451032	10' Tube - 4 Holes + 2 Centered Best Start Holes	7.2	3.3	
450099	10' Tube - 4 Holes + 4 Centered Best Start Holes	7.2	3.3	

CONTROL SMOOTH TUBES (Tube Clamps Required)

455267	9' Tube - 1 Hole	6.8	3.1	
455269	9' Tube - 2 Holes	6.8	3.1	
455271	9' Tube - 3 Holes	6.8	3.1	
455202	9' Tube - 4 Holes	6.0	2.7	
455273	9' Tube - 4 Holes + 4 Centered Best Start Holes	6.8	3.1	
455275	10' Tube - 2 Holes	7.6	3.4	
455277	10' Tube - 3 Holes	7.6	3.4	
455205	10' Tube - 4 Holes	6.6	3.0	
455279	10' Tube - 3 Holes + 3 Centered Best Start Holes	7.5	3.4	
455281	10' Tube - 4 Holes + 2 Centered Best Start Holes	7.5	3.4	
455283	10' Tube - 4 Holes + 4 Centered Best Start Holes	7.5	3.4	

TUBE CLAMP, ANTI-SWING & HANGERS

451040	1 3/4" Feeder Tube Clamp - (Ribbed & Smooth)	0.2	0.1	
450123	Tube Hanger - for Smooth Tube	0.1	0.1	
450076	Tube Hanger - Scissors Type for Smooth Tube Only	0.3	0.1	
451062	Anti-Swing Kit for Ribbed Tube (Includes two clamps) - FUZE	0.2	0.1	
451011	Anti-Swing Kit for Smooth Tube (Includes two clamps) - FUZE	0.3	0.1	

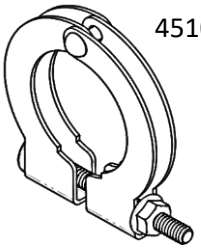

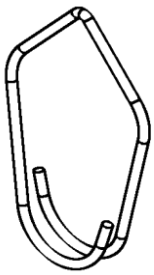

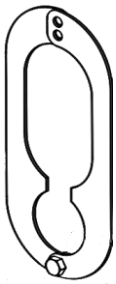

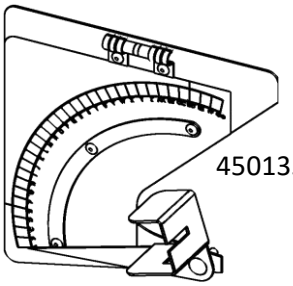

Gauge

450135	Gauge for Tube Indexing	2.1	0.9	
451085	Tube Hanger - for Smooth Tube	0.2	0.1	

FEED TUBES - RIBBED TUBE

RIBBED TUBES (Tube Clamps Required)

455626	9' Tube - 3 Holes	7.5	3.4	
450920	9' Tube - 4 Holes	7.4	3.4	
455627	9' Tube - 3 Holes + 3 Centered Best Start Holes	7.5	3.4	
451031	9' Tube - 4 Holes + 2 Centered Best Start Holes	7.4	3.4	
450921	9' Tube - 4 Holes + 4 Centered Best Start Holes	7.4	3.4	
451000	10' Tube - No Holes	8.2	3.7	
450908	10' Tube - 2 Holes	8.2	3.7	
450909	10' Tube - 3 Holes	8.2	3.7	
450910	10' Tube - 4 Holes	8.2	3.7	
450911	10' Tube - 3 Holes + 3 Centered Best Start Holes	8.2	3.7	
455625	10' Tube - 4 Holes + 2 Centered Best Start Holes	8.2	3.7	
450913	10' Tube - 4 Holes + 4 Centered Best Start Holes	8.2	3.7	
451005	12' Tube - 3 Holes	10.9	4.9	
451005-Q120	12' Tube - 3 Holes - 120 Piece Skid Quantity	1,164.0	528.0	
450924	12' Tube - 4 Holes	9.7	4.4	
450924-Q120	12' Tube - 4 Holes - 120 Piece Skid Quantity	1,164.0	528.0	
450925	12' Tube - 5 Holes	9.7	4.4	
450925-Q120	12' Tube - 5 Holes - 120 Piece Skid Quantity	1,164.0	528.0	
450926	12' Tube - 4 Holes + 4 Centered Best Start Holes	9.7	4.4	
450926-Q120	12' Tube - 4 Holes + 4 Centered Best Start Holes - QTY 120	1,164.0	528.0	
450928	12' Tube - 5 Holes + 5 Centered Best Start Holes	9.7	4.4	
450928-Q120	12' Tube - 5 Holes + 5 Centered Best Start Holes - QTY 120	1,164.0	528.0	

CONTROL RIBBED TUBES (Tube Clamps Required)

455628	9' Tube - 3 Holes	7.5	3.4	
455219	9' Tube - 4 Holes	7.4	3.4	
455629	9' Tube - 3 Holes + 3 Centered Best Start Holes	7.5	3.4	
455630	9' Tube - 4 Holes + 2 Centered Best Start Holes	7.4	3.4	
455223	10' Tube - 4 Holes	8.2	3.7	
455624	10' Tube - 4 Holes + 2 Centered Best Start Holes	8.2	3.7	
455248	10' Tube - 4 Holes + 4 Centered Best Start Holes	8.2	3.7	

TUBE CLAMP & HANGERS

451040	1 3/4" Feeder Tube Clamp - (Ribbed & Smooth)	0.2	0.1	
450826	Tube Hanger - for Ribbed Tube	0.1	0.1	

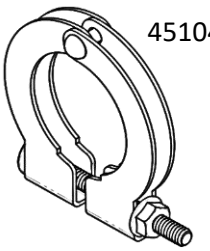

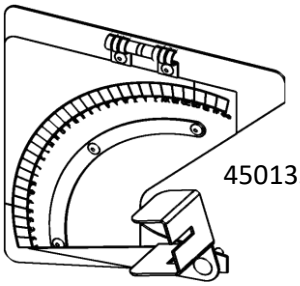

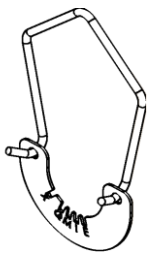

Gauge

450135	Gauge for Tube Indexing	2.1	0.9	
451085	Tube Hanger for Index Line	0.2	0.1	

AUGER

AUGER

CATALOG #	ITEM DESCRIPTION	SHIP WEIGHT LBS.	SHIP WEIGHT KG.	LIST PRICE
450450-205	205' Roll - 1.438" O.D. Auger	71.8	32.5	
450450-225	225' Roll - 1.438" O.D. Auger	78.8	35.7	
450450-245	245' Roll - 1.438" O.D. Auger	85.8	38.9	
450450-265	265' Roll - 1.438" O.D. Auger	92.8	42.1	
450450-285	285' Roll - 1.438" O.D. Auger	99.8	45.2	
450450-305	305' Roll - 1.438" O.D. Auger	106.8	48.4	
450450-325	325' Roll - 1.438" O.D. Auger	113.8	51.6	
450450-345	345' Roll - 1.438" O.D. Auger	120.8	54.8	
450450-365	365' Roll - 1.438" O.D. Auger	127.8	57.9	
450450-385	385' Roll - 1.438" O.D. Auger	134.8	61.1	
450450-405	405' Roll - 1.438" O.D. Auger	141.5	64.2	
450450-425	425' Roll - 1.438" O.D. Auger	148.8	67.5	
450450-445	445' Roll - 1.438" O.D. Auger	155.8	70.6	
450450-465	465' Roll - 1.438" O.D. Auger	162.8	73.8	
450450-485	485' Roll - 1.438" O.D. Auger	169.8	77.0	
450450-505	505' Roll - 1.438" O.D. Auger	176.8	80.2	
450450-540	540' Roll - 1.438" O.D. Auger	189.0	85.7	
450450-565	565' Roll - 1.438" O.D. Auger	198.0	89.8	
450450-600	600' Roll - 1.438" O.D. Auger	210.0	95.3	
450450-650	650' Roll - 1.438" O.D. Auger	227.5	103.2	

Auger must be ordered in full length rolls.

Toll-free: 1-800-99VALCO
Phone: (+1) 419-678-8731
Fax: (+1) 419-678-2200

WWW.VAL-CO.COM

POULTRY - 2/3/4 PANS PER 9' TUBE - SINGLE BOOT / END FILL

Feed Line Length	Feed Line Length	Items to Select											Anti-Roost		
		End House Control Pan	1/2 HP Motor & Gearbox	Feed Hopper	Single Outlet Boot	Pan Feeder Assy (Page 17-07 for options)			9' Tube	1.75" Tube Clamp (Ribbed or Smooth)	1.75" Tube Hanger Ribbed - 450826 Smooth - 450123 / 450076	1.438" OD Auger (Feet)	Insulator Bracket & Clamp	Spring for Anti-Roost Wire	1/16" Anti-Roost Wire
Feet	Meter				450810	2 Pan	3 Pan	4 Pan		451040		450450-	451042	450437	VG342
108	33	1	1	1	1	24	36	48	12	11	14	108	2	2	130
117	36	1	1	1	1	26	39	52	13	12	15	117	2	2	140
126	39	1	1	1	1	28	42	56	14	13	16	126	2	2	150
135	42	1	1	1	1	30	45	60	15	14	17	136	2	2	160
144	45	1	1	1	1	32	48	64	16	15	18	144	3	3	170
153	48	1	1	1	1	34	51	68	17	16	20	153	3	3	180
162	51	1	1	1	1	36	54	72	18	17	21	162	3	3	190
171	54	1	1	1	1	38	57	76	19	18	22	171	3	3	200
180	57	1	1	1	1	40	60	80	20	19	23	180	3	3	200
189	60	1	1	1	1	42	63	84	21	20	24	189	4	4	210
198	63	1	1	1	1	44	66	88	22	21	25	198	4	4	220
207	66	1	1	1	1	46	69	92	23	22	26	207	4	4	230
216	69	1	1	1	1	48	72	96	24	23	27	216	4	4	240
225	72	1	1	1	1	50	75	100	25	24	29	225	4	4	250
234	75	1	1	1	1	52	78	104	26	25	30	234	5	5	260
243	78	1	1	1	1	54	81	108	27	26	31	243	5	5	270
252	81	1	1	1	1	56	84	112	28	27	32	252	5	5	280
261	84	1	1	1	1	58	87	116	29	28	33	261	5	5	290
270	87	1	1	1	1	60	90	120	30	29	34	270	5	5	290
279	90	1	1	1	1	62	93	124	31	30	35	279	6	6	300
288	93	1	1	1	1	64	96	128	32	31	36	288	6	6	310
297	96	1	1	1	1	66	99	132	33	32	38	297	6	6	320
306	99	1	1	1	1	68	102	136	34	33	39	306	6	6	330
315	102	1	1	1	1	70	105	140	35	34	40	315	6	6	340
324	105	1	1		1	72	108	144	36	35	41	324	7	7	350
333	108	1	1	1	1	74	111	148	37	36	42	333	7	7	360
342	111	1	1	1	1	76	114	152	38	37	43	342	7	7	370
351	114	1	1	1	1	78	117	156	39	38	44	351	7	7	380
360	117	1	1	1	1	80	120	160	40	39	45	360	7	7	380
369	120	1	1	1	1	82	123	164	41	40	47	369	8	8	390
378	123	1	1	1	1	84	126	168	42	41	48	378	8	8	400
387	126	1	1	1	1	86	129	172	43	42	49	387	8	8	410
396	129	1	1	1	1	88	132	176	44	43	50	396	8	8	420
405	132	1	1	1	1	90	135	180	45	44	51	405	8	8	430
414	135	1	1	1	1	92	138	184	46	45	52	414	9	9	440
423	138	1	1	1	1	94	141	188	47	46	53	423	9	9	450
432	141	1	1	1	1	96	144	192	48	47	54	432	9	9	460
441	144	1	1	1	1	98	147	196	49	48	56	441	9	9	470
450	147	1	1	1	1	100	150	200	50	49	57	450	9	9	470
459	150	1	1	1	1	102	153	204	51	50	58	459	10	10	480
468	153	1	1	1	1	104	156	208	52	51	59	468	10	10	490
477	156	1	1	1	1	106	159	212	53	52	60	477	10	10	500
486	159	1	1	1	1	108	162	216	54	53	61	486	10	10	510
495	162	1	1	1	1	110	165	220	55	54	62	495	10	10	520
504	165	1	1	1	1	112	168	224	56	55	63	504	11	11	530

Toll-free: 1-800-99VALCO
Phone: (+1) 419-678-8731
Fax: (+1) 419-678-2200

WWW.VAL-CO.COM

POULTRY - 2/3/4 PANS PER 9' TUBE - DOUBLE BOOT / CENTER FILL

		Items to Select											Anti-Roost		
Feed Line Length	Feed Line Length	End House Control Pan	1/2 HP Motor & Gearbox	Feed Hopper	Double Outlet Boot	Pan Feeder Assy			9' Tube	1.75" Tube Clamp (Ribbed or Smooth)	1.75" Tube Hanger Ribbed - 450826 Smooth - 450123 / 450076	1.438" OD Auger (Feet)	Insulator Bracket & Clamp	Spring for Anti-Roost Wire	1/16" Anti-Roost Wire
Feet	Meter				450800	2 Pan	3 Pan	4 Pan		451040		450450-	451042	450437	VG342
198	60	2	2	1	1	44	66	88	22	18	25	198	4	4	220
207	63	2	2	1	1	46	69	92	23	19	26	207	4	4	230
216	66	2	2	1	1	48	72	96	24	20	27	216	4	4	240
225	69	2	2	1	1	50	75	100	25	21	28	225	4	4	250
234	72	2	2	1	1	52	78	104	26	22	29	234	4	4	260
243	75	2	2	1	1	54	81	108	27	23	30	243	4	4	270
252	78	2	2	1	1	56	84	112	28	24	32	252	4	4	280
261	81	2	2	1	1	58	87	116	29	25	33	261	4	4	290
270	84	2	2	1	1	60	90	120	30	26	34	270	4	4	290
279	87	2	2	1	1	62	93	124	31	25	35	279	6	6	300
288	90	2	2	1	1	64	96	128	32	26	36	288	6	6	310
297	93	2	2	1	1	66	99	132	33	27	37	297	6	6	320
306	96	2	2	1	1	68	102	136	34	28	38	306	6	6	330
315	99	2	2	1	1	70	105	140	35	29	39	315	6	6	340
324	102	2	2	1	1	72	108	144	36	30	41	324	6	6	350
333	105	2	2	1	1	74	111	148	37	31	42	333	6	6	360
342	108	2	2	1	1	76	114	152	38	32	43	342	6	6	370
351	111	2	2	1	1	78	117	156	39	33	44	351	6	6	380
360	114	2	2	1	1	80	120	160	40	34	45	360	6	6	380
369	117	2	2	1	1	82	123	164	41	33	46	369	8	8	390
378	120	2	2	1	1	84	126	168	42	34	47	378	8	8	400
387	123	2	2	1	1	86	129	172	43	35	48	387	8	8	410
396	126	2	2	1	1	88	132	176	44	36	50	396	8	8	420
405	129	2	2	1	1	90	135	180	45	37	51	405	8	8	430
414	132	2	2		1	92	138	184	46	38	52	414	8	8	440
423	135	2	2	1	1	94	141	188	47	39	53	423	8	8	450
432	138	2	2	1	1	96	144	192	48	40	54	432	8	8	460
441	141	2	2	1	1	98	147	196	49	41	55	441	8	8	470
450	144	2	2	1	1	100	150	200	50	42	56	450	8	8	470
459	147	2	2	1	1	102	153	204	51	41	57	459	10	10	480
468	150	2	2	1	1	104	156	208	52	42	59	468	10	10	490
477	153	2	2	1	1	106	159	212	53	43	60	477	10	10	500
486	156	2	2	1	1	108	162	216	54	44	61	486	10	10	510
495	159	2	2	1	1	110	165	220	55	45	62	495	10	10	520
504	162	2	2	1	1	112	168	224	56	46	63	504	10	10	530
513	165	2	2	1	1	114	171	228	57	47	64	513	10	10	540
522	168	2	2	1	1	116	174	232	58	48	65	522	10	10	550
531	171	2	2	1	1	118	177	236	59	49	66	531	10	10	560
540	174	2	2	1	1	120	180	240	60	50	68	540	10	10	560
549	177	2	2	1	1	122	183	244	61	49	69	549	12	12	570
558	180	2	2	1	1	124	186	248	62	50	70	558	12	12	580
567	183	2	2	1	1	126	189	252	63	51	71	567	12	12	590
576	186	2	2	1	1	128	192	256	64	52	72	576	12	12	600
585	189	2	2	1	1	130	195	260	65	53	73	585	12	12	610
594	192	2	2	1	1	132	198	264	66	54	74	594	12	12	620

Toll-free: 1-800-99VALCO
Phone: (+1) 419-678-8731
Fax: (+1) 419-678-2200

WWW.VAL-CO.COM

POULTRY - 2/3/4 PANS PER 10' TUBE - SINGLE BOOT / END FILL

Feed Line Length	Feed Line Length	Items to Select											Anti-Roost		
		End House Control Pan	1/2 HP Motor & Gearbox	Feed Hopper	Single Outlet Boot	Pan Feeder Assy			10' Tube	1.75" Tube Clamp (Ribbed or Smooth)	1.75" Tube Hanger Ribbed - 450826 Smooth - 450123 / 450076	1.438" OD Auger (Feet)	Insulator Bracket & Clamp	Spring for Anti-Roost Wire	1/16" Anti-Roost Wire
Feet	Meter				450810	2 Pan	3 Pan	4 Pan		451040		450450-	451042	450437	VG342
60	18	1	1	1	1	12	18	24	6	5	8	60	1	1	80
70	21	1	1	1	1	14	21	28	7	6	9	70	1	1	90
80	24	1	1	1	1	16	24	32	8	7	10	80	1	1	100
90	28	1	1	1	1	18	27	36	9	8	11	90	1	1	110
100	31	1	1	1	1	20	30	40	10	9	13	100	1	1	120
110	34	1	1	1	1	22	33	44	11	9	14	110	2	2	130
120	37	1	1	1	1	24	36	48	12	10	15	120	2	2	140
130	40	1	1	1	1	26	39	52	13	11	16	130	2	2	150
140	43	1	1	1	1	28	42	56	14	12	18	140	2	2	160
150	46	1	1	1	1	30	45	60	15	13	19	150	2	2	170
160	49	1	1	1	1	32	48	64	16	13	20	160	3	3	180
170	52	1	1	1	1	34	51	68	17	14	21	170	3	3	190
180	55	1	1	1	1	36	54	72	18	15	23	180	3	3	200
190	58	1	1	1	1	38	57	76	19	16	24	190	3	3	210
200	61	1	1	1	1	40	60	80	20	17	25	200	3	3	220
210	64	1	1	1	1	42	63	84	21	17	26	210	4	4	230
220	67	1	1	1	1	44	66	88	22	18	28	220	4	4	240
230	70	1	1	1	1	46	69	92	23	19	29	230	4	4	250
240	73	1	1	1	1	48	72	96	24	20	30	240	4	4	260
250	76	1	1	1	1	50	75	100	25	21	31	250	4	4	270
260	79	1	1	1	1	52	78	104	26	21	33	260	5	5	280
270	82	1	1	1	1	54	81	108	27	22	34	270	5	5	290
280	85	1	1	1	1	56	84	112	28	23	35	280	5	5	300
290	88	1	1	1	1	58	87	116	29	24	36	290	5	5	310
300	92	1	1	1	1	60	90	120	30	25	38	300	5	5	320
310	95	1	1	1	1	62	93	124	31	25	39	310	6	6	330
320	98	1	1	1	1	64	96	128	32	26	40	320	6	6	340
330	101	1	1	1	1	66	99	132	33	27	41	330	6	6	350
340	104	1	1	1	1	68	102	136	34	28	43	340	6	6	360
350	107	1	1	1	1	70	105	140	35	29	44	350	6	6	370
360	110	1	1	1	1	72	108	144	36	29	45	360	7	7	380
370	113	1	1	1	1	74	111	148	37	30	46	370	7	7	390
380	116	1	1	1	1	76	114	152	38	31	48	380	7	7	400
390	119	1	1	1	1	78	117	156	39	32	49	390	7	7	410
400	122	1	1	1	1	80	120	160	40	33	50	400	7	7	420
410	125	1	1	1	1	82	123	164	41	33	51	410	8	8	430
420	128	1	1	1	1	84	126	168	42	34	53	420	8	8	440
430	131	1	1	1	1	86	129	172	43	35	54	430	8	8	450
440	134	1	1	1	1	88	132	176	44	36	55	440	8	8	460
450	137	1	1	1	1	90	135	180	45	37	56	450	8	8	470
460	140	1	1	1	1	92	138	184	46	37	58	460	9	9	480
470	143	1	1	1	1	94	141	188	47	38	59	470	9	9	490
480	146	1	1	1	1	96	144	192	48	39	60	480	9	9	500
490	149	1	1	1	1	98	147	196	49	40	51	490	9	9	510
500	153	1	1	1	1	100	150	200	50	41	63	500	9	9	520

Toll-free: 1-800-99VALCO
Phone: (+1) 419-678-8731
Fax: (+1) 419-678-2200

WWW.VAL-CO.COM

POULTRY- 2/3/4 PANS PER 10' TUBE - DOUBLE BOOT / CENTER FILL

		Items to Select											Anti-Roost		
Feed Line Length	Feed Line Length	End House Control Pan	1/2 HP Motor & Gearbox	Feed Hopper	Double Outlet Boot	Pan Feeder Assy (Page 17-07 for options)			10' Tube	1.75" Tube Clamp (Ribbed or Smooth)	1.75" Tube Hanger Ribbed - 450826 Smooth - 450123 / 450076	1.438" OD Auger (Feet)	Insulator Bracket & Clamp	Spring for Anti-Roost Wire	1/16" Anti-Roost Wire
Feet	Meter				450800	2 Pan	3 Pan	4 Pan		451040		450450-	451042	450437	VG342
160	49	2	2	1	1	32	48	64	16	14	20	160	2	2	180
170	52	2	2	1	1	34	51	68	17	15	21	170	2	2	190
180	55	2	2	1	1	36	54	72	18	16	23	180	2	2	200
190	58	2	2	1	1	38	57	76	19	17	24	190	2	2	210
200	61	2	2	1	1	40	60	80	20	18	25	200	2	2	220
210	64	2	2	1	1	42	63	84	21	19	26	210	4	4	230
220	67	2	2	1	1	44	66	88	22	20	28	220	4	4	240
230	70	2	2	1	1	46	69	92	23	21	29	230	4	4	250
240	73	2	2	1	1	48	72	96	24	22	30	240	4	4	260
250	76	2	2	1	1	50	75	100	25	23	31	250	4	4	270
260	79	2	2	1	1	52	78	104	26	24	33	260	4	4	280
270	82	2	2	1	1	54	81	108	27	25	34	270	4	4	290
280	85	2	2	1	1	56	84	112	28	26	35	280	4	4	300
290	88	2	2	1	1	58	87	116	29	27	36	290	4	4	310
300	92	2	2	1	1	60	90	120	30	28	38	300	4	4	320
310	95	2	2	1	1	62	93	124	31	29	39	310	6	6	330
320	98	2	2	1	1	64	96	128	32	30	40	320	6	6	340
330	101	2	2	1	1	66	99	132	33	31	41	330	6	6	350
340	104	2	2	1	1	68	102	136	34	32	43	340	6	6	360
350	107	2	2	1	1	70	105	140	35	33	44	350	6	6	370
360	110	2	2	1	1	72	108	144	36	34	45	360	6	6	380
370	113	2	2	1	1	74	111	148	37	35	46	370	6	6	390
380	116	2	2	1	1	76	114	152	38	36	48	380	6	6	400
390	119	2	2	1	1	78	117	156	39	37	49	390	6	6	410
400	122	2	2	1	1	80	120	160	40	38	50	400	6	6	420
410	125	2	2	1	1	82	123	164	41	39	51	410	8	8	430
420	128	2	2	1	1	84	126	168	42	40	53	420	8	8	440
430	131	2	2	1	1	86	129	172	43	41	54	430	8	8	450
440	134	2	2	1	1	88	132	176	44	42	55	440	8	8	460
450	137	2	2	1	1	90	135	180	45	43	56	450	8	8	470
460	140	2	2	1	1	92	138	184	46	44	58	460	8	8	480
470	143	2	2	1	1	94	141	188	47	45	59	470	8	8	490
480	146	2	2	1	1	96	144	192	48	46	60	480	8	8	500
490	149	2	2	1	1	98	147	196	49	47	61	490	8	8	510
500	153	2	2	1	1	100	150	200	50	48	63	500	8	8	520
510	156	2	2	1	1	102	153	204	51	49	64	510	10	10	530
520	159	2	2	1	1	104	156	208	52	50	65	520	10	10	540
530	162	2	2	1	1	106	159	212	53	51	66	530	10	10	550
540	165	2	2	1	1	108	162	216	54	52	68	540	10	10	560
550	168	2	2	1	1	110	165	220	55	53	69	550	10	10	570
560	171	2	2	1	1	112	168	224	56	54	70	560	10	10	580
570	174	2	2	1	1	114	171	228	57	55	74	570	10	10	590
580	177	2	2	1	1	116	174	232	58	56	73	580	10	10	600
590	180	2	2	1	1	118	177	236	59	57	74	590	10	10	610
600	183	2	2	1	1	120	180	240	60	58	75	600	10	10	620

Toll-free: 1-800-99VALCO
Phone: (+1) 419-678-8731
Fax: (+1) 419-678-2200

SECTION 16
ROOSTER PAN FEEDER

IN THIS CATALOG SECTION

PAGE NUMBER	CONTENTS
16-02	How to Place a Rooster Pan Feeder Order
16-03	Control Pans & Direct Drive Units
16-04	Scale - Hopper - Boots - Feeders - Tubes
16-05	Tube Clamp - Hangers - Auger
16-06	Ribbed Tube - Hangers
16-06	Anti-Roost & Indexing
16-07	Feed Line Component Requirements 2/3/4 Pans per 9' Tube - Single Boot / End Fill
16-08	Feed Line Component Requirements 2/3/4 Pans per 9' Tube - Double Boot / Center Fill
16-09	Feed Line Component Requirements 2/3/4 Pans per 10' Tube - Single Boot / End Fill
16-10	Feed Line Component Requirements 2/3/4 Pans per 10' Tube - Double Boot / Center Fill

REPAIRS

SEE REPAIR LISTING IN SEPARATE CATALOG

HOW TO ORDER ROOSTER PAN FEEDERS

- Recommended Density of Birds Per Pan: 8 - 10 Roosters
- Determine the number of feed lines and type of line needed (end fill or center fill).
- Refer to the feeder line component requirement charts on pages 16-07 thru 16-10.
- Select feeder line components as specified by the chart. See components listing on pages 16-03 thru 16-06.
- A complete rooster feeder line order should include the following items:
  - End house control pan (2 per center fill line).
  - Motor & Gearbox Drive Unit per control pan - farm duty motor if v-belt drive is selected.
  - Rooster scale.
  - Boot or Hopper Base with 300 lb. (136 kg.).
    - Boot Safey Switch required on augers running at 657 RPM
  - Rooster Pan Feeder units.
  - Feed line tubes.
  - Tube clamps and tube hangers.
  - Auger - must be ordered in full length rolls.
  - Anti-Roost Items as needed.
  - Indexing Tube
- Feed delivery rate based on 40 lbs. per cubic foot (640 kg. per cubic meter) is approximately 17 pounds (7.7 kgs.) per minute at 358 RPM with full restrictor shaft with mash feed.

Toll-free: 1-800-99VALCO
Phone: (+1) 419-678-8731
Fax: (+1) 419-678-2200

CONTROL PANS & DIRECT DRIVE UNITS

CONTROL PANS - MECHANICAL SWITCH

CATALOG #	ITEM DESCRIPTION	SHIP WEIGHT LBS.	SHIP WEIGHT KG.	LIST PRICE
450950	Direct Drive End House Control Pan Unit For All Feeders - Order Motor & Gearbox Below	17.1	7.8	

455020

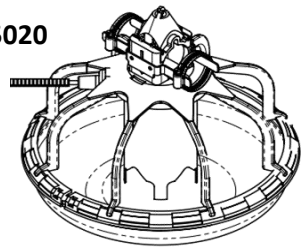

450950

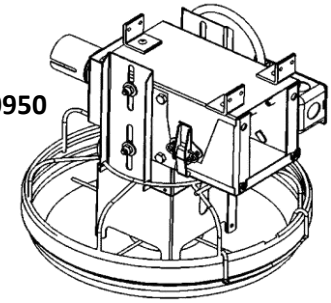

455025

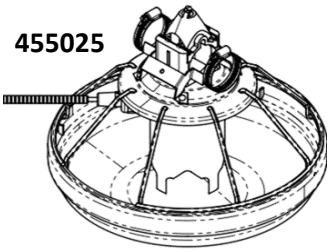

CONTROL PANS - PROXIMITY SENSOR

455020	PXR Rooster End Control Feeder - 8 Spoke Plastic Grill - With Proximity Sensor	2.4	1.1	
455025	PXR Rooster End Control Feeder - 8 Spoke Wire Grill - With Proximity Sensor	3.3	1.5	
450603	End Control Motor Mount Plate With Electric Box - For Proximity Sensor Control Pans - SINGLE PHASE 60/50 HZ	8.2	3.7	
450941	End Control Motor Mount Plate With Electric Box - For Proximity Sensor Control Pans - 3-PHASE 60/50 HZ	8.9	4.0	

Note: 450603 or 450941 required for all Proximity Sensor Control Pans when used at end of feeder line.

DIRECT DRIVE MOTOR & GEARBOX UNITS
60HZ - SINGLE PHASE - 115/230V

450397	1/2 HP Direct Drive Motor & Gearbox - 226 RPM	40.6	18.4	
460025	1/2 HP Direct Drive Motor & Gearbox - 358 RPM	34.4	15.6	
450393	1/2 HP Direct Drive Motor & Gearbox - 441 RPM	35.5	16.1	
450287	1/2 HP Direct Drive Motor & Gearbox - 657 RPM	40.6	18.4	

DIRECT DRIVE MOTOR & GEARBOX UNITS
60HZ - 3 PHASE - 208-230/460V

450391	1/2 HP Direct Drive Motor & Gearbox - 358 RPM	32.0	14.5	
450395	1/2 HP Direct Drive Motor & Gearbox - 441 RPM	31.7	14.4	

DIRECT DRIVE MOTOR & GEARBOX UNITS
50HZ - SINGLE PHASE - 110/220V

450397	1/2 HP Direct Drive Motor & Gearbox - 187 RPM	40.6	18.4	
460025	1/2 HP Direct Drive Motor & Gearbox - 296 RPM	34.4	15.6	
450393	1/2 HP Direct Drive Motor & Gearbox - 368 RPM	35.5	16.1	
450287	1/2 HP Direct Drive Motor & Gearbox - 543 RPM	40.6	18.4	

DIRECT DRIVE MOTOR & GEARBOX UNITS
50HZ - 3 PHASE - 190/380V

450391	1/2 HP Direct Drive Motor & Gearbox - 296 RPM	32.0	14.5	
450395	1/2 HP Direct Drive Motor & Gearbox - 368 RPM	31.7	14.4	

PINION SPACER TOOL

740517	Pinion Spacer Tool	0.5	0.2	

Toll-free: 1-800-99VALCO
Phone: (+1) 419-678-8731
Fax: (+1) 419-678-2200

BOOTS - HOPPER - SCALE - WINCH - FEEDERS

BOOTS

CATALOG #	ITEM DESCRIPTION	SHIP WEIGHT LBS.	SHIP WEIGHT KG.	LIST PRICE
450810	Single Outlet Boot Assembly for End Fill	17.2	7.8	
450800	Double Outlet Boot Assembly for Center Fill	27.2	12.3	

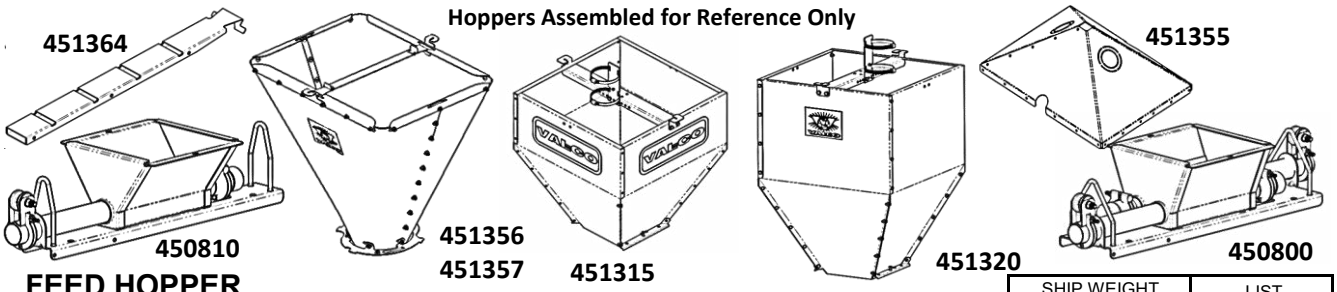

FEED HOPPER

CATALOG #	ITEM DESCRIPTION	SHIP WEIGHT LBS.	SHIP WEIGHT KG.	LIST PRICE
451315	100 lb. Capacity Feed Hopper, Slip-In - Unassembled	28.4	12.9	
451320	200 lb. Capacity Feed Hopper, Slip-In - Unassembled	35.0	15.9	
455820	Hopper Scale Adapter Kit (*Hopper must be purchased separately)	2.5	1.1	
451022	100 lb. Extension for Galvanized Feed Hopper (for 451315 or 451320)	14.8	6.7	
450804	Cover for 100 lb. or 200 lb. Feed Hopper	9.4	4.2	
451356	150 lb. Capacity Green Poly Feed Hopper Kit - Ships w/ Cone Assembled	8.2	3.7	
451357	150 lb. Capacity Green Poly Feed Hopper Kit - Ships w/ Cone Flat	30.5	13.8	
451355	150 lb. Capacity Green Poly Feed Hopper Lid	6.3	2.9	
451364	Galv. Hanger for 720097 (Hopper Level Switch) - use with Poly Hopper	1.6	0.7	

ROOSTER SCALE

415466	350 lb. Rooster Scale With M2L Control	70.0	31.8	
415518	160 kg. Rooster Scale With Metric M2L Control	70.0	31.8	

ROOSTER WINCH

450250	Rooster Winch With Control & Timer	135.0	61.2	

ROOSTER FEEDERS

450718	PXR Rooster Feeder - 8 Spoke Plastic Grill; PVC "flip" adjustment, no shut off	2.1	1.0	
450785	PXR Rooster - 8 Spoke plastic grill, adjustable feed level with slide shut off	1.7 1	0.8	
451044	PXR Rooster - 8 Spoke plastic grill, adjustable feed level **NO** shut off	1.7 1	0.8	
451202	PXR Rooster Feeder - 8 Spoke Wire Grill - 0 to 3 lb. (1.36kg) adjustable capacity; slide shut off	3.1	1.4	
455160	PXR Rooster Feeder - 8 Spoke Wire Grill - 0 to 3 lb. (1.36kg); adjustable capacity; slide shut off; designed to mount on chain feeder/includes all necessary hardware. **Includes 450594 feed restrictor.**	4.8	2.2	
455160-Q4	PXR Rooster Feeder - 8 Spoke Wire Grill - 0 to 3 lb. (1.36kg); adjustable capacity; slide shut off; designed to mount on chain feeder/includes all necessary hardware. **Includes 450594 feed restrictor.**	19.0	8.6	
450594	Optional feed restrictor for all rooster feeders.	0.1	0.0	

Feed Restrictors are not included and if desired must be ordered separately unless otherwise stated.

Feeders include non-swing hardware for attachment to smooth tube w/ exception of 455160.

For use on Ribbed Tube, Need to Order 451061 (2 per Pan)

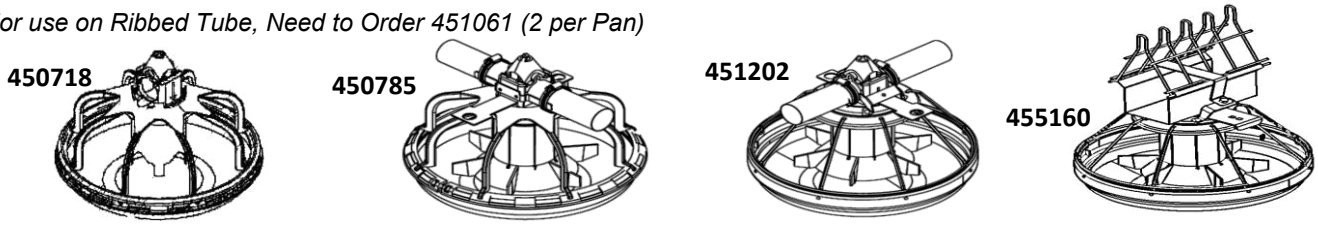

Toll-free: 1-800-99VALCO
Phone: (+1) 419-678-8731
Fax: (+1) 419-678-2200

TUBES - TUBE CLAMP & HANGER - AUGER

SMOOTH TUBES (Tube Clamps Required)

CATALOG #	ITEM DESCRIPTION	SHIP WEIGHT LBS.	SHIP WEIGHT KG.	LIST PRICE
450224	9' Tube - 1 Hole	6.0	2.7	
450081	9' Tube - 2 Holes	6.0	2.7	
451033	9' Tube - 3 Holes	6.0	2.7	
450145	9' Tube - 4 Holes	6.4	2.9	
451047	10' Tube - 0 Holes	8.0	3.6	
450082	10' Tube - 2 Holes	7.2	3.3	
450083	10' Tube - 3 Holes	7.2	3.3	
450084	10' Tube - 4 Holes	7.6	3.4	

TUBE CLAMP & HANGERS

451040	1 3/4" Feeder Tube Clamp	0.2	0.1	
450123	Tube Hanger - for Smooth Tube	0.1	0.1	
450076	Tube Hanger - Scissors Type for Smooth Tube Only	0.3	0.1	

AUGER

450450-205	205' Roll - 1.438" O.D. Auger	71.8	32.5	
450450-225	225' Roll - 1.438" O.D. Auger	78.8	35.7	
450450-245	245' Roll - 1.438" O.D. Auger	85.8	38.9	
450450-265	265' Roll - 1.438" O.D. Auger	92.8	42.1	
450450-285	285' Roll - 1.438" O.D. Auger	99.8	45.2	
450450-305	305' Roll - 1.438" O.D. Auger	106.8	48.4	
450450-325	325' Roll - 1.438" O.D. Auger	113.8	51.6	
450450-345	345' Roll - 1.438" O.D. Auger	120.8	54.8	
450450-365	365' Roll - 1.438" O.D. Auger	127.8	57.9	
450450-385	385' Roll - 1.438" O.D. Auger	134.8	61.1	
450450-405	405' Roll - 1.438" O.D. Auger	141.5	64.2	
450450-425	425' Roll - 1.438" O.D. Auger	148.8	67.5	
450450-445	445' Roll - 1.438" O.D. Auger	155.8	70.6	
450450-465	465' Roll - 1.438" O.D. Auger	162.8	73.8	
450450-485	485' Roll - 1.438" O.D. Auger	169.8	77.0	
450450-505	505' Roll - 1.438" O.D. Auger	176.8	80.2	
450450-540	540' Roll - 1.438" O.D. Auger	189.0	85.7	
450450-565	565' Roll - 1.438" O.D. Auger	198.0	89.8	
450450-600	600' Roll - 1.438" O.D. Auger	210.0	95.3	
450450-650	650' Roll - 1.438" O.D. Auger	227.5	103.2	

Auger must be ordered in full length rolls.

Toll-free: 1-800-99VALCO
Phone: (+1) 419-678-8731
Fax: (+1) 419-678-2200

FEED TUBES - RIBBED TUBE

RIBBED TUBES (Tube Clamps Required)

455626	9' Tube - 3 Holes	7.5	3.4	
450920	9' Tube - 4 Holes	7.4	3.4	
451000	10' Tube - No Holes	8.2	3.7	
450908	10' Tube - 2 Holes	8.2	3.7	
450909	10' Tube - 3 Holes	8.2	3.7	
450910	10' Tube - 4 Holes	8.2	3.7	
451005	12' Tube - 3 Holes	10.9	4.9	
451005-Q120	12' Tube - 3 Holes - 120 Piece Skid Quantity	1,164.0	528.0	
450924	12' Tube - 4 Holes	9.7	4.4	
450924-Q120	12' Tube - 4 Holes - 120 Piece Skid Quantity	1,164.0	528.0	
450925	12' Tube - 5 Holes	9.7	4.4	
450925-Q120	12' Tube - 5 Holes - 120 Piece Skid Quantity	1,164.0	528.0	

CONTROL RIBBED TUBES (Tube Clamps Required)

455628	9' Tube - 3 Holes	7.5	3.4	
455219	9' Tube - 4 Holes	7.4	3.4	
455223	10' Tube - 4 Holes	8.2	3.7	

TUBE CLAMP & HANGERS

451040	1 3/4" Feeder Tube Clamp - (Ribbed & Smooth)	0.2	0.1	
450826	Tube Hanger - for Ribbed Tube	0.1	0.1	

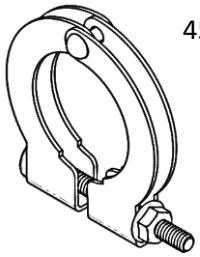

451040

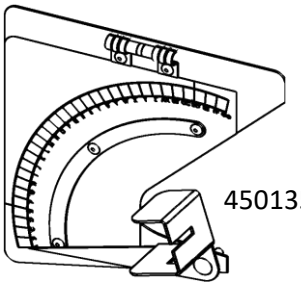

450135

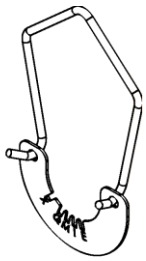

451085

Gauge

450135	Gauge for Tube Indexing	2.1	0.9	
451085	Tube Hanger for Index Line	0.2	0.1	

Anti-Swing Kits

451007	Anti-Swing Kit for Smooth Tube (Includes two clamps) - PXR	0.3	0.1	
451063	Anti-Swing Kit for Ribbed Tube (Includes two clamps) - PXR	0.1	0.1	

Toll-free: 1-800-99VALCO
Phone: (+1) 419-678-8731
Fax: (+1) 419-678-2200

ANTI-ROOST - TUBE INDEXING

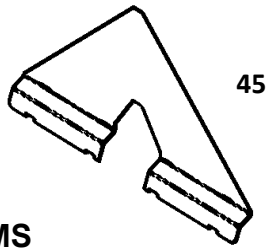

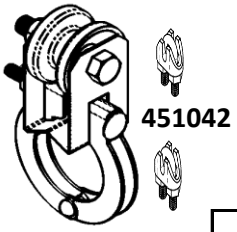

ANTI-ROOST ITEMS

CATALOG #	ITEM DESCRIPTION	SHIP WEIGHT LBS.	SHIP WEIGHT KG.	LIST PRICE
451042	Anti-Roost Insulator Bracket Assembly with 2 Cable Clamps	0.4	0.2	
450437	Spring for Anti-Roost Shocker Wire	0.1	0.1	
VG342	1/16" Anti-Roost Wire	0.0	0.0	
VC353	1/16" Clamp for Anti-Roost Wire	0.0	0.0	
451034	FUZE / PXR Pan Anti-Roost (Need (4) 451008 per one)	1.0	0.4	
451008	1 3/4" SS Tube Clamp *(4 needed for 451034)*	0.1	0.0	

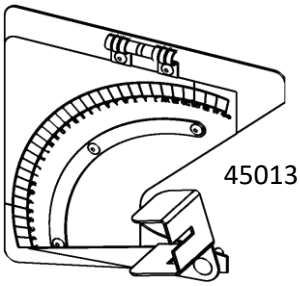

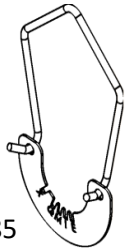

TUBE INDEXING

CATALOG #	ITEM DESCRIPTION	SHIP WEIGHT LBS.	SHIP WEIGHT KG.	LIST PRICE
450135	Indexing Gauge Carton	2.1	0.9	
451085	Hanger Assembly for indexed ribbed tube.	0.2	0.1	

Toll-free: 1-800-99VALCO
Phone: (+1) 419-678-8731
Fax: (+1) 419-678-2200

POULTRY - 2/3/4 PANS PER 9' TUBE - SINGLE BOOT / END FILL

		Items to Select											Anti-Roost		
Feed Line Length	Feed Line Length	End House Control Pan	1/2 HP Motor & Gearbox	Feed Hopper	Single Outlet Boot	Pan Feeder Assy			9' Tube	1.75" Tube Clamp (Ribbed or Smooth)	1.75" Tube Hanger Ribbed - 450826 Smooth - 450123 / 450076	1.438" OD Auger (Feet)	Insulator Bracket & Clamp	Spring for Anti-Roost Wire	1/16" Anti-Roost Wire
Feet	Meter				450810	2 Pan	3 Pan	4 Pan		451040		450450-	451042	450437	VG342
108	33	1	1	1	1	24	36	48	12	11	14	108	2	2	130
117	36	1	1	1	1	26	39	52	13	12	15	117	2	2	140
126	39	1	1	1	1	28	42	56	14	13	16	126	2	2	150
135	42	1	1	1	1	30	45	60	15	14	17	136	2	2	160
144	45	1	1	1	1	32	48	64	16	15	18	144	3	3	170
153	48	1	1	1	1	34	51	68	17	16	20	153	3	3	180
162	51	1	1	1	1	36	54	72	18	17	21	162	3	3	190
171	54	1	1	1	1	38	57	76	19	18	22	171	3	3	200
180	57	1	1	1	1	40	60	80	20	19	23	180	3	3	200
189	60	1	1	1	1	42	63	84	21	20	24	189	4	4	210
198	63	1	1	1	1	44	66	88	22	21	25	198	4	4	220
207	66	1	1	1	1	46	69	92	23	22	26	207	4	4	230
216	69	1	1	1	1	48	72	96	24	23	27	216	4	4	240
225	72	1	1	1	1	50	75	100	25	24	29	225	4	4	250
234	75	1	1	1	1	52	78	104	26	25	30	234	5	5	260
243	78	1	1	1	1	54	81	108	27	26	31	243	5	5	270
252	81	1	1	1	1	56	84	112	28	27	32	252	5	5	280
261	84	1	1	1	1	58	87	116	29	28	33	261	5	5	290
270	87	1	1	1	1	60	90	120	30	29	34	270	5	5	290
279	90	1	1	1	1	62	93	124	31	30	35	279	6	6	300
288	93	1	1	1	1	64	96	128	32	31	36	288	6	6	310
297	96	1	1	1	1	66	99	132	33	32	38	297	6	6	320
306	99	1	1	1	1	68	102	136	34	33	39	306	6	6	330
315	102	1	1	1	1	70	105	140	35	34	40	315	6	6	340
324	105	1	1	1	1	72	108	144	36	35	41	324	7	7	350
333	108	1	1	1	1	74	111	148	37	36	42	333	7	7	360
342	111	1	1	1	1	76	114	152	38	37	43	342	7	7	370
351	114	1	1	1	1	78	117	156	39	38	44	351	7	7	380
360	117	1	1	1	1	80	120	160	40	39	45	360	7	7	380
369	120	1	1	1	1	82	123	164	41	40	47	369	8	8	390
378	123	1	1	1	1	84	126	168	42	41	48	378	8	8	400
387	126	1	1	1	1	86	129	172	43	42	49	387	8	8	410
396	129	1	1	1	1	88	132	176	44	43	50	396	8	8	420
405	132	1	1	1	1	90	135	180	45	44	51	405	8	8	430
414	135	1	1	1	1	92	138	184	46	45	52	414	9	9	440
423	138	1	1	1	1	94	141	188	47	46	53	423	9	9	450
432	141	1	1	1	1	96	144	192	48	47	54	432	9	9	460
441	144	1	1	1	1	98	147	196	49	48	56	441	9	9	470
450	147	1	1	1	1	100	150	200	50	49	57	450	9	9	470
459	150	1	1	1	1	102	153	204	51	50	58	459	10	10	480
468	153	1	1	1	1	104	156	208	52	51	59	468	10	10	490
477	156	1	1	1	1	106	159	212	53	52	60	477	10	10	500
486	159	1	1	1	1	108	162	216	54	53	61	486	10	10	510
495	162	1	1	1	1	110	165	220	55	54	62	495	10	10	520
504	165	1	1	1	1	112	168	224	56	55	63	504	11	11	530

Toll-free: 1-800-99VALCO
Phone: (+1) 419-678-8731
Fax: (+1) 419-678-2200

POULTRY - 2/3/4 PANS PER 9' TUBE - DOUBLE BOOT / CENTER FILL

		Items to Select											Anti-Roost		
Feed Line Length	Feed Line Length	End House Control Pan	1/2 HP Motor & Gearbox	Feed Hopper	Double Outlet Boot	Pan Feeder Assy			9' Tube	1.75" Tube Clamp (Ribbed or Smooth)	1.75" Tube Hanger Ribbed - 450826 Smooth - 450123 / 450076	1.438" OD Auger (Feet)	Insulator Bracket & Clamp	Spring for Anti-Roost Wire	1/16" Anti-Roost Wire
Feet	Meter				450800	2 Pan	3 Pan	4 Pan		451040		450450-	451042	450437	VG342
198	60	2	2	1	1	44	66	88	22	18	25	198	4	4	220
207	63	2	2	1	1	46	69	92	23	19	26	207	4	4	230
216	66	2	2	1	1	48	72	96	24	20	27	216	4	4	240
225	69	2	2	1	1	50	75	100	25	21	28	225	4	4	250
234	72	2	2	1	1	52	78	104	26	22	29	234	4	4	260
243	75	2	2	1	1	54	81	108	27	23	30	243	4	4	270
252	78	2	2	1	1	56	84	112	28	24	32	252	4	4	280
261	81	2	2	1	1	58	87	116	29	25	33	261	4	4	290
270	84	2	2	1	1	60	90	120	30	26	34	270	4	4	290
279	87	2	2	1	1	62	93	124	31	25	35	279	6	6	300
288	90	2	2	1	1	64	96	128	32	26	36	288	6	6	310
297	93	2	2	1	1	66	99	132	33	27	37	297	6	6	320
306	96	2	2	1	1	68	102	136	34	28	38	306	6	6	330
315	99	2	2	1	1	70	105	140	35	29	39	315	6	6	340
324	102	2	2	1	1	72	108	144	36	30	41	324	6	6	350
333	105	2	2	1	1	74	111	148	37	31	42	333	6	6	360
342	108	2	2	1	1	76	114	152	38	32	43	342	6	6	370
351	111	2	2	1	1	78	117	156	39	33	44	351	6	6	380
360	114	2	2	1	1	80	120	160	40	34	45	360	6	6	380
369	117	2	2	1	1	82	123	164	41	33	46	369	8	8	390
378	120	2	2	1	1	84	126	168	42	34	47	378	8	8	400
387	123	2	2	1	1	86	129	172	43	35	48	387	8	8	410
396	126	2	2	1	1	88	132	176	44	36	50	396	8	8	420
405	129	2	2	1	1	90	135	180	45	37	51	405	8	8	430
414	132	2	2	1	1	92	138	184	46	38	52	414	8	8	440
423	135	2	2	1	1	94	141	188	47	39	53	423	8	8	450
432	138	2	2	1	1	96	144	192	48	40	54	432	8	8	460
441	141	2	2	1	1	98	147	196	49	41	55	441	8	8	470
450	144	2	2	1	1	100	150	200	50	42	56	450	8	8	470
459	147	2	2	1	1	102	153	204	51	41	57	459	10	10	480
468	150	2	2	1	1	104	156	208	52	42	59	468	10	10	490
477	153	2	2	1	1	106	159	212	53	43	60	477	10	10	500
486	156	2	2	1	1	108	162	216	54	44	61	486	10	10	510
495	159	2	2	1	1	110	165	220	55	45	62	495	10	10	520
504	162	2	2	1	1	112	168	224	56	46	63	504	10	10	530
513	165	2	2	1	1	114	171	228	57	47	64	513	10	10	540
522	168	2	2	1	1	116	174	232	58	48	65	522	10	10	550
531	171	2	2	1	1	118	177	236	59	49	66	531	10	10	560
540	174	2	2	1	1	120	180	240	60	50	68	540	10	10	560
549	177	2	2	1	1	122	183	244	61	49	69	549	12	12	570
558	180	2	2	1	1	124	186	248	62	50	70	558	12	12	580
567	183	2	2	1	1	126	189	252	63	51	71	567	12	12	590
576	186	2	2	1	1	128	192	256	64	52	72	576	12	12	600
585	189	2	2	1	1	130	195	260	65	53	73	585	12	12	610
594	192	2	2	1	1	132	198	264	66	54	74	594	12	12	620

Toll-free: 1-800-99VALCO
Phone: (+1) 419-678-8731
Fax: (+1) 419-678-2200

POULTRY- 2/3/4 PANS PER 10' TUBE - SINGLE BOOT / END FILL

		Items to Select											Anti-Roost		
Feed Line Length	Feed Line Length	End House Control Pan	1/2 HP Motor & Gearbox	Feed Hopper	Single Outlet Boot	Pan Feeder Assy			10' Tube	1.75" Tube Clamp (Ribbed or Smooth)	1.75" Tube Hanger Ribbed - 450826 Smooth - 450123 / 450076	1.438" OD Auger (Feet)	Insulator Bracket & Clamp	Spring for Anti-Roost Wire	1/16" Anti-Roost Wire
Feet	Meter				450810	2 Pan	3 Pan	4 Pan		451040		450450-	451042	450437	VG342
60	18	1	1	1	1	12	18	24	6	5	8	60	1	1	80
70	21	1	1	1	1	14	21	28	7	6	9	70	1	1	90
80	24	1	1	1	1	16	24	32	8	7	10	80	1	1	100
90	28	1	1	1	1	18	27	36	9	8	11	90	1	1	110
100	31	1	1	1	1	20	30	40	10	9	13	100	1	1	120
110	34	1	1	1	1	22	33	44	11	9	14	110	2	2	130
120	37	1	1	1	1	24	36	48	12	10	15	120	2	2	140
130	40	1	1	1	1	26	39	52	13	11	16	130	2	2	150
140	43	1	1	1	1	28	42	56	14	12	18	140	2	2	160
150	46	1	1	1	1	30	45	60	15	13	19	150	2	2	170
160	49	1	1	1	1	32	48	64	16	13	20	160	3	3	180
170	52	1	1	1	1	34	51	68	17	14	21	170	3	3	190
180	55	1	1	1	1	36	54	72	18	15	23	180	3	3	200
190	58	1	1	1	1	38	57	76	19	16	24	190	3	3	210
200	61	1	1	1	1	40	60	80	20	17	25	200	3	3	220
210	64	1	1	1	1	42	63	84	21	17	26	210	4	4	230
220	67	1	1	1	1	44	66	88	22	18	28	220	4	4	240
230	70	1	1	1	1	46	69	92	23	19	29	230	4	4	250
240	73	1	1	1	1	48	72	96	24	20	30	240	4	4	260
250	76	1	1	1	1	50	75	100	25	21	31	250	4	4	270
260	79	1	1	1	1	52	78	104	26	21	33	260	5	5	280
270	82	1	1	1	1	54	81	108	27	22	34	270	5	5	290
280	85	1	1	1	1	56	84	112	28	23	35	280	5	5	300
290	88	1	1	1	1	58	87	116	29	24	36	290	5	5	310
300	92	1	1	1	1	60	90	120	30	25	38	300	5	5	320
310	95	1	1	1	1	62	93	124	31	25	39	310	6	6	330
320	98	1	1	1	1	64	96	128	32	26	40	320	6	6	340
330	101	1	1	1	1	66	99	132	33	27	41	330	6	6	350
340	104	1	1	1	1	68	102	136	34	28	43	340	6	6	360
350	107	1	1	1	1	70	105	140	35	29	44	350	6	6	370
360	110	1	1	1	1	72	108	144	36	29	45	360	7	7	380
370	113	1	1	1	1	74	111	148	37	30	46	370	7	7	390
380	116	1	1	1	1	76	114	152	38	31	48	380	7	7	400
390	119	1	1	1	1	78	117	156	39	32	49	390	7	7	410
400	122	1	1	1	1	80	120	160	40	33	50	400	7	7	420
410	125	1	1	1	1	82	123	164	41	33	51	410	8	8	430
420	128	1	1	1	1	84	126	168	42	34	53	420	8	8	440
430	131	1	1	1	1	86	129	172	43	35	54	430	8	8	450
440	134	1	1	1	1	88	132	176	44	36	55	440	8	8	460
450	137	1	1	1	1	90	135	180	45	37	56	450	8	8	470
460	140	1	1	1	1	92	138	184	46	37	58	460	9	9	480
470	143	1	1	1	1	94	141	188	47	38	59	470	9	9	490
480	146	1	1	1	1	96	144	192	48	39	60	480	9	9	500
490	149	1	1	1	1	98	147	196	49	40	51	490	9	9	510
500	153	1	1	1	1	100	150	200	50	41	63	500	9	9	520

Toll-free: 1-800-99VALCO
Phone: (+1) 419-678-8731
Fax: (+1) 419-678-2200

POULTRY- 2/3/4 PANS PER 10' TUBE - DOUBLE BOOT / CENTER FILL

		Items to Select											Anti-Roost		
Feed Line Length	Feed Line Length	End House Control Pan	1/2 HP Motor & Gearbox	Feed Hopper	Double Outlet Boot	Pan Feeder Assy			10' Tube	1.75" Tube Clamp (Ribbed or Smooth)	1.75" Tube Hanger Ribbed - 450826 Smooth - 450123 / 450076	1.438" OD Auger (Feet)	Insulator Bracket & Clamp	Spring for Anti-Roost Wire	1/16" Anti-Roost Wire
Feet	Meter				450800	2 Pan	3 Pan	4 Pan		451040		450450-	451042	450437	VG342
160	49	2	2	1	1	32	48	64	16	14	20	160	2	2	180
170	52	2	2	1	1	34	51	68	17	15	21	170	2	2	190
180	55	2	2	1	1	36	54	72	18	16	23	180	2	2	200
190	58	2	2	1	1	38	57	76	19	17	24	190	2	2	210
200	61	2	2	1	1	40	60	80	20	18	25	200	2	2	220
210	64	2	2	1	1	42	63	84	21	19	26	210	4	4	230
220	67	2	2	1	1	44	66	88	22	20	28	220	4	4	240
230	70	2	2	1	1	46	69	92	23	21	29	230	4	4	250
240	73	2	2	1	1	48	72	96	24	22	30	240	4	4	260
250	76	2	2	1	1	50	75	100	25	23	31	250	4	4	270
260	79	2	2	1	1	52	78	104	26	24	33	260	4	4	280
270	82	2	2	1	1	54	81	108	27	25	34	270	4	4	290
280	85	2	2	1	1	56	84	112	28	26	35	280	4	4	300
290	88	2	2	1	1	58	87	116	29	27	36	290	4	4	310
300	92	2	2	1	1	60	90	120	30	28	38	300	4	4	320
310	95	2	2	1	1	62	93	124	31	29	39	310	6	6	330
320	98	2	2	1	1	64	96	128	32	30	40	320	6	6	340
330	101	2	2	1	1	66	99	132	33	31	41	330	6	6	350
340	104	2	2	1	1	68	102	136	34	32	43	340	6	6	360
350	107	2	2	1	1	70	105	140	35	33	44	350	6	6	370
360	110	2	2	1	1	72	108	144	36	34	45	360	6	6	380
370	113	2	2	1	1	74	111	148	37	35	46	370	6	6	390
380	116	2	2	1	1	76	114	152	38	36	48	380	6	6	400
390	119	2	2	1	1	78	117	156	39	37	49	390	6	6	410
400	122	2	2	1	1	80	120	160	40	38	50	400	6	6	420
410	125	2	2	1	1	82	123	164	41	39	51	410	8	8	430
420	128	2	2	1	1	84	126	168	42	40	53	420	8	8	440
430	131	2	2	1	1	86	129	172	43	41	54	430	8	8	450
440	134	2	2	1	1	88	132	176	44	42	55	440	8	8	460
450	137	2	2	1	1	90	135	180	45	43	56	450	8	8	470
460	140	2	2	1	1	92	138	184	46	44	58	460	8	8	480
470	143	2	2	1	1	94	141	188	47	45	59	470	8	8	490
480	146	2	2	1	1	96	144	192	48	46	60	480	8	8	500
490	149	2	2	1	1	98	147	196	49	47	61	490	8	8	510
500	153	2	2	1	1	100	150	200	50	48	63	500	8	8	520
510	156	2	2	1	1	102	153	204	51	49	64	510	10	10	530
520	159	2	2	1	1	104	156	208	52	50	65	520	10	10	540
530	162	2	2	1	1	106	159	212	53	51	66	530	10	10	550
540	165	2	2	1	1	108	162	216	54	52	68	540	10	10	560
550	168	2	2	1	1	110	165	220	55	53	69	550	10	10	570
560	171	2	2	1	1	112	168	224	56	54	70	560	10	10	580
570	174	2	2	1	1	114	171	228	57	55	74	570	10	10	590
580	177	2	2	1	1	116	174	232	58	56	73	580	10	10	600
590	180	2	2	1	1	118	177	236	59	57	74	590	10	10	610
600	183	2	2	1	1	120	180	240	60	58	75	600	10	10	620

This page left intentionally blank

Toll-free: 1-800-99VALCO
Phone: (+1) 419-678-8731
Fax: (+1) 419-678-2200

SECTION 17
TURKEY PAN FEEDER

IN THIS CATALOG SECTION

PAGE NUMBER	CONTENTS
17-02	How to Place a Turkey Pan Feeder Order
17-03	Adult Turkey Control Pans, Feed Pans and Tubes & Accessories
17-04	Boots - Hoppers - Controls
17-05	Drives & Auger
17-06	Poult Control Pans
17-07	Poult Feeder Pans
17-08	Poult Smooth Tubes
17-09	Poult Ribbed Tubes
17-10	Anti Roost Items - Winched Feed Level Adjustment - Switches
17-11	Adult Turkey Feed Line Component Requirements End Fill - 3 Pans Per 20' of Tube
17-12	Adult Turkey Feed Line Component Requirements Center Fill - 3 Pans Per 20' of Tube
17-13	Adult Turkey Feed Line Component Requirements End Fill - 2 or 3 Pans Per 10' Tube
17-14	Adult Turkey Feed Line Component Requirements Center Fill - 2 or 3 Pans Per 10' Tube
17-15	Poult Feed Line Component Requirements End Fill - 2/3/4 Pans Per ' Tube
17-16	Poult Feed Line Component Requirements Center Fill - 2/3/4 Pans Per 9' Tube
17-17	Poult Feed Line Component Requirements End Fill - 2/3/4 Pans Per 10' Tube
17-18	Poult Feed Line Component Requirements Center Fill - 2/3/4 Pans Per 10' Tube

Toll-free: 1-800-99VALCO
Phone: (+1) 419-678-8731
Fax: (+1) 419-678-2200

HOW TO ORDER TURKEY PAN FEEDERS

- Recommended Bird Density Per Pan - See Chart Below:
- Determine the number of feed lines and type of line needed (end fill or center fill).
- Select feeder line components as specified by the chart. See components listing on pages 17-11 thru 17-18.
- A complete feeder line order should include the following items:
  - End house control pan (2 per center fill line) - also mid-house control pan if required.
  - Motor & Gearbox Drive Unit per end control pan - farm duty motor if V-belt drive is selected.
  - Boot or Hopper Base with feed hopper/upper hopper.
  - Turkey Pan Feeder units.
  - Adult Turkey Feeders and Poult Turkey Feeders fit on defferent feed tube sizes.
  - Feed line tubes. Note that two different tubes must be ordered for a 3 pans per 20' of tube feed line.
  - Tube clamps (if required) and tube hangers.
  - Auger - must be ordered in full length rolls.
  - Anti-Roost Items as needed.
  - Feed control Switches and/or miscellaneous items as needed.
  - Winched feed level adjustment items if needed.
- Feed delivery rate based on 40 lbs. per cubic foot (640 kg. per cubic meter) is approximately 20 pounds (9 kgs.) per minute at 358 RPM with full restrictor shaft and mash feed.

TURKEY PAN FEEDING RECOMMENDATIONS

Turkey Females	Age Weeks	Maximum Birds/Pan	Pan Dia. IN (CM)	Feeder Space IN (CM)	Pan Model	Part Numbers
Poults	0-5	65	13 (33)	40.8 (103.7)	PXP	460350
Poults	0-10	50	13 (33)	40.8 (103.7)	PXP	460350
Poults	0-5	70	14 (35.6)	44 (111.7)	Fuze Pro	Varied
Poults	0-10	55	14 (35.6)	44 (111.7)	Fuze Pro	Varied
Hens	5-15	80	17.5 (44.5)	55 (139.6)	PTF	460217/460280
Hens	5-18	70	17.5 (44.5)	55 (139.6)	PTF	460217/460280
Hens	5+	60	17.5 (44.5)	55 (139.6)	PTF	460217/460280
Turkey Males	**Age Weeks**	**Maximum Birds/Pan**	**Pan Diameter**	**Feeder Space IN (CM)**	**Pan Model**	**Part Numbers**
Poults	0-5	60	13 (33)	40.8 (103.7)	PXP	460350
Poults	0-10	40	13 (33)	40.8 (103.7)	PXP	460350
Poults	0-5	65	14 (35.6)	44 (111.7)	Fuze Pro	Varied
Poults	0-10	45	14 (35.6)	44 (111.7)	Fuze Pro	Varied
Toms	5-15	50	17.5 (44.5)	55 (139.6)	PTF	460217/460280
Toms	5-18	45	17.5 (44.5)	55 (139.6)	PTF	460217/460280
Toms	5+	40	17.5 (44.5)	55 (139.6)	PTF	460217/460280

Toll-free: 1-800-99VALCO
Phone: (+1) 419-678-8731
Fax: (+1) 419-678-2200

ADULT TURKEY CONTROL PANS & ACCESSORIES

CONTROL PANS

CATALOG #	ITEM DESCRIPTION	SHIP WEIGHT LBS.	SHIP WEIGHT KG.	LIST PRICE
460250	End Control Pan Unit - Direct Drive For 460217 Feeder - Mechanical Switch	19.3	8.7	
820022	Bird Attracting LED Light For Control Pans (Universal)	0.9	0.4	

PAN FEEDERS

460217	PTF Turkey Feeder - Plastic Pan Feeder (New Style)	8.5	3.9	
460280	PTF Turkey Feeder - 2 Piece Plastic Pan Feeder (New Style)	6.4	2.9	
460238	Replacement 2 Piece Turkey Tower for 460280	2.8	1.3	
460224	PTF Conversion Kit - Old to New. Includes pan shield, struts, tube support and hardware	6.2	2.8	

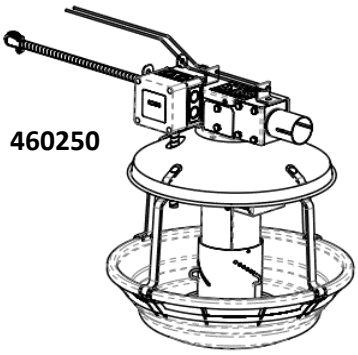

460250

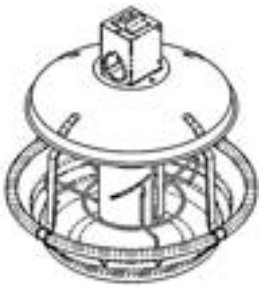

460217
PTF FEEDER - PLASTIC PAN
(Long Pan Support Strut)

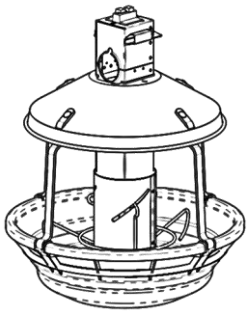

460280

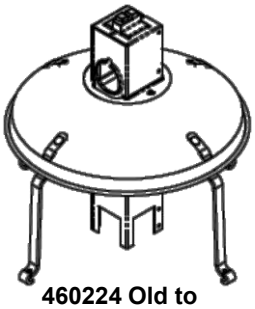

460224 Old to New Conversion Kit

ADULT TURKEY SMOOTH TUBE (TUBE CLAMP REQUIRED)

460124	10' Tube - No Hole with Bell	10.1	4.6	
460121	10' Tube - 1 Hole (for 3 pans per 20' - 80" Spacing)	10.1	4.6	
460122	10' Tube - 2 Hole (for 3 pans per 20' - 80" Spacing)	10.1	4.6	
460102	10' Tube - 2 Hole - 60" Spacing	10.1	4.6	
460123	10' Tube - 3 Hole - 40" Spacing	10.1	4.6	

Repair/Replacement Tubes Shipped prior to May 1, 2017

460101	10' Tube - 1 Hole (for 3 pans per 20' - 80" Spacing)	10.1	4.6	
460104	10' Tube - 2 Hole (for 3 pans per 20' - 80" Spacing)	10.1	4.6	
460103	10' Tube - 3 Hole - 40" Spacing	10.1	4.6	

TUBE CLAMP & HANGERS

460022	2" Tube Clamp	0.3	0.1	
720220	2" Tube Hanger	0.3	0.1	

Toll-free: 1-800-99VALCO
Phone: (+1) 419-678-8731
Fax: (+1) 419-678-2200

BOOTS - HOPPERS

BOOTS - ADULT TURKEY FEED LINES

CATALOG #	ITEM DESCRIPTION	SHIP WEIGHT LBS.	SHIP WEIGHT KG.	LIST PRICE
460300	Single Outlet Boot Assembly (use 100 / 200 lb. Galv. Hopper or 150 lb. Poly Hopper)	22.9	10.4	
460301	Double Outlet Boot Assembly (use 100 / 200 lb. Galv. Hopper or 150 lb. Poly Hopper)	32.0	14.5	

BOOTS - POULT FEED LINES

450810	Single Outlet Boot Assembly (use 100 / 200 lb. Galv. Hopper or 150 lb. Poly Hopper)	17.2	7.8	
450800	Double Outlet Boot Assembly (use 100 / 200 lb. Galv. Hopper or 150 lb. Poly Hopper)	27.2	12.3	

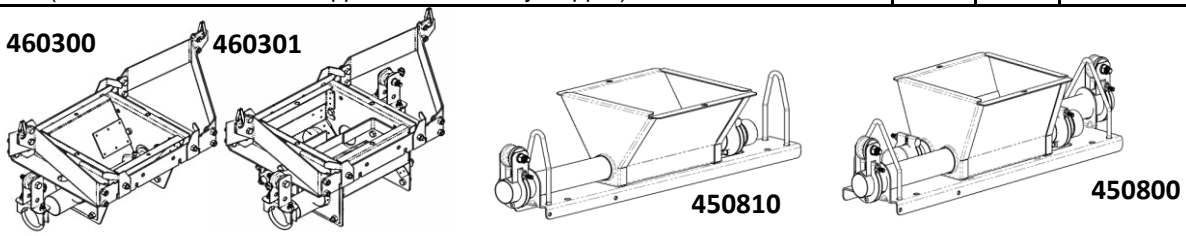

HOPPERS

451320	200 lb. Capacity Galvanized Feed Hopper, Slip-In	35.0	15.9	
451315	100 lb. Capacity Galvanized Feed Hopper, Slip-In	28.4	12.9	
451022	100 lb. Extension for Galvanized Feed Hopper (for 451315 or 451320)	14.8	6.7	
450804	Cover for Galvanized Feed Hopper	9.4	4.2	
451356	150 lb. Capacity Green Poly Feed Hopper Kit - Ships w/ Cone Assembled	8.2	3.7	
451357	150 lb. Capacity Green Poly Feed Hopper Kit - Ships w/ Cone Flat	30.5	13.8	
451355	150 lb. Capacity Green Poly Feed Hopper Lid	6.3	2.9	
460180	Hopper Suspension Kit, Slip-In * Only needed for boots sold prior to April 2018	8.0	3.6	

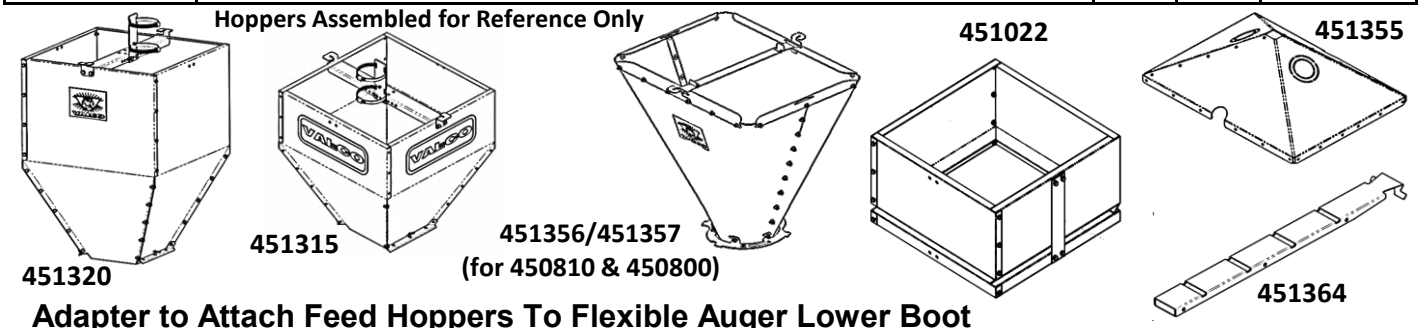

Adapter to Attach Feed Hoppers To Flexible Auger Lower Boot

730375	Lower boot adapter to attach to Broiler Feed Hoppers	2.6	1.2	

Hopper Level Control and Boot Switch

460057	Hopper Level Control Switch - Proximity	5.0	2.3	
720097	Adjustable-Mechanical hopper level control 220V, 20amp, 1-3phase, 50-60hz	4.8	2.2	
451364	Galv. Hanger for 720097 (Hopper Level Switch) - use with Poly Hopper	1.6	0.7	
730965	Boot Safety Switch - Mechanical 110-220v, 20 amp, 1 phase, 50-60hz	1.1	0.5	
455800	Boot Safety Switch Proximity switch, 0-60 sec. delay, adj. sensitivity, 1P/220v/50-60	4.0	1.8	

Toll-free: 1-800-99VALCO
Phone: (+1) 419-678-8731
Fax: (+1) 419-678-2200

DRIVES & AUGER

DIRECT DRIVE MOTOR & GEARBOX UNITS
60HZ - SINGLE PHASE - 115/230V

		SHIP WEIGHT		List Price
		LBS.	KG.	
450397	1/2 HP Direct Drive Motor & Gearbox - 226 RPM	40.6	18.4	
460025	1/2 HP Direct Drive Motor & Gearbox - 358 RPM	34.4	15.6	
450393	1/2 HP Direct Drive Motor & Gearbox - 441 RPM	35.5	16.1	
450287	1/2 HP Direct Drive Motor & Gearbox - 657 RPM	40.6	18.4	

DIRECT DRIVE MOTOR & GEARBOX UNITS
60HZ - 3 PHASE - 208-230/460V

450391	1/2 HP Direct Drive Motor & Gearbox - 358 RPM	32.0	14.5	
450395	1/2 HP Direct Drive Motor & Gearbox - 441 RPM	31.7	14.4	

DIRECT DRIVE MOTOR & GEARBOX UNITS
50HZ - SINGLE PHASE - 110/220V

450397	1/2 HP Direct Drive Motor & Gearbox - 187 RPM	40.6	18.4	
460025	1/2 HP Direct Drive Motor & Gearbox - 296 RPM	34.4	15.6	
450393	1/2 HP Direct Drive Motor & Gearbox - 368 RPM	35.5	16.1	
450287	1/2 HP Direct Drive Motor & Gearbox - 543 RPM	40.6	18.4	

DIRECT DRIVE MOTOR & GEARBOX UNITS
50HZ - 3 PHASE - 190/380V

450391	1/2 HP Direct Drive Motor & Gearbox - 296 RPM	32.0	14.5	
450395	1/2 HP Direct Drive Motor & Gearbox - 368 RPM	31.7	14.4	

PINION SPACER TOOL

740517	Pinion Spacer Tool	0.5	0.2	

AUGER

		SHIP WEIGHT		List Price
CATALOG #	ITEM DESCRIPTION	LBS.	KG.	
450450-205	205' Roll - 1.438" O.D. Auger	71.8	32.5	
450450-225	225' Roll - 1.438" O.D. Auger	78.8	35.7	
450450-245	245' Roll - 1.438" O.D. Auger	85.8	38.9	
450450-265	265' Roll - 1.438" O.D. Auger	92.8	42.1	
450450-285	285' Roll - 1.438" O.D. Auger	99.8	45.2	
450450-305	305' Roll - 1.438" O.D. Auger	106.8	48.4	
450450-325	325' Roll - 1.438" O.D. Auger	113.8	51.6	
450450-345	345' Roll - 1.438" O.D. Auger	120.8	54.8	
450450-365	365' Roll - 1.438" O.D. Auger	127.8	57.9	
450450-385	385' Roll - 1.438" O.D. Auger	134.8	61.1	
450450-405	405' Roll - 1.438" O.D. Auger	141.5	64.2	
450450-425	425' Roll - 1.438" O.D. Auger	148.8	67.5	
450450-445	445' Roll - 1.438" O.D. Auger	155.8	70.6	
450450-465	465' Roll - 1.438" O.D. Auger	162.8	73.8	
450450-485	485' Roll - 1.438" O.D. Auger	169.8	77.0	
450450-505	505' Roll - 1.438" O.D. Auger	176.8	80.2	
450450-540	540' Roll - 1.438" O.D. Auger	189.0	85.7	
450450-565	565' Roll - 1.438" O.D. Auger	198.0	89.8	
450450-600	600' Roll - 1.438" O.D. Auger	210.0	95.3	
450450-650	650' Roll - 1.438" O.D. Auger	227.5	103.2	

Auger must be ordered in full length rolls.

Toll-free: 1-800-99VALCO
Phone: (+1) 419-678-8731
Fax: (+1) 419-678-2200

CONTROL PANS for POULT FEEDERS

CONTROL PANS - with *MECHANICAL SWITCH*

CATALOG #	ITEM DESCRIPTION	SHIP WEIGHT LBS.	SHIP WEIGHT KG.	LIST PRICE
820331	FE1800RS Fuze ProLine Feeder 14" Standard Pan, 5 Spoke Grill	3.94	1.79	
820332	FE1800RLS Fuze ProLine Feeder 14" Shallow Pan, 5 Spoke Grill	2.10	0.95	
450950	End House Control Pan Unit With Mechanical Switch For All Feeders except Fuze and Fuze ProLine Feeders	17.14	7.77	
820022	Bird Attracting LED Light For Control Pans (Universal)	0.88	0.40	

FUZE CONTROL PANS - with *PROXIMITY SWITCH*

455923	FE1800RS Proximity Control Feeder 14" Standard Pan, 5 Spoke Grill	2.90	1.3	
455924	FE1800RLS Proximity Control Feeder 14" Shallow Pan, 5 Spoke Grill	2.90	1.3	

FUZE END CONTROL MOTOR MOUNT - MECHANICAL & PROXIMITY SENSOR CONTROL PANS

455960	End Control Motor Mount Plate With Electric Box - For All Fuze Pro Proximity Sensor or Mechanical Switch Control Pans ► **SINGLE PHASE 60/50 HZ (With relay)**	11.73	5.32	
455965	End Control Motor Mount Plate With Electric Box - For All Fuze Pro Proximity Sensor or Mechanical Switch Control Pans ► **1 or 3-PHASE 60/50 HZ (No relay)**	8.70	3.95	

Note: 455960 or 455965 required for all Fuze & Fuze ProLine Proximity Sensor and Mechanical Control Pans used at end of feeder line.

FUZE MID LINE CONTROL PAN RELAY - MECHANICAL & PROXIMITY SENSOR CONTROL PANS

750671	Mid Line Control Pan Electric Box with Relay - For All Fuze Pro Proximity Sensor & Mechanical Switch Control Pans ► **SINGLE PHASE 60/50 HZ**	1.62	0.73	

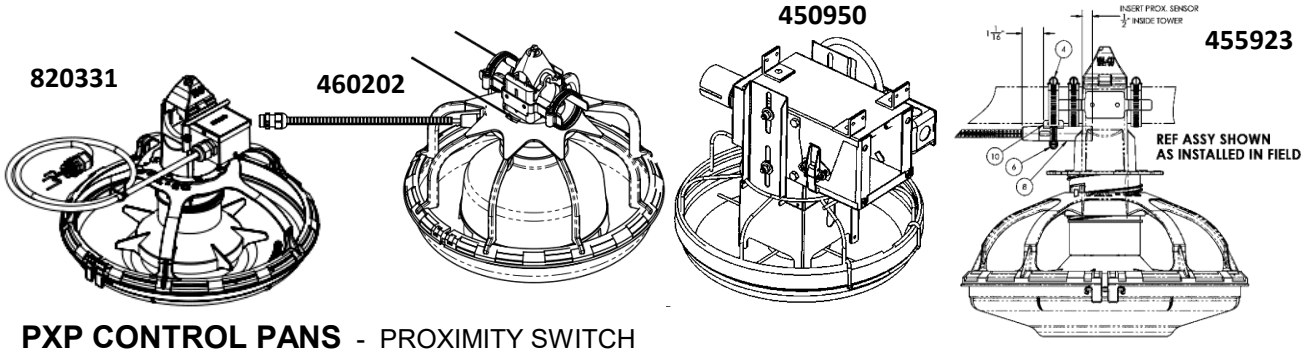

PXP CONTROL PANS - PROXIMITY SWITCH

460202	Turkey Starter Control Feeder High Capacity Pan, 8 Spoke Grill	2.50	1.1	
820022	Bird Attracting LED Light For Control Pans (Universal)	0.88	0.40	

END CONTROL MOTOR MOUNT - FOR PROXIMITY SENSOR CONTROL

450603	End Control Motor Mount Plate With Electric Box - For Proximity Sensor Control Pans - SINGLE PHASE 60/50 HZ	8.20	3.7	
450941	End Control Motor Mount Plate With Electric Box - For Proximity Sensor Control Pans - 3-PHASE 60/50 HZ	8.90	4.0	

Note: 450603 or 450941 required for all PXP Proximity Sensor Control Pans when used at end of feeder line.
Not required for mechanical switch end control pans.

Toll-free: 1-800-99VALCO
Phone: (+1) 419-678-8731
Fax: (+1) 419-678-2200

POULT PAN FEEDERS

Fuze ProLine® Feeders with One Piece Towers

CATALOG #	ITEM DESCRIPTION	FEEDER	SHIP WEIGHT LBS.	SHIP WEIGHT KG.	LIST PRICE
FE1800RS-1P	14" Fuze ProLine Standard Pan Assembly With 5 Spoke Grill	FLOOD	1.46	0.7	
FE1800RS-1PSO	With Shutoff		2.07	0.9	
FE1800RLS-1P	14" Fuze ProLine Shallow Pan Assembly With 5 Spoke Grill	FLOOD	1.70	0.8	
FE1800RLS-1PSO	With Shutoff		2.07	0.9	

Fuze ProLine® Feeders with Two Piece Towers (Standard Top)

FE1800RS	14" Fuze ProLine Standard Pan Assembly With 5 Spoke Grill	FLOOD	2.29	1.0	
FE1800RS-SO	With Shutoff		2.09	0.9	
FE1800RLS	14" Fuze ProLine Shallow Pan Assembly With 5 Spoke Grill	FLOOD	2.42	1.1	
FE1800RLS-SO	With Shutoff		2.09	0.9	

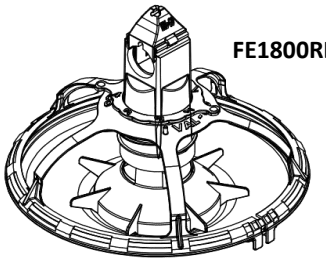

FE1800RLS

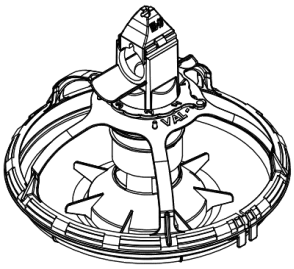

FE1800RS-SO

Turkey Starter Feeders

460350	Peak Poult Feeder, High Flood, Winchable Flood Shutoff - 8 Spoke, 13" Pan	1.85	0.8	

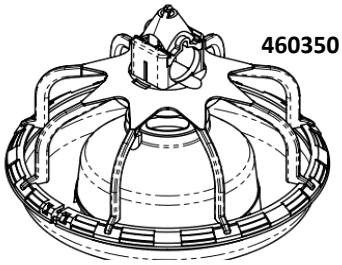

460350

Toll-free: 1-800-99VALCO
Phone: (+1) 419-678-8731
Fax: (+1) 419-678-2200

POULT FEED TUBES - SMOOTH TUBE

SMOOTH TUBES (Tube Clamps Required)

CATALOG #	ITEM DESCRIPTION	SHIP WEIGHT LBS.	SHIP WEIGHT KG.	LIST PRICE
450224	9' Tube - 1 Hole	6.0	2.7	
450081	9' Tube - 2 Holes	6.0	2.7	
451033	9' Tube - 3 Holes	6.0	2.7	
450145	9' Tube - 4 Holes	6.4	2.9	
455076	9' Tube - 4 Holes + 4 Centered Best Start Holes	6.0	2.7	
451047	10' Tube - 0 Holes	8.0	3.6	
450082	10' Tube - 2 Holes	7.2	3.3	
450083	10' Tube - 3 Holes	7.2	3.3	
450084	10' Tube - 4 Holes	7.6	3.4	
450072	10' Tube - 3 Holes + 3 Centered Best Start Holes	7.2	3.3	
451032	10' Tube - 4 Holes + 2 Centered Best Start Holes	7.2	3.3	
450099	10' Tube - 4 Holes + 4 Centered Best Start Holes	7.2	3.3	

CONTROL SMOOTH TUBES (Tube Clamps Required)

455267	9' Tube - 1 Hole	6.8	3.1	
455269	9' Tube - 2 Holes	6.8	3.1	
455271	9' Tube - 3 Holes	6.8	3.1	
455202	9' Tube - 4 Holes	6.0	2.7	
455273	9' Tube - 4 Holes + 4 Centered Best Start Holes	6.8	3.1	
455275	10' Tube - 2 Holes	7.6	3.4	
455277	10' Tube - 3 Holes	7.6	3.4	
455205	10' Tube - 4 Holes	6.6	3.0	
455279	10' Tube - 3 Holes + 3 Centered Best Start Holes	7.5	3.4	
455281	10' Tube - 4 Holes + 2 Centered Best Start Holes	7.5	3.4	
455283	10' Tube - 4 Holes + 4 Centered Best Start Holes	7.5	3.4	

TUBE CLAMP & HANGERS

451040	1 3/4" Feeder Tube Clamp (Ribbed & Smooth)	0.2	0.1	
450123	Tube Hanger - for Smooth Tube	0.1	0.1	
450076	Tube Hanger - Scissors Type for Smooth Tube Only	0.3	0.1	

POULT FEED TUBES - RIBBED TUBE

RIBBED TUBES (Tube Clamps Required)

455626	9' Tube - 3 Holes	7.5	3.4	
450920	9' Tube - 4 Holes	7.4	3.4	
455627	9' Tube - 3 Holes + 3 Centered Best Start Holes	7.5	3.4	
451031	9' Tube - 4 Holes + 2 Centered Best Start Holes	7.4	3.4	
450921	9' Tube - 4 Holes + 4 Centered Best Start Holes	7.4	3.4	
451000	10' Tube - No Holes	8.2	3.7	
450908	10' Tube - 2 Holes	8.2	3.7	
450909	10' Tube - 3 Holes	8.2	3.7	
450910	10' Tube - 4 Holes	8.2	3.7	
450911	10' Tube - 3 Holes + 3 Centered Best Start Holes	8.2	3.7	
455625	10' Tube - 4 Holes + 2 Centered Best Start Holes	8.2	3.7	
450913	10' Tube - 4 Holes + 4 Centered Best Start Holes	8.2	3.7	
451005	12' Tube - 3 Holes	10.9	4.9	
451005-Q120	12' Tube - 3 Holes - 120 Piece Skid Quantity	1,164.0	528.0	
450924	12' Tube - 4 Holes	9.7	4.4	
450924-Q120	12' Tube - 4 Holes - 120 Piece Skid Quantity	1,164.0	528.0	
450925	12' Tube - 5 Holes	9.7	4.4	
450925-Q120	12' Tube - 5 Holes - 120 Piece Skid Quantity	1,164.0	528.0	
450926	12' Tube - 4 Holes + 4 Centered Best Start Holes	9.7	4.4	
450926-Q120	12' Tube - 4 Holes + 4 Centered Best Start Holes - QTY 120	1,164.0	528.0	

CONTROL RIBBED TUBES (Tube Clamps Required)

455628	9' Tube - 3 Holes	7.5	3.4	
455219	9' Tube - 4 Holes	7.4	3.4	
455629	9' Tube - 3 Holes + 3 Centered Best Start Holes	7.5	3.4	
455630	9' Tube - 4 Holes + 2 Centered Best Start Holes	7.4	3.4	
455223	10' Tube - 4 Holes	8.2	3.7	
455624	10' Tube - 4 Holes + 2 Centered Best Start Holes	8.2	3.7	
455248	10' Tube - 4 Holes + 4 Centered Best Start Holes	8.2	3.7	

TUBE CLAMP & HANGERS

451040	1 3/4" Feeder Tube Clamp (Ribbed & Smooth)	0.2	0.1	
450826	Tube Hanger - for Ribbed Tube	0.1	0.1	

Toll-free: 1-800-99VALCO
Phone: (+1) 419-678-8731
Fax: (+1) 419-678-2200

WINCHED FEED LEVEL - ANTI ROOST

ANTI-ROOST ITEMS

CATALOG #	ITEM DESCRIPTION	SHIP WEIGHT LBS.	SHIP WEIGHT KG.	LIST PRICE
460075	Insulator Bracket & Tube Clamp Assembly - Adult Turkey Tube	0.7	0.3	
451042	Insulator Bracket & Tube Clamp Assembly - Poult Turkey Tube	0.4	0.2	
450437	Spring for Anti-Roost Shocker Wire	0.1	0.1	
VG342	1/16" Anti-Roost Wire	0.0	0.0	
VC353	1/16" Clamp for Anti-Roost Wire	0.0	0.0	
820461	Shocker Unit - 60hz - 110V	3.0	1.4	
820458	Shocker Unit - 50hz - 220V	2.8	1.3	
VR440	Shocker Unit - Solar	2.9	1.3	

WINCHED FEED LEVEL ADJUSTMENT ITEMS

CATALOG #	ITEM DESCRIPTION	SHIP WEIGHT LBS.	SHIP WEIGHT KG.	LIST PRICE
460072	600 lb. Winch Kit - For Adult Turkey Tube For maximum recommended length of 200 feet (61 meters).	10.0	4.5	
460187	600 lb. Winch Kit - For Poult Turkey Tube For maximum recommended length of 200 feet (61 meters).	10.4	4.7	
460071	Adjuster Drop Cable	0.05	0.0	
VC355	3/16" Galvanized Cable Clamp	0.06	0.0	
VC343	1/8" Galvanized 7x7 Cable - per Foot	0.03	0.0	
820025	Solid Galvanized Wire - 12.5 gauge - Per Foot	0.04	0.0	

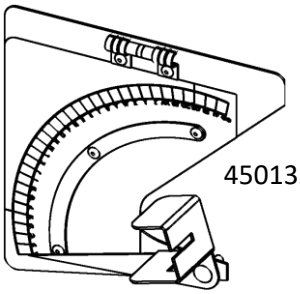

450135

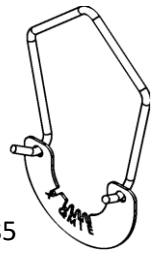

451085

TUBE INDEXING

CATALOG #	ITEM DESCRIPTION	SHIP WEIGHT LBS.	SHIP WEIGHT KG.	LIST PRICE
450135	Indexing Gauge Carton	2.08	0.9	
451085	Hanger Assembly for indexed ribbed tube.	0.17	0.1	

Toll-free: 1-800-99VALCO
Phone: (+1) 419-678-8731
Fax: (+1) 419-678-2200

ADULT TURKEY - 3 PANS PER 20' OF TUBE - SINGLE BOOT / END FILL

Feed Line Length	Feed Line Length	Items to Select										Anti-Roost			Winched Feed Level Adjust.			
		End House Control Pan	1/2 HP Motor & Gearbox or Motor	Feed Hopper/Upper Hopper	Single Outlet Boot	Turkey Pan Feeder Station	10' Tube - 1 Hole (3/20')	10' Tube - 2 Holes (3/20')	Tube Clamp	Tube Hanger	1.438" OD Auger (Feet)	Insulator Bracket & Clamp	Spring for Anti-Roost Wire	1/16" Anti-Roost Wire	600 lb. Winch Kit	Adjuster Drop Cable	3/16" Galvanized Cable Clamp	1/8" Galvanized 7x7 Cable
Feet	Meter				460300		460121	460122	460022	720220	450450-	460075	450437	VG342	460072	460071	VC355	VC343
60	18	1	1	1	1	9	3	3	5	8	60	1	1	80	1	18	9	80
70	21	1	1	1	1	10	4	3	6	9	70	1	1	90	1	20	10	90
80	24	1	1	1	1	12	4	4	7	10	80	1	1	100	1	24	12	100
90	27	1	1	1	1	13	5	4	8	12	90	1	1	110	1	26	13	110
100	30	1	1	1	1	15	5	5	9	13	100	2	2	120	1	30	15	120
110	33	1	1	1	1	16	6	5	10	14	110	2	2	130	1	32	16	130
120	36	1	1	1	1	18	6	6	11	15	120	2	2	140	1	36	18	140
130	39	1	1	1	1	19	7	6	12	17	130	2	2	150	1	38	19	150
140	42	1	1	1	1	21	7	7	13	18	140	2	2	160	1	42	21	160
150	45	1	1	1	1	22	8	7	14	19	150	3	3	170	1	44	22	170
160	48	1	1	1	1	24	8	8	15	20	160	3	3	180	1	48	24	180
170	51	1	1	1	1	25	9	8	16	22	170	3	3	190	1	50	25	190
180	54	1	1	1	1	27	9	9	17	23	180	3	3	200	1	54	27	200
190	57	1	1	1	1	28	10	9	18	24	190	3	3	210	1	56	28	210
200	60	1	1	1	1	30	10	10	19	25	200	4	4	220	1	60	30	220
210	63	1	1	1	1	31	11	10	20	27	210	4	4	230	2	62	31	230
220	66	1	1	1	1	33	11	11	21	28	220	4	4	240	2	66	33	240
230	69	1	1	1	1	34	12	11	22	29	230	4	4	250	2	68	34	250
240	72	1	1	1	1	36	12	12	23	30	240	4	4	260	2	72	36	260
250	75	1	1	1	1	37	13	12	24	32	250	5	5	270	2	74	37	270
260	78	1	1	1	1	39	13	13	25	33	260	5	5	280	2	78	39	280
270	81	1	1	1	1	40	14	13	26	34	270	5	5	290	2	80	40	290
280	84	1	1	1	1	42	14	14	27	35	280	5	5	300	2	84	42	300
290	87	1	1	1	1	43	15	14	28	37	290	6	6	310	2	86	43	310
300	90	1	1	1	1	45	15	15	29	38	300	6	6	320	2	90	45	320
310	93	1	1	1	1	46	16	15	30	39	310	6	6	330	2	92	46	330
320	96	1	1	1	1	48	16	16	31	40	320	6	6	340	2	96	48	340
330	99	1	1	1	1	49	17	16	32	42	330	6	6	350	2	98	49	350
340	102	1	1	1	1	51	17	17	33	43	340	7	7	360	2	102	51	360
350	105	1	1	1	1	52	18	17	34	44	350	7	7	370	2	104	52	370
360	108	1	1	1	1	54	18	18	35	45	360	7	7	380	2	108	54	380
370	111	1	1	1	1	55	19	18	36	47	370	7	7	390	2	110	55	390
380	114	1	1	1	1	57	19	19	37	48	380	7	7	400	2	114	57	400
390	117	1	1	1	1	58	20	19	38	49	390	8	8	410	2	116	58	410
400	120	1	1	1	1	60	20	20	39	50	400	8	8	420	2	120	60	420
410	123	1	1	1	1	61	21	20	40	52	410	8	8	430	3	122	61	430
420	126	1	1	1	1	63	21	21	41	53	420	8	8	440	3	126	63	440
430	129	1	1	1	1	64	22	21	42	54	430	8	8	450	3	128	64	450
440	132	1	1	1	1	66	22	22	43	55	440	9	9	460	3	132	66	460
450	135	1	1	1	1	67	23	22	44	57	450	9	9	470	3	134	67	470
460	138	1	1	1	1	69	23	23	45	58	460	9	9	480	3	138	69	480
470	141	1	1	1	1	70	24	23	46	59	470	9	9	490	3	140	70	490
480	144	1	1	1	1	72	24	24	47	60	480	9	9	500	3	144	72	500
490	147	1	1	1	1	73	25	24	48	62	490	10	10	510	3	146	73	510
500	150	1	1	1	1	75	25	25	49	63	500	10	10	520	3	150	75	520

Toll-free: 1-800-99VALCO
Phone: (+1) 419-678-8731
Fax: (+1) 419-678-2200

ADULT TURKEY - 3 PANS PER 20' OF TUBE - DOUBLE BOOT / CENTER FILL

Feed Line Length	Feed Line Length	Items to Select										Anti-Roost			Winched Feed Level Adjust.			
		End House Control Pan	1/2 HP Motor & Gearbox or Motor	Feed Hopper/Upper Hopper	Double Outlet Boot	Turkey Pan Feeder Station	10' Tube - 1 Hole (3/20')	10' Tube - 2 Holes (3/20')	Tube Clamp	Tube Hanger	1.438" OD Auger (Feet)	Insulator Bracket & Clamp	Spring for Anti-Roost Wire	1/16" Anti-Roost Wire	600 lb. Winch Kit	Adjuster Drop Cable	3/16" Galvanized Cable Clamp	1/8" Galvanized 7x7 Cable
Feet	Meter				460301		460121	460122	460022	720220	450450-	460075	450437	VG342	460072	460071	VC355	VC343
160	49	2	2	1	1	24	8	8	14	20	160	2	2	180	2	48	24	180
170	52	2	2	1	1	25	9	8	15	22	170	2	2	190	2	50	25	190
180	55	2	2	1	1	27	9	9	16	23	180	2	2	200	2	54	27	200
190	58	2	2	1	1	28	10	9	17	24	190	2	2	210	2	56	28	210
200	61	2	2	1	1	30	10	10	18	25	200	4	4	220	2	60	30	220
210	65	2	2	1	1	31	11	10	19	27	210	4	4	230	2	62	31	230
220	68	2	2	1	1	33	11	11	20	28	220	4	4	240	2	66	33	240
230	71	2	2	1	1	34	12	11	21	29	230	4	4	250	2	68	34	250
240	74	2	2	1	1	36	12	12	22	30	240	4	4	260	2	72	36	260
250	77	2	2	1	1	37	13	12	23	32	250	4	4	270	2	74	37	270
260	80	2	2	1	1	39	13	13	24	33	260	4	4	280	2	78	39	280
270	83	2	2	1	1	40	14	13	25	34	270	4	4	290	2	80	40	290
280	86	2	2	1	1	42	14	14	26	35	280	4	4	300	2	84	42	300
290	89	2	2	1	1	43	15	14	27	37	290	4	4	310	2	86	43	310
300	92	2	2	1	1	45	15	15	28	38	300	6	6	320	2	90	45	320
310	95	2	2	1	1	46	16	15	29	39	310	6	6	330	2	92	46	330
320	98	2	2	1	1	48	16	16	30	40	320	6	6	340	2	96	48	340
330	101	2	2	1	1	49	17	16	31	42	330	6	6	350	2	98	49	350
340	104	2	2	1	1	51	17	17	32	43	340	6	6	360	2	102	51	360
350	107	2	2	1	1	52	18	17	33	44	350	6	6	370	2	104	52	370
360	110	2	2	1	1	54	18	18	34	45	360	6	6	380	2	108	54	380
370	113	2	2	1	1	55	19	18	35	47	370	6	6	390	2	110	55	390
380	116	2	2	1	1	57	19	19	36	48	380	6	6	400	2	114	57	400
390	119	2	2	1	1	58	20	19	37	49	390	8	8	410	2	116	58	410
400	122	2	2	1	1	60	20	20	38	50	400	8	8	420	2	120	60	420
410	125	2	2	1	1	61	21	20	39	52	410	8	8	430	4	122	61	430
420	129	2	2	1	1	63	21	21	40	53	420	8	8	440	4	126	63	440
430	132	2	2	1	1	64	22	21	41	54	430	8	8	450	4	128	64	450
440	135	2	2	1	1	66	22	22	42	55	440	8	8	460	4	132	66	460
450	138	2	2	1	1	67	23	22	43	57	450	8	8	470	4	134	67	470
460	141	2	2	1	1	69	23	23	44	58	460	8	8	480	4	138	69	480
470	144	2	2	1	1	70	24	23	45	59	470	8	8	490	4	140	70	490
480	147	2	2	1	1	72	24	24	46	60	480	8	8	500	4	144	72	500
490	150	2	2	1	1	73	25	24	47	62	490	10	10	510	4	146	73	510
500	153	2	2	1	1	75	25	25	48	63	500	10	10	520	4	150	75	520
510	156	2	2	1	1	76	26	25	49	64	510	10	10	530	4	152	76	530
520	159	2	2	1	1	78	26	26	50	65	520	10	10	540	4	156	78	540
530	162	2	2	1	1	79	27	26	51	67	530	10	10	550	4	158	79	550
540	165	2	2	1	1	81	27	27	52	68	540	10	10	560	4	162	81	560
550	168	2	2	1	1	82	28	27	53	69	550	10	10	570	4	164	82	570
560	171	2	2	1	1	84	28	28	54	70	560	10	10	580	4	168	84	580
570	174	2	2	1	1	85	29	28	55	72	570	10	10	590	4	170	85	590
580	177	2	2	1	1	87	29	29	56	73	580	12	12	600	4	174	87	600
590	180	2	2	1	1	88	30	29	57	74	590	12	12	610	4	176	88	610
600	183	2	2	1	1	90	30	30	58	75	600	12	12	620	4	180	90	620

Toll-free: 1-800-99VALCO
Phone: (+1) 419-678-8731
Fax: (+1) 419-678-2200

ADULT TURKEY - 2 or 3 PANS PER 10' TUBE - SINGLE BOOT / END FILL

Feed Line Length	Feed Line Length	Items to Select										Anti-Roost			Winched Feed Level Adjust.					
		End House Control Pan	1/2 HP Motor & Gearbox or Motor	Feed Hopper/Upper Hopper	Single Outlet Boot	Turkey Pan Feeder Station		2 Hole - 460102 3 Hole - 460123	Tube Clamp	Tube Hanger	1.438" OD Auger (Feet)	Insulator Bracket & Clamp	Spring for Anti-Roost Wire	1/16" Anti-Roost Wire	600 lb. Winch Kit	Adjuster Drop Cable 2 Pan / 3 Pan		3/16" Galvanized Cable Clamp 2 Pan / 3 Pan		1/8" Galvanized 7x7 Cable
Feet	Meter				460300	2 Pan	3 Pan	10' Tube	460022	720220	450450-	460075	450437	VG342	460072	460071		VC355		VC343
60	18	1	1	1	1	12	18	6	5	8	60	1	1	80	1	24	36	12	18	80
70	21	1	1	1	1	14	21	7	6	9	70	1	1	90	1	28	42	14	21	90
80	24	1	1	1	1	16	24	8	7	10	80	1	1	100	1	32	48	16	24	100
90	27	1	1	1	1	18	27	9	8	12	90	1	1	110	1	36	54	18	27	110
100	30	1	1	1	1	20	30	10	9	13	100	2	2	120	1	40	60	20	30	120
110	33	1	1	1	1	22	33	11	10	14	110	2	2	130	1	44	66	22	33	130
120	36	1	1	1	1	24	36	12	11	15	120	2	2	140	1	48	72	24	36	140
130	39	1	1	1	1	26	39	13	12	17	130	2	2	150	1	52	78	26	39	150
140	42	1	1	1	1	28	42	14	13	18	140	2	2	160	1	56	84	28	42	160
150	45	1	1	1	1	30	45	15	14	19	150	3	3	170	1	60	90	30	45	170
160	48	1	1	1	1	32	48	16	15	20	160	3	3	180	1	64	96	32	48	180
170	51	1	1	1	1	34	51	17	16	22	170	3	3	190	1	68	102	34	51	190
180	54	1	1	1	1	36	54	18	17	23	180	3	3	200	1	72	108	36	54	200
190	57	1	1	1	1	38	57	19	18	24	190	3	3	210	1	76	114	38	57	210
200	60	1	1	1	1	40	60	20	19	25	200	4	4	220	1	80	120	40	60	220
210	63	1	1	1	1	42	63	21	20	27	210	4	4	230	2	84	126	42	63	230
220	66	1	1	1	1	44	66	22	21	28	220	4	4	240	2	88	132	44	66	240
230	69	1	1	1	1	46	69	23	22	29	230	4	4	250	2	92	138	46	69	250
240	72	1	1	1	1	48	72	24	23	30	240	4	4	260	2	96	144	48	72	260
250	75	1	1	1	1	50	75	25	24	32	250	5	5	270	2	100	150	50	75	270
260	78	1	1	1	1	52	78	26	25	33	260	5	5	280	2	104	156	52	78	280
270	81	1	1	1	1	54	81	27	26	34	270	5	5	290	2	108	162	54	81	290
280	84	1	1	1	1	56	84	28	27	35	280	5	5	300	2	112	168	56	84	300
290	87	1	1	1	1	58	87	29	28	37	290	6	6	310	2	116	174	58	87	310
300	90	1	1	1	1	60	90	30	29	38	300	6	6	320	2	120	180	60	90	320
310	93	1	1	1	1	62	93	31	30	39	310	6	6	330	2	124	186	62	93	330
320	96	1	1	1	1	64	96	32	31	40	320	6	6	340	2	128	192	64	96	340
330	99	1	1	1	1	66	99	33	32	42	330	6	6	350	2	132	198	66	99	350
340	102	1	1	1	1	68	102	34	33	43	340	7	7	360	2	136	204	68	102	360
350	105	1	1	1	1	70	105	35	34	44	350	7	7	370	2	140	210	70	105	370
360	108	1	1	1	1	72	108	36	35	45	360	7	7	380	2	144	216	72	108	380
370	111	1	1	1	1	74	111	37	36	47	370	7	7	390	2	148	222	74	111	390
380	114	1	1	1	1	76	114	38	37	48	380	7	7	400	2	152	228	76	114	400
390	117	1	1	1	1	78	117	39	38	49	390	8	8	410	2	156	234	78	117	410
400	120	1	1	1	1	80	120	40	39	50	400	8	8	420	2	160	240	80	120	420
410	123	1	1	1	1	82	123	41	40	52	410	8	8	430	3	164	246	82	123	430
420	126	1	1	1	1	84	126	42	41	53	420	8	8	440	3	168	252	84	126	440
430	129	1	1	1	1	86	129	43	42	54	430	8	8	450	3	172	258	86	129	450
440	132	1	1	1	1	88	132	44	43	55	440	9	9	460	3	176	264	88	132	460
450	135	1	1	1	1	90	135	45	44	57	450	9	9	470	3	180	270	90	135	470
460	138	1	1	1	1	92	138	46	45	58	460	9	9	480	3	184	276	92	138	480
470	141	1	1	1	1	94	141	47	46	59	470	9	9	490	3	188	282	94	141	490
480	144	1	1	1	1	96	144	48	47	60	480	9	9	500	3	192	288	96	144	500
490	147	1	1	1	1	98	147	49	48	62	490	10	10	510	3	196	294	98	147	510
500	150	1	1	1	1	100	150	50	49	63	500	10	10	520	3	200	300	100	150	520

Toll-free: 1-800-99VALCO
Phone: (+1) 419-678-8731
Fax: (+1) 419-678-2200

ADULT TURKEY - 2 or 3 PANS PER 10' TUBE - DOUBLE BOOT / CENTER FILL

Feed Line Length	Feed Line Length	Items to Select										Anti-Roost			Winched Feed Level Adjust.					
		End House Control Pan	1/2 HP Motor & Gearbox or Motor	Feed Hopper/Upper Hopper	Single Outlet Boot	Turkey Pan Feeder Station		2 Hole - 460102 3 Hole - 460123	Tube Clamp	Tube Hanger	1.438" OD Auger (Feet)	Insulator Bracket & Clamp	Spring for Anti-Roost Wire	1/16" Anti-Roost Wire	600 lb. Winch Kit	Adjuster Drop Cable 2 Pan / 3 Pan		3/16" Galvanized Cable Clamp 2 Pan / 3 Pan		1/8" Galvanized 7x7 Cable
Feet	Meter				460300	2 Pan	3 Pan	10' Tube	460022	720220	450450-	460075	450437	VG342	460072	460071		VC355		VC343
160	49	2	2	1	1	32	48	16	14	20	160	2	2	180	2	64	96	32	48	180
170	52	2	2	1	1	34	51	17	15	22	170	2	2	190	2	68	102	34	51	190
180	55	2	2	1	1	36	54	18	16	23	180	2	2	200	2	72	108	36	54	200
190	58	2	2	1	1	38	57	19	17	24	190	2	2	210	2	76	114	38	57	210
200	61	2	2	1	1	40	60	20	18	25	200	4	4	220	2	80	120	40	60	220
210	64	2	2	1	1	42	63	21	19	27	210	4	4	230	2	84	126	42	63	230
220	67	2	2	1	1	44	66	22	20	28	220	4	4	240	2	88	132	44	66	240
230	70	2	2	1	1	46	69	23	21	29	230	4	4	250	2	92	138	46	69	250
240	73	2	2	1	1	48	72	24	22	30	240	4	4	260	2	96	144	48	72	260
250	76	2	2	1	1	50	75	25	23	32	250	4	4	270	2	100	150	50	75	270
260	79	2	2	1	1	52	78	26	24	33	260	4	4	280	2	104	156	52	78	280
270	82	2	2	1	1	54	81	27	25	34	270	4	4	290	2	108	162	54	81	290
280	85	2	2	1	1	56	84	28	26	35	280	4	4	300	2	112	168	56	84	300
290	88	2	2	1	1	58	87	29	27	37	290	4	4	310	2	116	174	58	87	310
300	91	2	2	1	1	60	90	30	28	38	300	6	6	320	2	120	180	60	90	320
310	94	2	2	1	1	62	93	31	29	39	310	6	6	330	2	124	186	62	93	330
320	97	2	2	1	1	64	96	32	30	40	320	6	6	340	2	128	192	64	96	340
330	100	2	2	1	1	66	99	33	31	42	330	6	6	350	2	132	198	66	99	350
340	103	2	2	1	1	68	102	34	32	43	340	6	6	360	2	136	204	68	102	360
350	106	2	2	1	1	70	105	35	33	44	350	6	6	370	2	140	210	70	105	370
360	109	2	2	1	1	72	108	36	34	45	360	6	6	380	2	144	216	72	108	380
370	112	2	2	1	1	74	111	37	35	47	370	6	6	390	2	148	222	74	111	390
380	115	2	2	1	1	76	114	38	36	48	380	6	6	400	2	152	228	76	114	400
390	118	2	2	1	1	78	117	39	37	49	390	8	8	410	2	156	234	78	117	410
400	121	2	2	1	1	80	120	40	38	50	400	8	8	420	2	160	240	80	120	420
410	124	2	2	1	1	82	123	41	39	52	410	8	8	430	4	164	246	82	123	430
420	127	2	2	1	1	84	126	42	40	53	420	8	8	440	4	168	252	84	126	440
430	130	2	2	1	1	86	129	43	41	54	430	8	8	450	4	172	258	86	129	450
440	133	2	2	1	1	88	132	44	42	55	440	8	8	460	4	176	264	88	132	460
450	136	2	2	1	1	90	135	45	43	57	450	8	8	470	4	180	270	90	135	470
460	139	2	2	1	1	92	138	46	44	58	460	8	8	480	4	184	276	92	138	480
470	142	2	2	1	1	94	141	47	45	59	470	8	8	490	4	188	282	94	141	490
480	145	2	2	1	1	96	144	48	46	60	480	8	8	500	4	192	288	96	144	500
490	148	2	2	1	1	98	147	49	47	62	490	10	10	510	4	196	294	98	147	510
500	151	2	2	1	1	100	150	50	48	63	500	10	10	520	4	200	300	100	150	520
510	154	2	2	1	1	102	153	51	49	64	510	10	10	530	4	204	306	102	153	530
520	157	2	2	1	1	104	156	52	50	65	520	10	10	540	4	208	312	104	156	540
530	160	2	2	1	1	106	159	53	51	67	530	10	10	550	4	212	318	106	159	550
540	163	2	2	1	1	108	162	54	52	68	540	10	10	560	4	216	324	108	162	560
550	166	2	2	1	1	110	165	55	53	69	550	10	10	570	4	220	330	110	165	570
560	169	2	2	1	1	112	168	56	54	70	560	10	10	580	4	224	336	112	168	580
570	172	2	2	1	1	114	171	57	55	72	570	10	10	590	4	228	342	114	171	590
580	175	2	2	1	1	116	174	58	56	73	580	12	12	600	4	232	348	116	174	600
590	178	2	2	1	1	118	177	59	57	74	590	12	12	610	4	236	354	118	177	610
600	181	2	2	1	1	120	180	60	58	75	600	12	12	620	4	240	360	120	180	620

Toll-free: 1-800-99VALCO
Phone: (+1) 419-678-8731
Fax: (+1) 419-678-2200

www.val-co.com

POULT TURKEY - 2/3/4 PANS PER 9' TUBE - SINGLE BOOT / END FILL

Feed Line Length	Feed Line Length	Items to Select											Anti-Roost			Winched Feed Level			
		End House Control Pan	1/2 HP Motor & Gearbox	Feed Hopper	Single Outlet Boot	Pan Feeder Assy (Page 17-07 for options)			9' Tube	1.75" Tube Clamp (Ribbed or Smooth)	1.75" Tube Hanger Ribbed - 450826 Smooth - 450123 / 450076	1.438" OD Auger (Feet)	Insulator Bracket & Clamp	Spring for Anti-Roost Wire	1/16" Anti-Roost Wire	600 lb. Winch Kit 460187			12.5 Gauge Solid Galvanized Wire
Feet	Meter				450810	2 Pan	3 Pan	4 Pan		451040		450450-	451042	450437	VG342	2 Pan	3 Pan	4 Pan	820025
108	33	1	1	1	1	24	36	48	12	11	14	108	2	2	130	1	1	1	108
117	36	1	1	1	1	26	39	52	13	12	15	117	2	2	140	1	1	1	90
126	39	1	1	1	1	28	42	56	14	13	16	126	2	2	150	1	1	1	100
135	42	1	1	1	1	30	45	60	15	14	17	136	2	2	160	1	1	1	110
144	45	1	1	1	1	32	48	64	16	15	18	144	3	3	170	1	1	1	120
153	48	1	1	1	1	34	51	68	17	16	20	153	3	3	180	1	1	1	130
162	51	1	1	1	1	36	54	72	18	17	21	162	3	3	190	1	1	1	140
171	54	1	1	1	1	38	57	76	19	18	22	171	3	3	200	1	1	1	150
180	57	1	1	1	1	40	60	80	20	19	23	180	3	3	200	1	1	1	160
189	60	1	1	1	1	42	63	84	21	20	24	189	4	4	210	1	1	1	170
198	63	1	1	1	1	44	66	88	22	21	25	198	4	4	220	1	1	1	180
207	66	1	1	1	1	46	69	92	23	22	26	207	4	4	230	2	2	2	190
216	69	1	1	1	1	48	72	96	24	23	27	216	4	4	240	2	2	2	200
225	72	1	1	1	1	50	75	100	25	24	29	225	4	4	250	2	2	2	210
234	75	1	1	1	1	52	78	104	26	25	30	234	5	5	260	2	2	2	220
243	78	1	1	1	1	54	81	108	27	26	31	243	5	5	270	2	2	2	230
252	81	1	1	1	1	56	84	112	28	27	32	252	5	5	280	2	2	2	240
261	84	1	1	1	1	58	87	116	29	28	33	261	5	5	290	2	2	2	250
270	87	1	1	1	1	60	90	120	30	29	34	270	5	5	290	2	2	2	260
279	90	1	1	1	1	62	93	124	31	30	35	279	6	6	300	2	2	2	270
288	93	1	1	1	1	64	96	128	32	31	36	288	6	6	310	2	2	2	280
297	96	1	1	1	1	66	99	132	33	32	38	297	6	6	320	2	2	2	290
306	99	1	1	1	1	68	102	136	34	33	39	306	6	6	330	2	2	2	300
315	102	1	1	1	1	70	105	140	35	34	40	315	6	6	340	2	2	2	310
324	105	1	1		1	72	108	144	36	35	41	324	7	7	350	2	2	2	320
333	108	1	1	1	1	74	111	148	37	36	42	333	7	7	360	2	2	2	330
342	111	1	1	1	1	76	114	152	38	37	43	342	7	7	370	2	2	2	340
351	114	1	1	1	1	78	117	156	39	38	44	351	7	7	380	2	2	2	350
360	117	1	1	1	1	80	120	160	40	39	45	360	7	7	380	2	2	2	360
369	120	1	1	1	1	82	123	164	41	40	47	369	8	8	390	2	2	2	370
378	123	1	1	1	1	84	126	168	42	41	48	378	8	8	400	2	2	2	380
387	126	1	1	1	1	86	129	172	43	42	49	387	8	8	410	2	2	2	390
396	129	1	1	1	1	88	132	176	44	43	50	396	8	8	420	2	2	2	400
405	132	1	1	1	1	90	135	180	45	44	51	405	8	8	430	3	3	3	410
414	135	1	1	1	1	92	138	184	46	45	52	414	9	9	440	3	3	3	420
423	138	1	1	1	1	94	141	188	47	46	53	423	9	9	450	3	3	3	430
432	141	1	1	1	1	96	144	192	48	47	54	432	9	9	460	3	3	3	440
441	144	1	1	1	1	98	147	196	49	48	56	441	9	9	470	3	3	3	450
450	147	1	1	1	1	100	150	200	50	49	57	450	9	9	470	3	3	3	460
459	150	1	1	1	1	102	153	204	51	50	58	459	10	10	480	3	3	3	470
468	153	1	1	1	1	104	156	208	52	51	59	468	10	10	490	3	3	3	480
477	156	1	1	1	1	106	159	212	53	52	60	477	10	10	500	3	3	3	490
486	159	1	1	1	1	108	162	216	54	53	61	486	10	10	510	3	3	3	500
495	162	1	1	1	1	110	165	220	55	54	62	495	10	10	520	3	3	3	510
504	165	1	1	1	1	112	168	224	56	55	63	504	11	11	530	3	3	3	520

Toll-free: 1-800-99VALCO
Phone: (+1) 419-678-8731
Fax: (+1) 419-678-2200

POULT TURKEY - 2/3/4 PANS PER 9' TUBE - DOUBLE BOOT / CENTER FILL

Feed Line Length	Feed Line Length	Items to Select											Anti-Roost			Winched Feed Level			
		End House Control Pan	1/2 HP Motor & Gearbox	Feed Hopper	Double Outlet Boot	Pan Feeder Assy (Page 17-07 for options)			9' Tube	1.75" Tube Clamp (Ribbed or Smooth)	1.75" Tube Hanger Ribbed - 450826 Smooth - 450123 / 450076	1.438" OD Auger (Feet)	Insulator Bracket & Clamp	Spring for Anti-Roost Wire	1/16" Anti-Roost Wire	600 lb. Winch Kit 460187			12.5 Gauge Solid Galvanized Wire
Feet	Meter				450800	2 Pan	3 Pan	4 Pan		451040		450450-	451042	450437	VG342	2 Pan	3 Pan	4 Pan	820025
198	60	2	2	1	1	44	66	88	22	18	25	198	4	4	220	2	2	2	198
207	63	2	2	1	1	46	69	92	23	19	26	207	4	4	230	2	2	2	207
216	66	2	2	1	1	48	72	96	24	20	27	216	4	4	240	2	2	2	216
225	69	2	2	1	1	50	75	100	25	21	28	225	4	4	250	2	2	2	225
234	72	2	2	1	1	52	78	104	26	22	29	234	4	4	260	2	2	2	234
243	75	2	2	1	1	54	81	108	27	23	30	243	4	4	270	2	2	2	243
252	78	2	2	1	1	56	84	112	28	24	32	252	4	4	280	2	2	2	252
261	81	2	2	1	1	58	87	116	29	25	33	261	4	4	290	2	2	2	261
270	84	2	2	1	1	60	90	120	30	26	34	270	4	4	290	2	2	2	270
279	87	2	2	1	1	62	93	124	31	25	35	279	6	6	300	2	2	2	279
288	90	2	2	1	1	64	96	128	32	26	36	288	6	6	310	2	2	2	288
297	93	2	2	1	1	66	99	132	33	27	37	297	6	6	320	2	2	2	297
306	96	2	2	1	1	68	102	136	34	28	38	306	6	6	330	2	2	2	306
315	99	2	2	1	1	70	105	140	35	29	39	315	6	6	340	2	2	2	315
324	102	2	2	1	1	72	108	144	36	30	41	324	6	6	350	2	2	2	324
333	105	2	2	1	1	74	111	148	37	31	42	333	6	6	360	2	2	2	333
342	108	2	2	1	1	76	114	152	38	32	43	342	6	6	370	2	2	2	342
351	111	2	2	1	1	78	117	156	39	33	44	351	6	6	380	2	2	2	351
360	114	2	2	1	1	80	120	160	40	34	45	360	6	6	380	2	2	2	360
369	117	2	2	1	1	82	123	164	41	33	46	369	8	8	390	2	2	2	369
378	120	2	2	1	1	84	126	168	42	34	47	378	8	8	400	2	2	2	378
387	123	2	2	1	1	86	129	172	43	35	48	387	8	8	410	2	2	2	387
396	126	2	2	1	1	88	132	176	44	36	50	396	8	8	420	2	2	2	396
405	129	2	2	1	1	90	135	180	45	37	51	405	8	8	430	4	4	4	405
414	132	2	2		1	92	138	184	46	38	52	414	8	8	440	4	4	4	414
423	135	2	2	1	1	94	141	188	47	39	53	423	8	8	450	4	4	4	423
432	138	2	2	1	1	96	144	192	48	40	54	432	8	8	460	4	4	4	432
441	141	2	2	1	1	98	147	196	49	41	55	441	8	8	470	4	4	4	441
450	144	2	2	1	1	100	150	200	50	42	56	450	8	8	470	4	4	4	450
459	147	2	2	1	1	102	153	204	51	41	57	459	10	10	480	4	4	4	459
468	150	2	2	1	1	104	156	208	52	42	59	468	10	10	490	4	4	4	468
477	153	2	2	1	1	106	159	212	53	43	60	477	10	10	500	4	4	4	477
486	156	2	2	1	1	108	162	216	54	44	61	486	10	10	510	4	4	4	486
495	159	2	2	1	1	110	165	220	55	45	62	495	10	10	520	4	4	4	495
504	162	2	2	1	1	112	168	224	56	46	63	504	10	10	530	4	4	4	504
513	165	2	2	1	1	114	171	228	57	47	64	513	10	10	540	4	4	4	513
522	168	2	2	1	1	116	174	232	58	48	65	522	10	10	550	4	4	4	522
531	171	2	2	1	1	118	177	236	59	49	66	531	10	10	560	4	4	4	531
540	174	2	2	1	1	120	180	240	60	50	68	540	10	10	560	4	4	4	540
549	177	2	2	1	1	122	183	244	61	49	69	549	12	12	570	4	4	4	549
558	180	2	2	1	1	124	186	248	62	50	70	558	12	12	580	4	4	4	558
567	183	2	2	1	1	126	189	252	63	51	71	567	12	12	590	4	4	4	567
576	186	2	2	1	1	128	192	256	64	52	72	576	12	12	600	4	4	4	576
585	189	2	2	1	1	130	195	260	65	53	73	585	12	12	610	4	4	4	585
594	192	2	2	1	1	132	198	264	66	54	74	594	12	12	620	4	4	4	594

Toll-free: 1-800-99VALCO
Phone: (+1) 419-678-8731
Fax: (+1) 419-678-2200

POULT TURKEY - 2/3/4 PANS PER 10' TUBE - SINGLE BOOT / END FILL

Feed Line Length	Feed Line Length	Items to Select											Anti-Roost			Winched Feed Level			
		End House Control Pan *(Page 17-06 for Options)*	1/2 HP Motor & Gearbox *(Page 17-05 for options)*	Feed Hopper *(Page 17-04 for Options)*	Single Outlet Boot	Pan Feeder Assy (Page 17-07 for options)			10' Tube *(Page 17-08 for Options)*	1.75" Tube Clamp (Ribbed or Smooth)	1.75" Tube Hanger Ribbed - 450826 Smooth - 450123 / 450076	1.438" OD Auger (Feet)	Insulator Bracket & Clamp	Spring for Anti-Roost Wire	1/16" Anti-Roost Wire	600 lb. Winch Kit 460187			12.5 Gauge Solid Galvanized Wire
Feet	Meter				450810	2 Pan	3 Pan	4 Pan		451040		450450-	451042	450437	VG342	2 Pan	3 Pan	4 Pan	820025
60	18	1	1	1	1	12	18	24	6	5	8	60	1	1	80	1	1	1	60
70	21	1	1	1	1	14	21	28	7	6	9	70	1	1	90	1	1	1	70
80	24	1	1	1	1	16	24	32	8	7	10	80	1	1	100	1	1	1	80
90	28	1	1	1	1	18	27	36	9	8	11	90	1	1	110	1	1	1	90
100	31	1	1	1	1	20	30	40	10	9	13	100	1	1	120	1	1	1	100
110	34	1	1	1	1	22	33	44	11	9	14	110	2	2	130	1	1	1	110
120	37	1	1	1	1	24	36	48	12	10	15	120	2	2	140	1	1	1	120
130	40	1	1	1	1	26	39	52	13	11	16	130	2	2	150	1	1	1	130
140	43	1	1	1	1	28	42	56	14	12	18	140	2	2	160	1	1	1	140
150	46	1	1	1	1	30	45	60	15	13	19	150	2	2	170	1	1	1	150
160	49	1	1	1	1	32	48	64	16	13	20	160	3	3	180	1	1	1	160
170	52	1	1	1	1	34	51	68	17	14	21	170	3	3	190	1	1	1	170
180	55	1	1	1	1	36	54	72	18	15	23	180	3	3	200	1	1	1	180
190	58	1	1	1	1	38	57	76	19	16	24	190	3	3	210	1	1	1	190
200	61	1	1	1	1	40	60	80	20	17	25	200	3	3	220	1	1	1	200
210	64	1	1	1	1	42	63	84	21	17	26	210	4	4	230	2	2	2	210
220	67	1	1	1	1	44	66	88	22	18	28	220	4	4	240	2	2	2	220
230	70	1	1	1	1	46	69	92	23	19	29	230	4	4	250	2	2	2	230
240	73	1	1	1	1	48	72	96	24	20	30	240	4	4	260	2	2	2	240
250	76	1	1	1	1	50	75	100	25	21	31	250	4	4	270	2	2	2	250
260	79	1	1	1	1	52	78	104	26	21	33	260	5	5	280	2	2	2	260
270	82	1	1	1	1	54	81	108	27	22	34	270	5	5	290	2	2	2	270
280	85	1	1	1	1	56	84	112	28	23	35	280	5	5	300	2	2	2	280
290	88	1	1	1	1	58	87	116	29	24	36	290	5	5	310	2	2	2	290
300	92	1	1	1	1	60	90	120	30	25	38	300	5	5	320	2	2	2	300
310	95	1	1	1	1	62	93	124	31	25	39	310	6	6	330	2	2	2	310
320	98	1	1	1	1	64	96	128	32	26	40	320	6	6	340	2	2	2	320
330	101	1	1	1	1	66	99	132	33	27	41	330	6	6	350	2	2	2	330
340	104	1	1	1	1	68	102	136	34	28	43	340	6	6	360	2	2	2	340
350	107	1	1	1	1	70	105	140	35	29	44	350	6	6	370	2	2	2	350
360	110	1	1	1	1	72	108	144	36	29	45	360	7	7	380	2	2	2	360
370	113	1	1	1	1	74	111	148	37	30	46	370	7	7	390	2	2	2	370
380	116	1	1	1	1	76	114	152	38	31	48	380	7	7	400	2	2	2	380
390	119	1	1	1	1	78	117	156	39	32	49	390	7	7	410	2	2	2	390
400	122	1	1	1	1	80	120	160	40	33	50	400	7	7	420	2	2	2	400
410	125	1	1	1	1	82	123	164	41	33	51	410	8	8	430	3	3	3	410
420	128	1	1	1	1	84	126	168	42	34	53	420	8	8	440	3	3	3	420
430	131	1	1	1	1	86	129	172	43	35	54	430	8	8	450	3	3	3	430
440	134	1	1	1	1	88	132	176	44	36	55	440	8	8	460	3	3	3	440
450	137	1	1	1	1	90	135	180	45	37	56	450	8	8	470	3	3	3	450
460	140	1	1	1	1	92	138	184	46	37	58	460	9	9	480	3	3	3	460
470	143	1	1	1	1	94	141	188	47	38	59	470	9	9	490	3	3	3	470
480	146	1	1	1	1	96	144	192	48	39	60	480	9	9	500	3	3	3	480
490	149	1	1	1	1	98	147	196	49	40	51	490	9	9	510	3	3	3	490
500	153	1	1	1	1	100	150	200	50	41	63	500	9	9	520	3	3	3	500

Toll-free: 1-800-99VALCO
Phone: (+1) 419-678-8731
Fax: (+1) 419-678-2200

POULT TURKEY - 2/3/4 PANS PER 10' TUBE - DOUBLE BOOT / CENTER FILL

Feed Line Length	Feed Line Length	Items to Select											Anti-Roost			Winched Feed Level			
		End House Control Pan *(Page 17-06 for Options)*	1/2 HP Motor & Gearbox *(Page 17-05 for options)*	Feed Hopper *(Page 17-04 for Options)*	Double Outlet Boot	Pan Feeder Assy (Page 17-07 for options)			10' Tube *(Page 17-08 for Options)*	1.75" Tube Clamp (Ribbed or Smooth)	1.75" Tube Hanger Ribbed - 450826 Smooth - 450123 / 450076	1.438" OD Auger (Feet)	Insulator Bracket & Clamp	Spring for Anti-Roost Wire	1/16" Anti-Roost Wire	600 lb. Winch Kit 460187			12.5 Gauge Solid Galvanized Wire
Feet	Meter				450800	2 Pan	3 Pan	4 Pan		451040		450450-	451042	450437	VG342	2 Pan	3 Pan	4 Pan	820025
160	49	2	2	1	1	32	48	64	16	14	20	160	2	2	180	2	2	2	160
170	52	2	2	1	1	34	51	68	17	15	21	170	2	2	190	2	2	2	170
180	55	2	2	1	1	36	54	72	18	16	23	180	2	2	200	2	2	2	180
190	58	2	2	1	1	38	57	76	19	17	24	190	2	2	210	2	2	2	190
200	61	2	2	1	1	40	60	80	20	18	25	200	2	2	220	2	2	2	200
210	64	2	2	1	1	42	63	84	21	19	26	210	4	4	230	2	2	2	210
220	67	2	2	1	1	44	66	88	22	20	28	220	4	4	240	2	2	2	220
230	70	2	2	1	1	46	69	92	23	21	29	230	4	4	250	2	2	2	230
240	73	2	2	1	1	48	72	96	24	22	30	240	4	4	260	2	2	2	240
250	76	2	2	1	1	50	75	100	25	23	31	250	4	4	270	2	2	2	250
260	79	2	2	1	1	52	78	104	26	24	33	260	4	4	280	2	2	2	260
270	82	2	2	1	1	54	81	108	27	25	34	270	4	4	290	2	2	2	270
280	85	2	2	1	1	56	84	112	28	26	35	280	4	4	300	2	2	2	280
290	88	2	2	1	1	58	87	116	29	27	36	290	4	4	310	2	2	2	290
300	92	2	2	1	1	60	90	120	30	28	38	300	4	4	320	2	2	2	300
310	95	2	2	1	1	62	93	124	31	29	39	310	6	6	330	2	2	2	310
320	98	2	2	1	1	64	96	128	32	30	40	320	6	6	340	2	2	2	320
330	101	2	2	1	1	66	99	132	33	31	41	330	6	6	350	2	2	2	330
340	104	2	2	1	1	68	102	136	34	32	43	340	6	6	360	2	2	2	340
350	107	2	2	1	1	70	105	140	35	33	44	350	6	6	370	2	2	2	350
360	110	2	2	1	1	72	108	144	36	34	45	360	6	6	380	2	2	2	360
370	113	2	2	1	1	74	111	148	37	35	46	370	6	6	390	2	2	2	370
380	116	2	2	1	1	76	114	152	38	36	48	380	6	6	400	2	2	2	380
390	119	2	2	1	1	78	117	156	39	37	49	390	6	6	410	2	2	2	390
400	122	2	2	1	1	80	120	160	40	38	50	400	6	6	420	2	2	2	400
410	125	2	2	1	1	82	123	164	41	39	51	410	8	8	430	4	4	4	410
420	128	2	2	1	1	84	126	168	42	40	53	420	8	8	440	4	4	4	420
430	131	2	2	1	1	86	129	172	43	41	54	430	8	8	450	4	4	4	430
440	134	2	2	1	1	88	132	176	44	42	55	440	8	8	460	4	4	4	440
450	137	2	2	1	1	90	135	180	45	43	56	450	8	8	470	4	4	4	450
460	140	2	2	1	1	92	138	184	46	44	58	460	8	8	480	4	4	4	460
470	143	2	2	1	1	94	141	188	47	45	59	470	8	8	490	4	4	4	470
480	146	2	2	1	1	96	144	192	48	46	60	480	8	8	500	4	4	4	480
490	149	2	2	1	1	98	147	196	49	47	61	490	8	8	510	4	4	4	490
500	153	2	2	1	1	100	150	200	50	48	63	500	8	8	520	4	4	4	500
510	156	2	2	1	1	102	153	204	51	49	64	510	10	10	530	4	4	4	510
520	159	2	2	1	1	104	156	208	52	50	65	520	10	10	540	4	4	4	520
530	162	2	2	1	1	106	159	212	53	51	66	530	10	10	550	4	4	4	530
540	165	2	2	1	1	108	162	216	54	52	68	540	10	10	560	4	4	4	540
550	168	2	2	1	1	110	165	220	55	53	69	550	10	10	570	4	4	4	550
560	171	2	2	1	1	112	168	224	56	54	70	560	10	10	580	4	4	4	560
570	174	2	2	1	1	114	171	228	57	55	74	570	10	10	590	4	4	4	570
580	177	2	2	1	1	116	174	232	58	56	73	580	10	10	600	4	4	4	580
590	180	2	2	1	1	118	177	236	59	57	74	590	10	10	610	4	4	4	590
600	183	2	2	1	1	120	180	240	60	58	75	600	10	10	620	4	4	4	600

SECTION 19
WINCHING

IN THIS CATALOG SECTION

PAGE NUMBER	CONTENTS
coming soon	Technical Information
19-02	Winches
19-03	Cable, Cable Accessories, and Tools
19-04	Solid Wire, Cord, Cord Accessories and Suspension Chain
19-05	Hardware for Suspending
19-06	Winching Fasteners
19-07 & 19-08	Pulleys
19-09	Anchor Brackets
19-10	Chain and Sprockets

Toll-free: 1-800-99VALCO
Phone: (+1) 419-678-8731
Fax: (+1) 419-678-2200

WINCHES

VB312

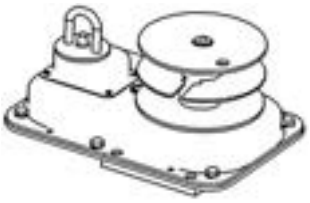

450378

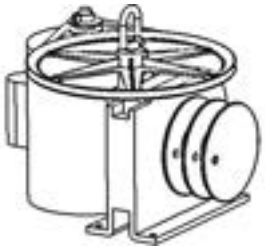

455400

OVERHEAD WINCHES

CATALOG NUMBER	ITEM DESCRIPTION	SHIP WEIGHT LBS.	SHIP WEIGHT KGS.	LIST PRICE
VB312	2000 lb. Manual Overhead Winch	10.5	4.8	
VB322	3000 lb. Manual Overhead Winch	39.0	17.7	
VB321	3500 lb. Manual Overhead Winch	36.0	16.3	
450378	5000 lb. Manual Overhead Winch	20.3	9.2	
455400	4800 lb. Electric Overhead Winch - Motor Not Included Order separately from catalog section 20. Motor Size 1st Cable Layer Last Layer 1 HP 4,800 lbs 2,228 lbs 3/4 HP 3,600 lbs 1,671 lbs 1/2 HP 2,400 lbs 1,114 lbs	52.0	23.6	
VB313	Winch Handle 5 FT	5.0	2.3	
820172	Winch Handle Universal (4-8 Ft.) Manual or Drill Assist	9.0	4.1	
820156	Universal Winch Mounting Hardware Kit	1.7	0.8	

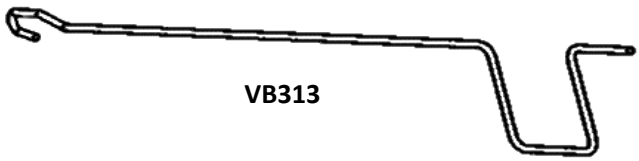

VB313

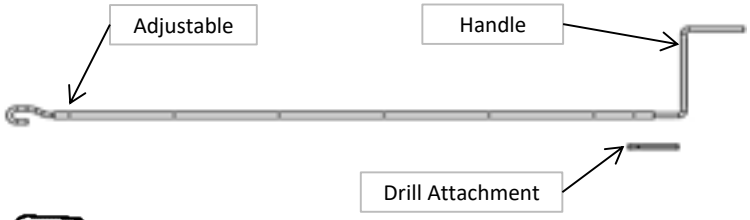

820172

VB315

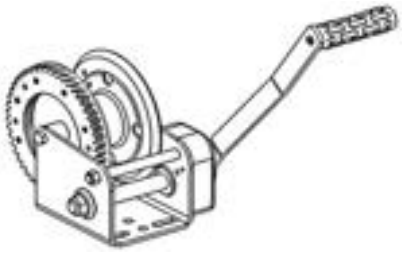

VB317

820173

HAND WINCHES

CATALOG NUMBER	ITEM DESCRIPTION	SHIP WEIGHT LBS.	SHIP WEIGHT KGS.	LIST PRICE
VB315	1100 lb. Ratchet Winch	6.0	2.7	
VB317	1500 lb. Brake Winch	8.0	3.6	
820173	Hand Winch Mounting Bracket	3.4	1.6	
820156	Universal Winch Mounting Hardware Kit	1.7	0.8	

Toll-free: 1-800-99VALCO
Phone: (+1) 419-678-8731
Fax: (+1) 419-678-2200

CABLE, CABLE ACCESSORIES, AND TOOLS

CABLE

CATALOG NUMBER	ITEM DESCRIPTION	SHIP WEIGHT LBS.	SHIP WEIGHT KGS.	LIST PRICE
VG342	1/16" Galvanized 7x19 Cable (Per Foot)	0.008	0.00	
VC343	1/8" Galvanized 7x7 Cable (Per Foot)	0.031	0.01	
VC350	1/8" Stainless Steel 7x7 Cable (Per Foot)	0.031	0.01	
VC351	3/16" Galvanized 7x7 Cable (Per Foot)	0.060	0.03	
VC352	3/16" Stainless Steel Cable (Per Foot)	0.005	0.00	
820122	1/4" Galvanized 7x19 Cable (Per Foot)	0.111	0.05	

VC353, 610101, VC354, VC358, VC355, 610161,

450559, 450386, VS344, VS343

VC345

VS342

CABLE ACCESSORIES

CATALOG NUMBER	ITEM DESCRIPTION	SHIP WEIGHT LBS.	SHIP WEIGHT KGS.	LIST PRICE
VC353	1/16" Galvanized Cable Clamp	0.018	0.008	
VC345	1/16" - 1/8" Screw Clamp (For Anti-Roost Cable)	0.015	0.007	
610101	3/32" Galvanized Cable Clamp	0.037	0.017	
VC354	1/8" Galvanized Cable Clamp	0.030	0.014	
VC358	1/8" Stainless Steel Cable Clamp	0.015	0.007	
VC355	3/16" Galvanized Cable Clamp	0.063	0.028	
610161	3/16" Stainless Steel Cable Clamp	0.000	0.000	
820123	1/4" Galvanized Cable Clamp	0.120	0.054	
PMSLEEVE	1/16" x 1/16" Cable Sleeve	0.001	0.000	
450559	1/16" x 1/16" Aluminum Cable Sleeve	0.001	0.000	
VS344	1/8" x 3/16" Cable Sleeve	0.012	0.005	
VS343	3/16" x 3/16" Cable Sleeve	0.016	0.007	
VS342	1/8" Cable Adjuster	0.058	0.026	

VS347

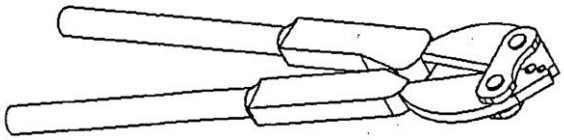

VS346

CABLE TOOLS

CATALOG NUMBER	ITEM DESCRIPTION	SHIP WEIGHT LBS.	SHIP WEIGHT KGS.	LIST PRICE
VS346	Swage Tool	5.6	2.527	
450291	8" Cable Cutter	0.0	0.0	
450291E	8" Cable Cutter (Economy)	0.7	0.3	
VS347	18" Cable Cutter	4.1	1.8	

Toll-free: 1-800-99VALCO
Phone: (+1) 419-678-8731
Fax: (+1) 419-678-2200

SOLID WIRE, CORD, CORD ACCESSORIES, AND SUSPENSION

SOLID WIRE

CATALOG NUMBER	ITEM DESCRIPTION	SHIP WEIGHT LBS.	SHIP WEIGHT KGS.	LIST PRICE
VEN9WIRE	Solid Galvanized Wire - 9 gauge - Per Foot	0.059	0.03	
820025	Solid Galvanized Wire - 12.5 gauge - Per Foot	0.026	0.01	

CORD

VD319	1/8" Polyester Cord (per foot)	0.004	0.00	
500668	3/16" Nylon Cord (per foot)	0.025	0.01	
VD320	1/4" Polyester Cord (per foot)	0.009	0.00	

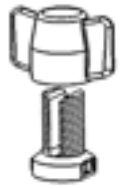

VCLAMP
VCLAMPL

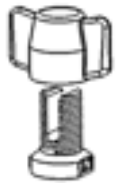

HCLAMP
HCLAMPL

VC360

VE345
VC361

VS341

VD321

CORD ACCESSORIES

CATALOG NUMBER	ITEM DESCRIPTION	SHIP WEIGHT LBS.	SHIP WEIGHT KGS.	LIST PRICE
VCLAMP	Plastic Cable Clamp (7/16"-14 Thread, 0.125" Slot Width) VB126 Clamp Bolt W/Long Slot (Yellow) + VB125 Nut (Yellow)	0.015	0.01	
HCLAMP	Plastic Cable Clamp (7/16"-14 Thread, 0.125" Slot Width) VB127 Clamp Bolt W/Short Slot (Blue) + VB125 Nut (Yellow)	0.012	0.005	
VCLAMPL	Plastic Cable Clamp (1/2"-13 Thread, 0.154" Slot Width) VB226 Clamp Bolt W/Long Slot (Blue) + VB225 Nut (Yellow)	0.013	0.006	
HCLAMPL	Plastic Cable Clamp (1/2"-13 Thread, 0.154" Slot Width) VB227 Clamp Bolt W/Short Slot (Blue) + VB225 Nut (Yellow)	0.017	0.008	
VC360	1/8" Open Stakon	0.006	0.002	
VE345	1/8" Regular Stakon	0.033	0.015	
VC361	3/16" Regular Stakon	0.010	0.005	
VS341	1/8" Cord Adjuster	0.014	0.006	
VD321	1/4" Cord Fid - Aluminum	0.004	0.002	

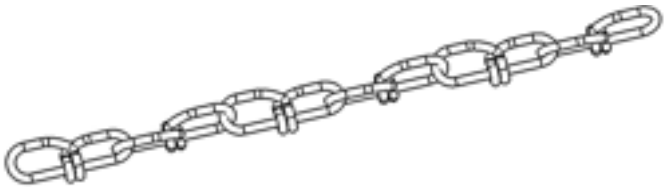

820099

SUSPENSION CHAIN

CATALOG NUMBER	ITEM DESCRIPTION	SHIP WEIGHT LBS.	SHIP WEIGHT KGS.	LIST PRICE
820099	2/0 DOUBLE LOOP CHAIN (per foot)	0.17	0.077	

Toll-free: 1-800-99VALCO
Phone: (+1) 419-678-8731
Fax: (+1) 419-678-2200

HARDWARE FOR SUSPENDING

VENEYEBOLT1/4-20

VENEYEBOLT

690444 - ZP
MH90925 - SS
MH90926 - SS

820235
(820231)

820233
820055
(820021)

PM4H24CLIP
PM4H58CLIP

SUSPENSION (FOR STEEL)

CATALOG NUMBER	ITEM DESCRIPTION	SHIP WEIGHT LBS.	SHIP WEIGHT KGS.	LIST PRICE
VENEYEBOLT1/4-20	1/4"-20 x 3" OPEN EYEBOLT	0.6	0.27	
VENEYEBOLT	3/8"-16 x 5" CLOSED EYEBOLT - ZP	0.0	0.00	
690444	1/4-20 x 2 1/2" Closed 1/2" I.D. Eye Bolt w/ Nut, Shank " - ZP	0.1	0.023	
MH90925	1/4-20 x 2 1/2" Closed 1/2" I.D. Eye Bolt With Nut - SS	0.0	0.000	
MH90926	3/8"-16 x 1 1/2" CLOSED EYEBOLT - SS	0.0	0.000	
820235	Steel Truss Winching Bracket (box of 50 with screws) - For winching waterline and standard feedline applications - Accepts pulleys VEN91101, VEN91102, and VEN91104	4.5	2.041	
820233	Steel Truss Suspension Bracket (box of 25 with screws) - For suspension and other winching applications - Accepts pulleys VEN91101, VEN91102, and VEN91104 - Accepts suspension chain 820099	4.7	2.150	
820055	Steel Truss Suspension Bracket (box of 50 with screws) - For suspension and other winching applications - Use with pulleys VEN91101, VEN91102, and VEN91104 - Accepts suspension chain 820099	10.1	4.559	
PM4H24CLIP	I-Beam Flange Clip (1/8" - 1/4" Thick)	0.0	0.009	
PM4H58CLIP	I-Beam Flange Clip (5/16" - 1/2" Thick)	0.0	0.018	

VEN91504C
713441
816005
690398

VP321

VEN91507B
VEN91507C

SUSPENSION (FOR WOOD)

CATALOG NUMBER	ITEM DESCRIPTION	SHIP WEIGHT LBS.	SHIP WEIGHT KGS.	LIST PRICE
VEN91504C	5/16" x 3-1/2" Lag Screw Hook - Zinc Plated	0.1	0.034	
713441	5/16" x 5" Lag Screw Hook - Zinc Plated	0.1	0.045	
816005	1/2" x 3-1/2" Lag Screw Hook - Zinc Plated	0.1	0.024	
690398	1/4" x 3-1/2" Lag Screw Hook - Stainless Steel	0.1	0.033	
VP321	Galvanized J Nail - For winching standard waterlines only - Accepts pulley VEN91104	0.0	0.008	

S HOOKS

CATALOG NUMBER	ITEM DESCRIPTION	SHIP WEIGHT LBS.	SHIP WEIGHT KGS.	LIST PRICE
VEN91507B	S Hook - .177" x 1.5"	0.0	0.009	
VEN91507C	S Hook - 1/4" x 2.25"	0.1	0.033	

Toll-free: 1-800-99VALCO
Phone: (+1) 419-678-8731
Fax: (+1) 419-678-2200

WINCHING FASTENERS

690262, 940706,
690067, VEN91505
690399

820234
(690285)

690168
690069

690147
690061

690150
690156

FASTENERS

CATALOG NUMBER	ITEM DESCRIPTION	SHIP WEIGHT LBS.	SHIP WEIGHT KGS.	LIST PRICE
690262	5/16" x 1-1/2" Lag Screw	0.0	0.01	
690399	5/16" x 1-1/2" Lag Screw - Stainless Steel	0.0	0.01	
940706	5/16" x 2-1/2" Lag Screw	0.0	0.000	
690067	3/8" x 2" Lag Screw	0.1	0.024	
VEN91505	3/8" x 3" Lag Screw	0.1	0.034	
690285	1/4"-14 x 1" TEK Screw	0.0	0.006	
820234	1/4"-14 x 1" TEK Screw (QTY 55)	1.0	0.454	
690168	5/16"-18 x 1" Hex Head Bolt	0.0	0.013	
690147	5/16"-18 x 2-1/2" Hex Head Bolt	0.1	0.026	
690150	5/16"-18 x 3-1/2" Hex Head Bolt	0.1	0.031	
690069	3/8"-16 x 1" Hex Head Bolt	0.0	0.019	
690061	3/8"-16 x 2-1/2" Hex Head Bolt	0.1	0.035	
690156	3/8"-16 x 3-1/2" Hex Head Bolt	0.1	0.046	
690019	1/4"-20 Nylock Nut	0.0	0.004	
690166	5/16"-18 Nylock Nut	0.1	0.051	
690214	3/8"-16 Nylock Nut	0.0	0.001	
690038	1/4" USS Flat Washer	0.0	0.003	
690035	5/16" USS Flat Washer	0.0	0.005	
690093	3/8" USS Flat Washer	0.0	0.007	
410844	3/8" Fender Washer (1-5/8 OD)	0.0	0.018	

Note: All fasteners listed are Zinc Plated Steel, other sizes, lengths, types and materials are available upon request.

690019
690166
690214

690038
690035

410844

Toll-free: 1-800-99VALCO
Phone: (+1) 419-678-8731
Fax: (+1) 419-678-2200

PULLEYS

VEN91104
690400

VEN91101

VEN91102

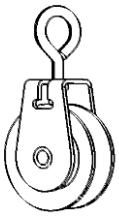

ZR1801

VEN911

VEN91004

PLASTIC PULLEYS

CATALOG NUMBER	ITEM DESCRIPTION	SHIP WEIGHT LBS.	SHIP WEIGHT KGS.	LIST PRICE
VEN91104	7/8" Nylon Swivel Pulley	0.0	0.02	
690400	7/8" Nylon Swivel Pulley - Stainless Steel	0.0	0.02	
VEN91101	1-7/8" Nylon Swivel Pulley	0.1	0.05	
VEN91102	1-7/8" Nylon Swivel Pulley	0.1	0.06	
ZR1801	1-7/8" Nylon Swivel Pulley - Stainless Steel	0.2	0.07	
VEN91103	1-7/8" Nylon Split Bracket Pulley	0.1	0.06	
690468	2-1/2" Nylon Pulley - 300 Lbs Max Load	0.3	0.13	
VEN91004	3-1/2" Nylon Pulley	0.5	0.21	

VEN91201

VEN91202

VEN91203

STEEL PULLEYS

CATALOG NUMBER	ITEM DESCRIPTION	SHIP WEIGHT LBS.	SHIP WEIGHT KGS.	LIST PRICE
VEN91201	1-1/2" Steel Split Bracket Pulley	0.2	0.10	
VEN91202	2-1/2" Steel Split Bracket Pulley	0.5	0.24	
VEN91203	2-1/2" Steel Split Bracket Pulley With Bearing	0.6	0.26	

Toll-free: 1-800-99VALCO
Phone: (+1) 419-678-8731
Fax: (+1) 419-678-2200

PULLEYS

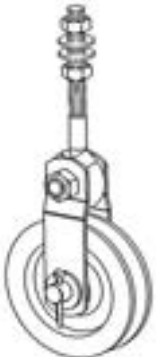

VEN91003

VEN91003A

VEN91001

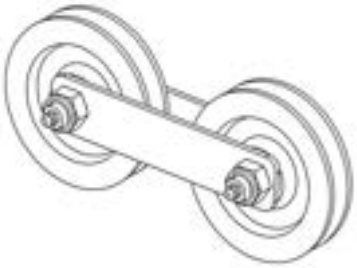

VEN91111

CAST IRON PULLEYS

CATALOG NUMBER	ITEM DESCRIPTION	SHIP WEIGHT LBS.	SHIP WEIGHT KGS.	LIST PRICE
VEN91003	3-1/2" Cast Iron Pulley With Bronze Bushing - With Eyebolt	1.5	0.69	
VEN91003A	3-1/2" Cast Iron Pulley With Bronze Bushing - No Eyebolt	1.0	0.46	
VEN91001	3-1/2" Cast Iron Pulley With Needle Bearing - No Bolt	1.4	0.65	
VEN91111	Double Cast Pulley With Bronze Bushings	2.9	1.32	

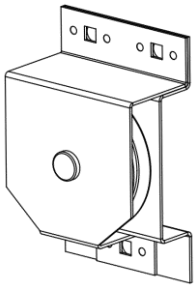

820167

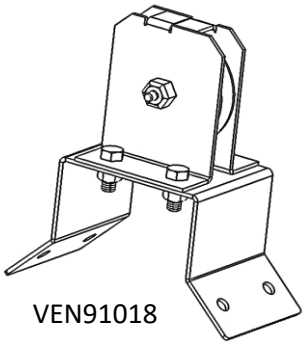

VEN91018

VEN91002

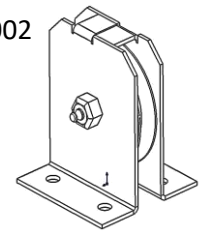

VEN91015

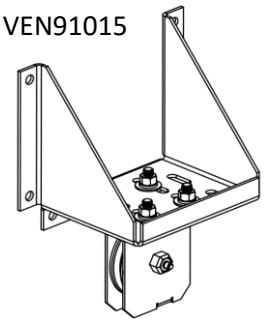

MOUNTED PULLEYS

CATALOG NUMBER	ITEM DESCRIPTION	SHIP WEIGHT LBS.	SHIP WEIGHT KGS.	LIST PRICE
820167	3-1/2" Fiberglass Reinforced Nylon Horizontal	1.6	0.73	
VEN91002	3-1/2" Cast Iron With Needle Bearing Bushing	2.7	1.2	
VEN91005	4-1/2" Cast Iron Pulley with bracket	2.3	1.0	
VEN91018	Corner Pulley Kit	4.0	1.8	
VEN91015	Adjustable Wall Pulley Kit	6.4	2.9	

CABLE AND PULLEY ANCHOR BRACKETS

820162

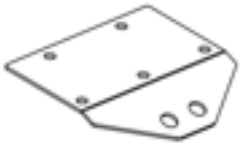

820163

Anchor Brackets

CATALOG NUMBER	ITEM DESCRIPTION	SHIP WEIGHT LBS.	SHIP WEIGHT KGS.	LIST PRICE
820162	Single Pulley/Cable Anchor Bracket Requires (3) 3/8" Fasteners Accepts Pulleys VEN91004, VEN91003A, and VEN91001	0.9	0.39	
820163	Double Pulley Anchor Bracket Requires (5) 3/8" Fasteners Accepts Pulleys VEN91004, VEN91003A, and VEN91001	1.8	0.81	

Note: Pulleys (19-07 thru 19-08), Hardware (19-06), Cable (19-03), and Cable Accessories (19-03) Sold Separately

820162 BRACKET TYPICAL APPLICATIONS

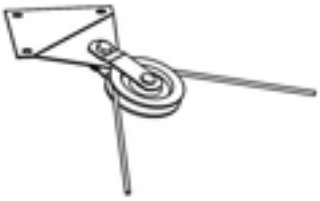

Pulley Anchor - Ceiling or Wall

Cable Anchor Plate

820163 BRACKET TYPICAL APPLICATIONS

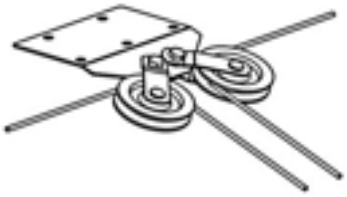

Pulley Anchor - Ceiling or Wall

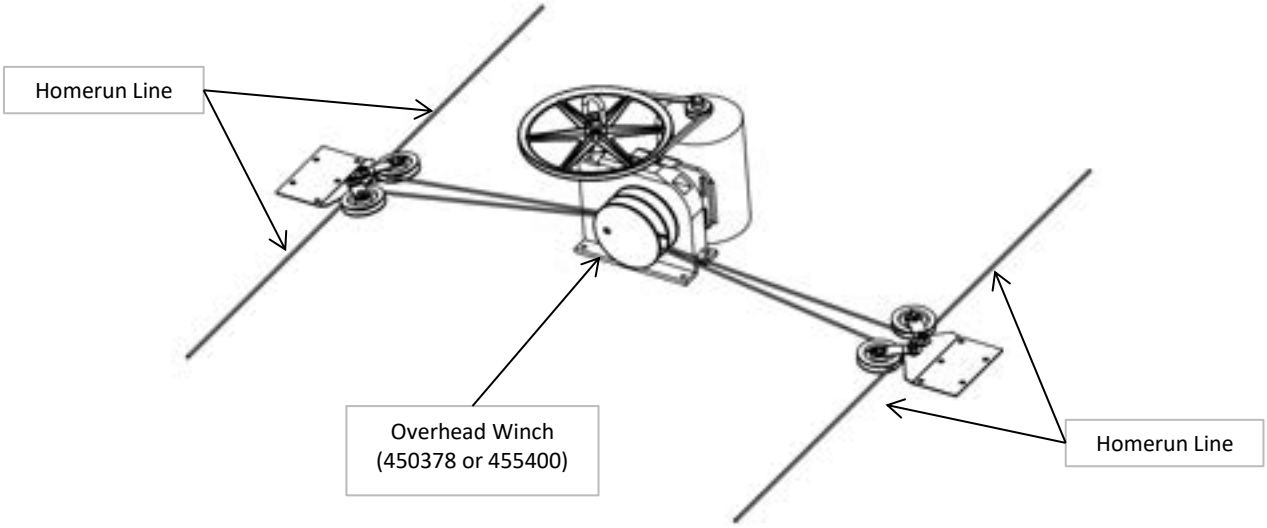

IMPORTANT: APPLIED LOADS MUST BE CONSIDERED WHEN CHOOSING AND INSTALLING WINCHING COMPONENTS.

Toll-free: 1-800-99VALCO
Phone: (+1) 419-678-8731
Fax: (+1) 419-678-2200

CHAIN AND SPROCKETS

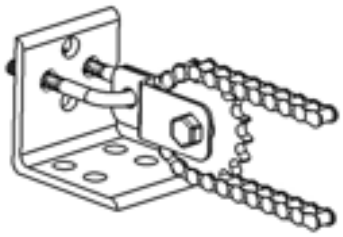

820026

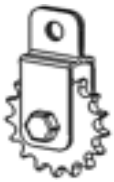

820027

820028

Chain and Sprockets

CATALOG NUMBER	ITEM DESCRIPTION	SHIP WEIGHT LBS.	SHIP WEIGHT KGS.	LIST PRICE
820026	Sprocket and Chain Kit	0.8	0.4	
820027	Split Bracket Sprocket (For #40 Chain)	0.0	0.0	
820028	#40 Chain, 30" Length	0.0	0.0	

780017

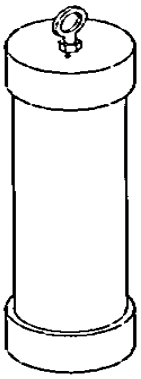

750014

Springs & Counterweights

CATALOG NUMBER	ITEM DESCRIPTION	SHIP WEIGHT LBS.	SHIP WEIGHT KGS.	LIST PRICE
780017	18" 17-7 PH Stainless Steel Spring	1.7	0.8	
750014	Weight Assembly	10.2	4.6	

SECTION 20
MOTORS & ELECTRICAL

IN THIS CATALOG SECTION

PAGE NUMBER	CONTENTS
20-02	Farm Duty Motors
20-03	Direct Drive Motors

FARM DUTY MOTORS

60HZ - 1 PHASE

CATALOG NUMBER	HORSE-POWER	HZ	1 OR 3 PHASE	MOTOR VOLTAGE	MOTOR RPM	ENCLO-SURE	NEMA FRAME	SHAFT SIZE	THERMO PROTECT	SHIP WEIGHT	LIST PRICE
920401	.50	60	1	115/230	1725	TEFC	56	5/8"	Manual	24.0	
920402	.75	60	1	115/208-230	1725	TEFC	56	5/8"	Manual	27.0	
920403	1.0	60	1	115/230	1725	TEFC	56	5/8"	Manual	34.0	
920404	1.5	60	1	115/208-230	1725	TEFC	56H	5/8"	Manual	44.0	
920405	2	60	1	115/230	1725	TEFC	56C	7/8"	Manual	49.3	
920406	3.0	60	1	230	1740	TEFC	184T	1-1/8"	Manual	75.0	
410129	3.0	60	1	230	3450	Drip Proof	56Y	5/8"	Manual	39.6	
920407	5.0	60	1	230	1740	TEFC	184T	1-1/8"	Manual	87.0	

60HZ - 3 PHASE

CATALOG NUMBER	HORSE-POWER	HZ	1 OR 3 PHASE	MOTOR VOLTAGE	MOTOR RPM	ENCLO-SURE	NEMA FRAME	SHAFT SIZE	THERMO PROTECT	SHIP WEIGHT	LIST PRICE
920441	.50	60	3	208-230/460	1725	TEFC	56	5/8"	Manual	21.0	
920442	.75	60	3	208-230/460	1725	TEFC	56	5/8"	Manual	24.0	
920443	1.0	60	3	230/460	1745	TEFC	56	5/8"	Manual	26.0	
920444	1.5	60	3	230/460	1725	TEFC	56H	5/8"	Manual	30.0	
920446	3.0	60	3	208-230/460	1740	TEFC	182T	1-1/8"	None	57.0	
920447	5.0	60	3	208-230/460	1755	TEFC	184T	1-1/8"	None	74.0	

50HZ - 1 PHASE

CATALOG NUMBER	HORSE-POWER	HZ	1 OR 3 PHASE	MOTOR VOLTAGE	MOTOR RPM	ENCLO-SURE	NEMA FRAME	SHAFT SIZE	THERMO PROTECT	SHIP WEIGHT	LIST PRICE
920551	.50	50	1	110/220	1425	TEFC	56	5/8"	None	21.0	
920552	.75	50	1	110/220	1425	TEFC	56	5/8"	None	23.0	
920553	1.0	50	1	110/220	1450	TEFC	56H	5/8"	None	25.0	
920554	1.5	50	1	110/220	1500	IP54	56H	5/8"	Manual	30.0	
920555	2.0	50	1	220	1500	TEFC	182T	1-1/8"	Manual	85.0	
920556	3.0	50	1	110/220	1450	TEFC	56H	1-1/8"	None	32.1	
410675	3.0	50	1	220	3000	IP22	56H	5/8"	None	47.0	
920557	5.0	50	1	220	1500	TEFC	184T	1-1/8"	None	105.0	

50HZ - 3 PHASE

CATALOG NUMBER	HORSE-POWER	HZ	1 OR 3 PHASE	MOTOR VOLTAGE	MOTOR RPM	ENCLO-SURE	NEMA FRAME	SHAFT SIZE	THERMO PROTECT	SHIP WEIGHT	LIST PRICE
920561	.50	50	3	208-220	1725	TEFC	56	5/8"	None	27.0	
920562	.75	50	3	208-220	1725	TEFC	56	5/8"	None	24.0	
920563	1.0	50	3	208-220	1725	TEFC	56H	5/8"	None	30.0	
920564	1.5	50	3	208-220	1725	TEFC	56H	5/8"	None	34.0	
920565	2.0	50	3	208-220	1725	TEFC	56H	5/8"	None	30.0	
920566	3.0	50	3	190/380	1458	TEFC	184T	1-1/8"	None	54.0	
920567	4.7	50	3	190/380	1450	TEFC	184T	1-1/8"	None	63.0	

DIRECT DRIVE MOTORS

60HZ - 1 PHASE

CATALOG NUMBER	HORSE-POWER	HZ	1 OR 3 PHASE	MOTOR VOLTAGE	MOTOR RPM	ENCLO-SURE	NEMA FRAME	SHAFT SIZE	THERMO PROTECT	SHIP WEIGHT	LIST PRICE
735390	.50	60*	1	115/230	1725	TEFC	56YZ	.50"	Manual	29.5	
735391	.75	60*	1	115/208-230	1725	TEFC	56YZ	.50"	Manual	32.4	
735392	1.0	60*	1	115/208-230	1725	TEFC	56Y	.625"	Manual	36.0	
735486	1.5	60	1	115/208-230	1725	TEFC	56C	.625"	Manual	43.4	

60HZ - 3 PHASE

CATALOG NUMBER	HORSE-POWER	HZ	1 OR 3 PHASE	MOTOR VOLTAGE	MOTOR RPM	ENCLO-SURE	NEMA FRAME	SHAFT SIZE	THERMO PROTECT	SHIP WEIGHT	LIST PRICE
735460	0.50	60*	3	208-230/460	1725	TEFC	56Y	0.500"	Manual	25.0	
735461	.75	60*	3	208-230/460	1725	TEFC	56Y	0.500"	Manual	32.0	
735462	1.0	60*	3	208-230/460	1725	TEFC	56Y	0.625"	Manual	35.9	
735463	1.5	60*	3	230/460	1755	TEFC	56N	0.625"	Manual	39.0	

50HZ - 1 PHASE

CATALOG NUMBER	HORSE-POWER	HZ	1 OR 3 PHASE	MOTOR VOLTAGE	MOTOR RPM	ENCLO-SURE	NEMA FRAME	SHAFT SIZE	THERMO PROTECT	SHIP WEIGHT	LIST PRICE
735390	.33	50*	1	115/230	1425	TENV	56YZ	.50"	Manual	29.5	
735391	.75	50*	1	115/230	1425	TEFC	56YZ	.50"	Manual	32.4	
735464	1.0	50*	1	110/220	1425	TEFC	56N	.625"	Manual	40.0	
735465	1.5	50*	1	110/220	1425	TEFC	56N	.625"	Manual	45.0	

50HZ - 3 PHASE

CATALOG NUMBER	HORSE-POWER	HZ	1 OR 3 PHASE	MOTOR VOLTAGE	MOTOR RPM	ENCLO-SURE	NEMA FRAME	SHAFT SIZE	THERMO PROTECT	SHIP WEIGHT	LIST PRICE
735460	0.50	50*	3	190/380V	1425	TEFC	56Y	0.500"	Manual	25.0	
735461	.75	50*	3	190/380V	1425	TEFC	56Y	0.500"	Manual	32.0	
735462	1.0	50*	3	190/380V	1425	TEFC	56Y	0.625"	Manual	35.9	
735463	1.5	50*	3	190/380V	1425	TEFC	56N	0.625"	Manual	39.0	

* Operable at 60 HZ or 50 HZ.

This page left intentionally blank

SECTION 22
FLOOR WATERING PRICING

IN THIS CATALOG SECTION

PAGE NUMBER	CONTENTS
22-02	How to Order Floor Watering
22-03	Regulators
22-04	Intakes / Hose / End Assemblies / Flush Kits
22-05	Standpipe - Flex and Rigid
22-06	Lead-In Kits / Inline Shut Offs / Air Release
22-07	Filters / Water Meters / Medicator / Cleaners & Solutions / Line Shockers
22-08	Floor Watering Pipe Components - Pipe Assembly & Support Types
22-09	Floor Watering - Hanger Type / Support Drop Kits / Winching Cable
22-10	Floor Watering - Drinkers & Pipe Kits
22-11	Floor Watering - Accessories
22-12 thru 22-18	Drinker Descriptions, Identification Chart & Flow Rates
22-18	Floor Watering Option - Competitor Changeover & Replacement Items
22-19	Turkey Bell Drinkers
22-20 thru 22-21	Big Tom Turkey Pipe Kit Ordering
22-22	Floor Watering Options -Turkey Drinker / Mini Drinker / TruSeal / Replacement Standpipe / Misc.
22-23	Floor Watering Options - Conduit & Aluminum / PVC Pipe & Valves
22-24	Floor Watering Options - PVC Fittings
22-25	VR202 Regulator Repairs - VRP09 Intake
22-26	VR202 Regulator Repairs - RFV160 Intake
22-27	Regulator Installation With RFV160K 3-Position Intake - Automatic Flush
22-28	3-Position Flushing Intake Repairs
22-29	VR203 Regulator Repairs
22-30	VR204 Regulator Repairs
22-31	VR205 Regulator Repairs / VR209 Regulator Repair Parts
22-32 thru 22-33	Numerical Listing of Regulator Repairs
22-34	Filter Kit Repairs & Turkey Drinker repair parts

Toll-free: 1-800-99VALCO
Phone: (+1) 419-678-8731
Fax: (+1) 419-678-2200

FLOOR WATERING

HOW TO ORDER

CONTENTS

1. Determine type of bird, dimensions of house, and number of birds to be watered.
2. Using guidelines shown below, determine total number of watering lines and Drinkers needed to accommodate the number of birds in the house.
3. Select & order one floor regulator per line. Line length should not exceed 400' (122 m) If there is slope in the house, call for assistance in determining regulator needs.
4. Order correct number of watering pipe components after determining drinker spacing, type of support (conduit or aluminum extrusion), and type of Drinker needed.
5. Select and order one end assembly or automatic floor flush kit per line.
6. For each line, select and order other accessories as needed: winch & handle, Drinker drinker clip for breeders, trough mini drinker, etc.
7. For each house, select and order other accessories as needed: filter kit/backflush hookup, medicator & hookup kit, water meter, lead-in kit, standpipe bottle brush, shocking unit, etc.

BROILER GUIDELINES

- Brood area - recommended 30 birds per drinker up to 10 days old.
- Growout area - recommended 12-15 birds per drinker.
- Place water lines on both side of feed.
- Place water lines 2-3 ft. (61-91cm) from feed.
- Maximum line length is 400 ft. (122m).

BREEDER GUIDELINES

- All birds (male & female) - recommended 8-12 birds per drinker.
- Drinker spacing should never be less than 10" (24.5 cm)
- Place water lines 2-3' (61-91cm) from feed.
- Locking clip required on all Drinkers.
- Maximum line length is 400 ft. (122m).

TURKEY GUIDELINES

- For Big Tom Cup Drinker System:
  - 30 - 40 birds per drinker (0 - 6 weeks)
  - 25 - 30 birds per drinker (Hen Finish)
  - 20 - 25 birds per drinker Tom Finish)
  - 20 Max Birds per drinker (Tom Heavy Finish)
- Recommended density is 85 turkeys per TurkeyMax bell drinker, after six weeks to growout.
- Place water lines 2-3' (61-91cm) from feed.

DUCK GUIDELINES

- Recommended Drinkers for Ducks:

  Standard Flow - VR150, VR150PFA
  High Flow - VR150H, VR150HPFA
  Extra High Flow - VR150HX, VR150HXPFA
  Very High Flow - VR150HXDPFA

  High Flow Drinkers Should Not be used where wet floors are a concern.

  Quantity

  Meat - 10-12 Ducks per Drinker
  Rearing - 10 Ducks per Drinker
  Lay - 5 Ducks per Drinker

Toll-free: 1-800-99VALCO
Phone: (+1) 419-678-8731
Fax: (+1) 419-678-2200

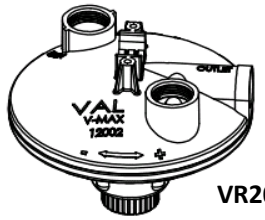

VR202

REGULATORS

V-MAX Regulator Ordering Instructions

1. **Order the regulator.**
2. **Order the desired intake.**
3. **Order the desired standpipe.**
4. **Order the intake hose.**

(3/4" for flush intake, 3/8" for old style intake.)

VR209P

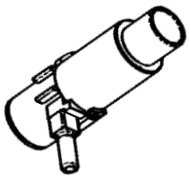

820515

V-MAX VR202 FLOOR REGULATOR KIT (requires 1 standpipe)

CATALOG # Aluminum	CATALOG # Conduit	ITEM DESCRIPTION	Parts / Box	SHIP WEIGHT LBS.	SHIP WEIGHT KG.	LIST PRICE EACH
VR202KA	VR202KC	Regulator Kit with Anti-Tilt Bracket	12	1.79	0.81	
VR202KAPC	VR202KCPC	Regulator Kit without Anti-Tilt Bracket	12	1.80	0.82	
1.25"/33mm Perch Pipe						
VR202KL		Regulator Kit Anti-Tilt Bracket	12	2.32	1.05	

V-MAX VR202 QUICK KITS (Commonly ordered components packaged together) - *(No Hose included)*

CATALOG # Aluminum	CATALOG # Conduit	ITEM DESCRIPTION	Parts / Box	SHIP WEIGHT LBS.	SHIP WEIGHT KG.	LIST PRICE EACH
820481	820489	Regulator Kit - VR202K, RFV160K, VSP30FS		4.47	2.03	
820482	820490	Regulator Kit - VR202K, VRP09K, VSP30FS		3.98	1.81	
820483	820491	Regulator Kit - VR202K, RFV160LK, VSP30FS		4.46	2.02	
820484	820492	Regulator Kit - VR202K, VRP09LK, VSP30FS		3.97	1.80	
820485	820493	Regulator Kit - VR202K, RFV160K, VSP24FS		4.68	2.12	
820486	820494	Regulator Kit - VR202K, VRP09K, VSP24FS		3.89	1.76	
820487	820495	Regulator Kit - VR202K, RFV160LK, VSP24FS		4.38	1.99	
820488	820496	Regulator Kit - VR202K, VRP09LK, VSP24FS		3.89	1.76	

V-MAX VR203 MID-LINE FLOOR REGULATOR (requires 1 standpipe)

VR203KA	VR203KC	Mid Line Regulator Kit with Anti-Tilt Bracket	12	1.80	0.82	
VR203KAPC	VR203KCPC	Mid Line Regulator Kit without Anti-Tilt Bracket	12	1.80	0.82	

V-MAX VR204 SLOPE REGULATOR (req. 2 standpipe - 1 must be 'K')

VR204KA	VR204KC	Slope Regulator Kit with Anti-Tilt Bracket	12	1.87	0.85	
VR204KAPC	VR204KCPC	Slope Regulator Kit without Anti-Tilt Bracket	12	1.80	0.82	
VR204KL		Slope Regulator Kit for 1.25" / 33mm Perch Pipe	12	2.46	1.12	

VR209 SLOPE REGULATOR

820730	VR209-24	Slope Regulator Kit With 18" Standpipe & Coupler		0.66	0.30	
820732	VR209-24	Slope Regulator Kit With 24" Standpipe & Coupler		0.66	0.30	
820734	VR209-30	Slope Regulator Kit With 30" Standpipe & Coupler		0.73	0.33	
820752		Slope Regulator Kit, 18" Flex Pipe, 1.25" / 33mm Perch Pipe		0.65	0.29	
820753		Slope Regulator Kit, 18" Flex Pipe Flat Cap, 1.25" / 33mm Perch		0.60	0.27	
820754		Slope Regulator Kit, 24" Flex Pipe, 1.25" / 33mm Perch Pipe		0.69	0.31	
820755		Slope Regulator Kit, 24" Flex Pipe Flat Cap, 1.25" / 33mm Perch		0.65	0.29	
820756		Slope Regulator Kit, 30" Flex Pipe, 1.25" / 33mm Perch Pipe		0.77	0.35	
820757		Slope Regulator Kit, 30" Flex Pipe Flat Cap, 1.25" / 33mm Perch		0.72	0.33	
VR209P		Slope Regulator Only - Automatic Flush Thru	180	0.18	0.08	
VR209S		Air Release with "L" Stem	180	0.11	0.05	
820513		Air Release with Side Exit Stem		0.10	0.05	
820515		Slope Regulator Only - with Side Exit Stem		0.17	0.08	
820516		Slope Regulator Only - with Side Stem Plug		0.17	0.08	
VRP90		Slope Regulator - Left Kit for VR209		0.11	0.05	

All VR209 slope regulators include spring and S-bracket or pipe clip. Fold-over standpipe is not available for VR209 slope regulators.

VR205 HIGH PRESSURE REGULATOR

VR205	High Pressure Regulator Kit - No Gauges	12	2.16	0.98	
VR205-1	High Pressure Regulator Kit - 1 Gauge	10	2.65	1.20	
VR205-2	High Pressure Regulator Kit - 2 Oil Filled Pressure Gauges	10	3.14	1.42	

Maximum Incoming Pressure: 100 PSI *Pressure Range: 25 PSI Minimum*

INDIVIDUAL REGULATOR

12002	V-MAX Regulator only for VR202K	12	1.48	0.67	
12003	V-MAX Regulator only for VR203K	12	1.60	0.73	
12004	V-MAX Regulator only for VR204K	12	1.60	0.73	

Toll-free: 1-800-99VALCO
Phone: (+1) 419-678-8731
Fax: (+1) 419-678-2200

INTAKE KITS

STANDARD

Incoming Pressure
15-40 PSI

Pressure Range
0-1.3 PSI or 0-36" Water Column

Note: Head of house regulator

LOW PRESSURE

Incoming Pressure
4-15 PSI

Pressure Range
0-1.3 PSI or 0-36" Water Column

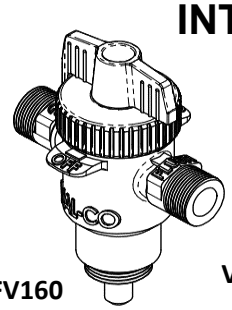

RFV160

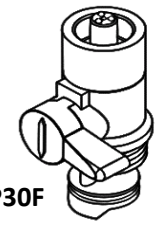

VRP30F

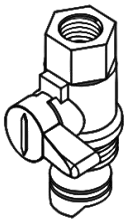

VRP09

INTAKE KITS

CATALOG #	ITEM DESCRIPTION	Box Qty	SHIP WEIGHT LBS.	SHIP WEIGHT KG.	LIST PRICE EACH
RFV160K	Inlet Kit, Flushing, Shut Off (incl. (2) PMTT6, VRP66, VRP67S, (2) PMHC3-4)	40	0.62	0.28	
RFV160LK	Inlet Kit, Flushing, Shut off, Low pressure (incl. same parts as RFV160K)	40	0.66	0.30	
VRP09K	Inlet Kit, Shut off (incl, (2) VRP45 & (2) VRP375)	200	0.16	0.07	
VRP09LK	Inlet Kit, Shut off, low pressure (incl, (2) VRP45 & (2) VRP375)	200	0.16	0.07	

INDIVIDUAL INTAKE

RFV160	Regulator Flushing Intake only	50	0.43	0.20	
RFV160L	Regulator Flushing Intake only - Low Pressure	50	0.41	0.18	
VRP09	Shutoff Intake only	50	0.13	0.06	
VRP09L	Shutoff Intake only - Low Pressure	250	0.09	0.04	
VRP30F	Shutoff Intake with Flex Standpipe Connection		0.12	0.05	

HOSE

VRP79-Q300	PVC Yellow Regulator drop HOSE, ¾" ID (**Unit of measure: 300 Foot Roll**) For use with new style flush intake. (RFV160)	66.20	30.03	
VRP79	PVC Yellow Regulator drop HOSE, ¾" ID (**Unit of measure: Per foot**) For use with new style flush intake. (RFV160)	0.20	0.09	
VRP48-Q500	PVC Yellow Regulator Drop Hose, 3/8" (**Unit of measure: 500 Foot Roll**) For use with old style intake. (VRP09)	39.60	17.96	
VRP48	PVC Yellow Regulator Drop Hose, 3/8" (**Unit of measure: per foot**) For use with old style intake. (VRP09)	0.08	0.04	

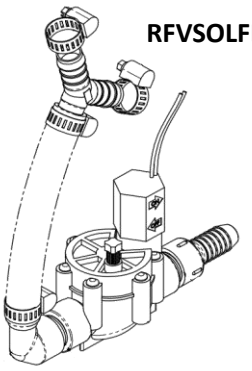

RFVSOLFLUSHKI

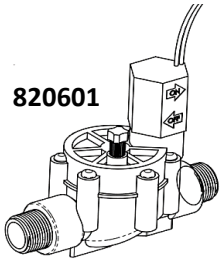

820601

820580
(Regulator, Anti-Tilt Bracket and Intake not included in Kit)

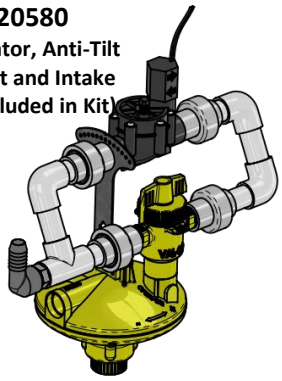

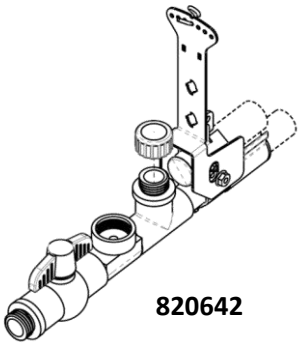

820642

END ASSEMBLIES (requires 1 standpipe)

CATALOG #	ITEM DESCRIPTION	Box Qty	SHIP WEIGHT LBS.	SHIP WEIGHT KG.	LIST PRICE EACH
820642	End Assembly Kit, Manual US GHA	30	1.43	0.65	
820642PC	End Assembly Kit manual US GHA - without Anti-Tilt Bracket	30	1.00	0.45	
820643	End Assembly Kit manual SI GHA	30	1.42	0.64	
820643PC	End Assembly Kit manual SI GHA - without Anti-Tilt Bracket	30	0.85	0.39	
820670	End Assembly Kit manual US GHA Full Rib for 1.25"/33mm Perch Pipe	30	1.13	0.51	

FLOOR FLUSH KIT

RFVSOLFLUSHKIT	24vdc Solenoid flush kit with Hose	1.32	0.60	
820580	24vdc Solenoid flush kit with PVC (Regulator, Bracket and Intake not included)	1.90	0.86	
820601	24vdc Solenoid with 3/4" MNPT	0.78	0.35	

VF 200 and VF202 Flush Kits include clear hose, spring, holding bracket, 3/4" ball valve and all plumbing fittings needed; drain pipe not included.

Toll-free: 1-800-99VALCO
Phone: (+1) 419-678-8731
Fax: (+1) 419-678-2200

FLEX STANDPIPE

CATALOG #	ITEM DESCRIPTION	Box Qty	SHIP WEIGHT LBS.	SHIP WEIGHT KG.	LIST PRICE EACH
Foldover Standpipes					
VSP18FO	FLEX SP ASSY, 18", FOLD OVER	50	0.44	0.20	
VSP24FO	FLEX SP ASSY, 24", FOLD OVER	50	0.50	0.23	
VSP30FO	FLEX SP ASSY, 30", FOLD OVER	50	0.47	0.21	
Shutoff Standpipes					
VSP18FS	FLEX SP ASSY, 18", SHUTOFF	12	0.36	0.16	
VSP24FS	FLEX SP ASSY, 24", SHUTOFF	50	0.49	0.22	
VSP30FS	FLEX SP ASSY, 30", SHUTOFF	50	0.56	0.25	
1/2" NPT Standpipes					
VSP18FK	FLEX SP ASSY, 18", INTAKE	50	0.35	0.16	
VSP24FK	FLEX SP ASSY, 24", INTAKE	50	0.44	0.20	
VSP30FK	FLEX SP ASSY, 30", INTAKE	50	0.46	0.21	
Shutoff with Barb and Hose Clamp					
VSP24FF	FLEX SP ASSY, 24", SHUTOFF with Barb and Hose Clamp	50	0.53	0.24	
VSP30FF	FLEX SP ASSY, 30", SHUTOFF with Barb and Hose Clamp	50	0.53	0.24	

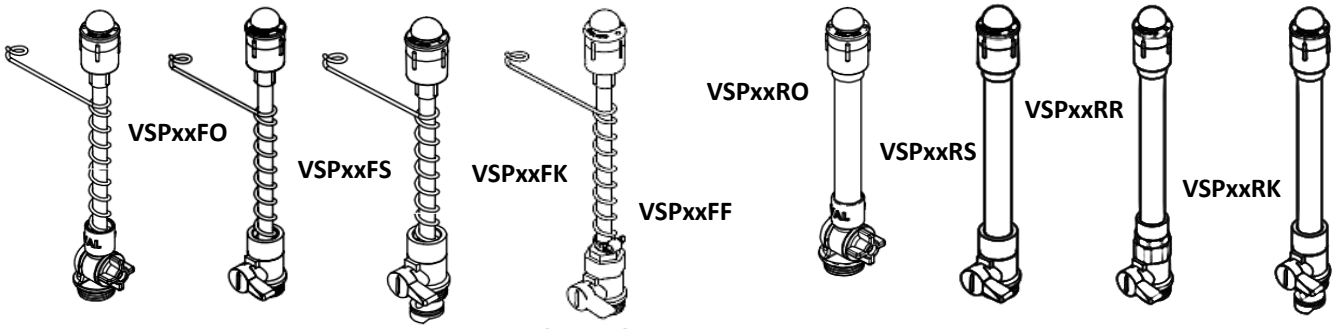

RIGID STANDPIPE

CATALOG #	ITEM DESCRIPTION	Box Qty	SHIP WEIGHT LBS.	SHIP WEIGHT KG.	LIST PRICE EACH
Foldover Standpipes					
VSP12RO	RIGID SP ASSY, 12", FOLD OVER	50	0.22	0.10	
VSP18RO	RIGID SP ASSY, 18", FOLD OVER	50	0.33	0.15	
VSP24RO	RIGID SP ASSY, 24", FOLD OVER	50	0.37	0.17	
VSP30RO	RIGID SP ASSY, 30", FOLD OVER	40	0.40	0.18	
VSP36RO	RIGID SP ASSY, 36", FOLD OVER	40	0.38	0.17	
Shutoff Standpipes					
VSP12RS	RIGID SP ASSY, 12", SHUTOFF	50	0.30	0.14	
VSP18RS	RIGID SP ASSY, 18", SHUTOFF	50	0.34	0.15	
VSP24RS	RIGID SP ASSY, 24", SHUTOFF	50	0.40	0.18	
VSP30RS	RIGID SP ASSY, 30", SHUTOFF	40	0.44	0.20	
VSP36RS	RIGID SP ASSY, 36", SHUTOFF	40	0.49	0.22	
1/2" NPT Standpipes					
VSP12RR	RIGID SP ASSY, 12", 1/2" NPT	50	0.24	0.11	
VSP18RR	RIGID SP ASSY, 18", 1/2" NPT	50	0.29	0.13	
VSP24RR	RIGID SP ASSY, 24", 1/2" NPT	50	0.41	0.19	
VSP30RR	RIGID SP ASSY, 30", 1/2" NPT	40	0.39	0.18	
VSP36RR	RIGID SP ASSY, 36", 1/2" NPT	40	0.44	0.20	
Intake Standpipes					
VSP12RK	RIGID SP ASSY, 12", INTAKE	50	0.21	0.10	
VSP18RK	RIGID SP ASSY, 18", INTAKE	50	0.25	0.11	
VSP24RK	RIGID SP ASSY, 24", INTAKE	50	0.29	0.13	
VSP30RK	RIGID SP ASSY, 30", INTAKE	40	0.33	0.15	
VSP36RK	RIGID SP ASSY, 36", INTAKE	40	0.37	0.17	

Brushes For Standpipes

VB151	Bottle Brush for Rigid Standpipe	0.11	0.05	
VB151F	Bottle Brush for Flex Standpipe	0.11	0.05	

FLOOR WATERING OPTIONS

LEAD-IN KITS

CATALOG #	ITEM DESCRIPTION	SHIP WEIGHT LBS.	SHIP WEIGHT KG.	LIST PRICE EACH
VL902	Lead-In Kit for 2 Watering Lines *[VP001(10), VC146(5),VT100, VT102(6), VT134(2)]*	14.54	6.60	
VL903	Lead-In Kit for 3 Watering Lines *[VP001(11), VC146(5),VT100, VT101, VT102(6), VT134(2)]*	15.90	7.21	
VL904	Lead-In Kit for 4 Watering Lines *[VP001(12), VC146(5),VT100, VT101(2), VT102(6), VT134(2)]*	17.21	7.81	
VL905	Lead-In Kit for 5 Watering Lines *[VP001(13), VC146(5),VT100, VT101(3), VT102(6), VT134(2)]*	18.55	8.41	
VL906	Lead-In Kit for 6 Watering Lines *[VP001(15), VC146(5),VT100, VT101(4), VT102(6), VT134(2)]*	21.12	9.58	
VL907	Lead-In Kit for 7 Watering Lines *[VP001(16), VC146(5),VT100, VT101(5), VT102(6), VT134(2)]*	22.46	10.19	
VL908	Lead-In Kit for 8 Watering Lines *[VP001(18), VC146(5),VT100, VT101(6), VT102(6), VT134(2)]*	25.04	11.36	

INLINE SHUTOFF ASSEMBLIES

820736	Inline Shutoff Assy - 18" Flexible Standpipe - for Alum Extrusion	0.84	0.38	
820737	Inline Shutoff Assy - 18" Flexible Standpipe Flat Cap - for Alum Extrusion	0.79	0.36	
VS318F	Inline Shutoff Assy - 18" Flexible Standpipe - for Conduit	0.71	0.32	
VS318F-FC	Inline Shutoff Assy - 18" Flexible Standpipe Flat Cap - for Conduit	0.67	0.30	
820762	Inline Shutoff Assy - 18" Flexible Standpipe, 1.25" / 33mm Perch Pipe	0.87	0.39	
820763	Inline Shutoff Assy - 18" Flexible Standpipe Flat Cap, 1.25" / 33mm Perch Pipe	0.83	0.37	
820738	Inline Shutoff Assy - 24" Flexible Standpipe - for Alum Extrusion	0.88	0.40	
820739	Inline Shutoff Assy - 24" Flexible Standpipe Flat Cap - for Alum Extrusion	0.84	0.38	
VS324F	Inline Shutoff Assy - 24" Flexible Standpipe - for Conduit	0.78	0.35	
VS324F-FC	Inline Shutoff Assy - 24" Flexible Standpipe Flat Cap - for Conduit	0.67	0.30	
820764	Inline Shutoff Assy - 24" Flexible Standpipe, 1.25" / 33mm Perch Pipe	0.92	0.42	
820765	Inline Shutoff Assy - 24" Flexible Standpipe Flat Cap, 1.25" / 33mm Perch Pipe	0.87	0.40	
820740	Inline Shutoff Assy - 30" Flexible Standpipe - for Alum Extrusion	0.96	0.44	
820741	Inline Shutoff Assy - 30" Flexible Standpipe Flat Cap - for Alum Extrusion	0.91	0.41	
VS330F	Inline Shutoff Assy - 30" Flexible Standpipe - for Conduit	0.79	0.36	
VS330F-FC	Inline Shutoff Assy - 30" Flexible Standpipe Flat Cap - for Conduit	0.67	0.30	
820766	Inline Shutoff Assy - 30" Flexible Standpipe, 1.25" / 33mm Perch Pipe	0.99	0.45	
820767	Inline Shutoff Assy - 30" Flexible Standpipe Flat Cap, 1.25" / 33mm Perch Pipe	0.95	0.43	
VV802	3/4" Ball Valve With Pipe Or Extrusion Clearance	0.24	0.11	

All inline shutoff assemblies include standpipe (with spring, shutoff ball and shutoff cap), 3/4" ball valve, and pipe clip or S hanger bracket.

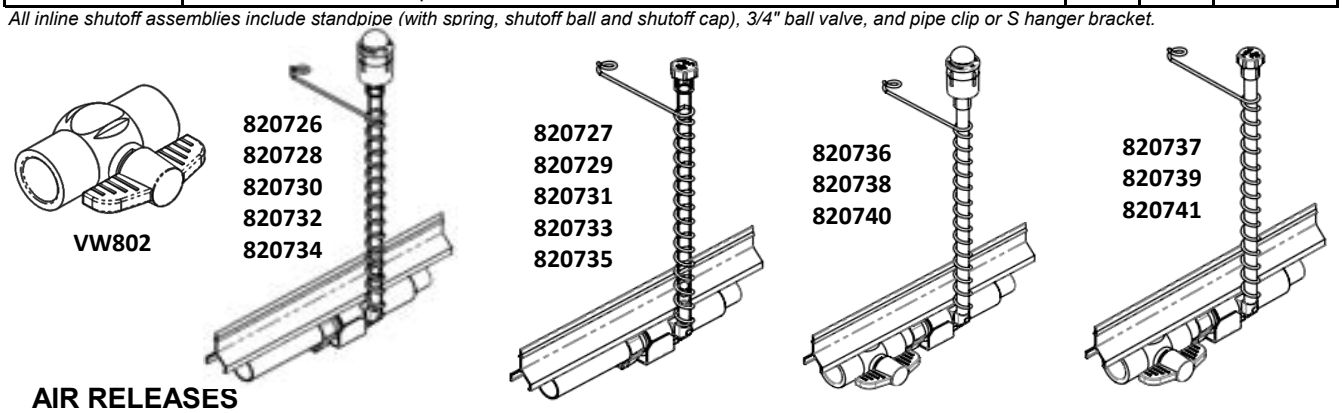

AIR RELEASES

820726	Air Release With Auto Shutoff & 24" Flex Standpipe - Aluminum Extrusion	0.58	0.26	
820727	Air Release With Auto Shutoff & 24" Flex Standpipe Flat Cap - Aluminum Extrusion	0.54	0.24	
VA800-24	Air Release With Auto Shutoff & 24" Flex Standpipe - Conduit	0.71	0.32	
820758	Air Release Kit with 24" Flex Standpipe, 1.25" / 33mm Perch Pipe	0.61	0.28	
820759	Air Release Kit with 24" Flex Standpipe with Flat Cap, 1.25" / 33mm Perch Pipe	0.61	0.28	
820728	Air Release With Auto Shutoff & 30" Flex Standpipe - Aluminum Extrusion	0.65	0.29	
820729	Air Release With Auto Shutoff & 30" Flex Standpipe Flat Cap - Aluminum Extrusion	0.61	0.28	
VA800-30	Air Release With Auto Shutoff & 30" Flex Standpipe - Conduit	0.74	0.33	
820760	Air Release Kit with 30" Flex Standpipe, 1.25" / 33mm Perch Pipe	0.68	0.31	
820761	Air Release Kit with 30" Flex Standpipe with Flat Cap, 1.25" / 33mm Perch Pipe	0.64	0.29	
VR209S	Left Body Only - for Air Release & Slope Regulator	0.11	0.05	

Toll-free: 1-800-99VALCO
Phone: (+1) 419-678-8731
Fax: (+1) 419-678-2200

FLOOR WATERING OPTIONS

FILTER KIT/BACKFLUSH

CATALOG #	ITEM DESCRIPTION	SHIP WEIGHT LBS.	SHIP WEIGHT KG.	LIST PRICE EACH
VF122	Filter Kit/Backflush Hookup (30 Micron Filter, 15+ PSI)	9.25	4.20	
VF122L	Filter Kit/Backflush Hookup – Low Pressure (50 Micron Filter, 4-15 PSI)	9.03	4.10	
VF122-H	Filter Kit - without Hookup or Gauges (30 Micron Filter, 15+ PSI)	6.95	3.15	
VF122L-H	Filter Kit - without Hookup or Gauges – Low Pressure (50 Micron Filter, 4-15 PSI)	6.74	3.06	

WATER METERS *(kits includes [2] VT132 -3/4" PVC female adapter S X thread)*

CATALOG #	ITEM DESCRIPTION	SHIP WEIGHT LBS.	SHIP WEIGHT KG.	LIST PRICE EACH
820370	**WATER METER KIT**, GAL, LOCAL, 5/8"X3/4", Brass Body, Line Size 3/4"	4.70	2.13	
820371	**WATER METER KIT**, GAL, DIGITAL, 5/8"X3/4", Brass Body, Line Size 3/4"	4.70	2.13	
820372	**WATER METER KIT**, MET, LOCAL, 5/8"X3/4", Brass Body, Line Size 3/4"	4.70	2.13	
820373	**WATER METER KIT**, MET, DIGITAL, 5/8"X3/4", Brass Body, Line Size 3/4"	4.70	2.13	
820374	**WATER METER KIT**, GAL, LOCAL, 5/8" X 3/4", Plastic Body, Line Size 3/4"	2.70	1.22	
820375	**WATER METER KIT**, GAL, DIGITAL, 5/8" X 3/4", Plastic Body, Line Size 3/4"	3.11	1.41	
820376	**WATER METER KIT**, MET, LOCAL, 5/8" X 3/4", Plastic Body, Line Size 3/4"	2.70	1.22	
820377	**WATER METER KIT**, MET, DIGITAL, 5/8" X 3/4", Plastic Body, Line Size 3/4"	2.70	1.22	
820284	PVC Adapter, 1" X 3/4", slip x slip, schedule 40	0.10	0.05	
VT100	3/4" PVC Tee S X S X S	0.01	0.00	
VT102	3/4" PVC 90 ELL S X S	0.07	0.03	
VT132	3/4" PVC Female Adapter S X Thread	0.05	0.02	
VV801	3/4" Ball Valve	0.26	0.12	
VX127	3/4" Union S X S	0.16	0.07	

MEDICATOR

CATALOG #	ITEM DESCRIPTION	SHIP WEIGHT LBS.	SHIP WEIGHT KG.	LIST PRICE EACH
VM501	Dosatron Medicator Kit (D25RE2) - Dilution Range 1:500 to 1:50 (.2% to 2%)	3.41	0.04	
820341	Dosatron Medicator Kit (D25RE5) - Dilution Range 1:100 to 1:20 (1% to 5%)	4.00	1.81	
VM515	Dosatron Medicator Kit (D128R) - Dilution Range 1:200/1:128/1:100 (0.5% to 1%)	0.00	0.00	
VM507	Hook-Up Kit for Medicator	1.46	0.66	
VM504	D25RE2 Rebuild Kit	0.27	0.12	
VM511	Seal Replacement Kit for D25RE2	0.20	0.09	

Medicators can be used in high or low pressure systems from 4.3-85 PSI (.3-5.86 Bar).

CLEANERS / SOLUTIONS

CATALOG #	ITEM DESCRIPTION	SHIP WEIGHT LBS.	SHIP WEIGHT KG.	LIST PRICE EACH
VC200	Pro Clean (1 Gal)	4.75	2.15	
PM10TS	10TS Water Treatment System	25.00	11.34	
PMCPABU1	Water Treatment Solution - 5 Gallon (PARAFOS)	50.00	22.68	

LINE SHOCKERS - International Sales Only

CATALOG #	ITEM DESCRIPTION	SHIP WEIGHT LBS.	SHIP WEIGHT KG.	LIST PRICE EACH
820461	Shocker Unit - 50/60Hz - 110V - Pulsating, 0.2 Joules Output	3.00	1.36	
820458	Shocker Unit - 50/60Hz - 220V - Pulsating, 0.2 Joules Output	2.82	1.28	

***see page 22-11 for non-electric anti-roosting solutions**

Toll-free: 1-800-99VALCO
Phone: (+1) 419-678-8731
Fax: (+1) 419-678-2200

VAL-CO FLOOR WATERING PIPE COMPONENTS

DETERMINE CATALOG NUMBERS TO ORDER PIPE COMPONENTS

Select Pipe Components	1 Pipe Assembly	2 Support Type	3 Hanger Type	4 Support Drop Kits	5 Winching Cable	6 Nipple Drinker	7 Optional Accessories

1. Pipe Assembly (see page 22-10 for our popular complete package watering pipe kits)

NUMBER OF Drinker DRINKERS	DRINKER SPACING		Weight		Universal Saddle Assemblies	
	IN	CM	LBS.	KG.	Part Number	List Price
3	40.0	101.6	1.0	0.4	820703	
4	30.0	76.2	1.0	0.5	820704	
5	24.0	61.0	1.0	0.5	820705	
6	20.0	50.8	1.0	0.5	820706	
7	17.1	43.5	1.0	0.5	820707	
8	15.0	38.1	1.1	0.5	820708	
9	13.3	33.9	1.1	0.5	820709	
10	12.0	30.5	1.1	0.5	820710	
11	10.9	27.7	1.1	0.5	820711	
12	10.0	25.4	1.1	0.5	820712	
13	9.2	23.4	1.1	0.5	820713	
14	8.6	21.8	1.1	0.5	820714	
15	8.0	20.3	1.1	0.5	820715	
16	7.5	19.1	1.2	0.5	820716	
17	7.1	17.9	1.2	0.5	820717	
18	6.7	16.9	1.2	0.5	820718	
19	6.3	16.0	1.2	0.5	820719	
20	6.0	15.2	1.3	0.5	820720	
21	5.7	14.5	1.4	0.5	820721	
25	4.8	12.2	1.4	0.6	820725	

Pipe Assemblies include Val-Co Watering Pipe with Saddles & Coupler attached
25 Watering Pipe per Box / 750 Watering Pipe per Skid

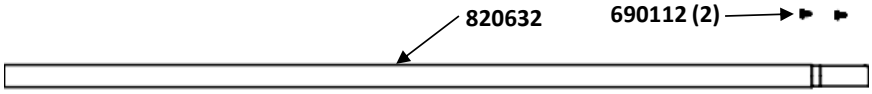

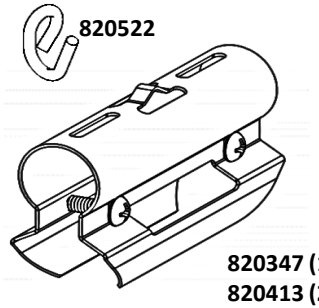

2. Support Type (1 per Pipe Assembly)

Part Number	Description	Ship Weight LBS.	Ship Weight KG.	List Price
VA316	Aluminum Extrusion Kit *(Includes: VA317 - Connector, VA318* - Extrusion & VA319 [2] - Screws)*	2.25	1.02	
820832	1.163" OD Conduit Kit *(Includes: 820632**- Conduit & 690112 - [2] Tek Screws)*	4.70	2.13	
820833	1.163" OD Swaged Conduit with Anti-Rotational Bracket Kit (Includes: 820632** - Conduit, 820347 - Anti-Rotational Coupler, 820413 - [2] screws, 690112 [2] - Screws, & 820522 - Hook)	5.09	2.31	
820649	1.05" OD x 20' Thick Wall Pipe with Anti-Rotational Clamps and Coupler Designed for Perching - (1) kit needed per every (2) 10' Watering pipe segments *(Includes: 631866 - Conduit, 820347 - Anti-Rotational Coupler, 820413 [4] - Screws, 631814 - Coupler Kit)*	19.21	8.71	
631865	1.25" OD x 20' Thick Wall Pipe - Designed for Perching Accessories **not** included: *820672 - Plastic Intermidiate Pipe Supports [5] per 10' segment* *820669 Metal Holding Clamp Assembly [1] per 10' segment*	17.78	8.06	

* Bulk packaging for VA318 is (300) pieces per 120"x 20" x 20" skid, weighing 690 pounds.
** Bulk packaging for 820632 is (210) pieces per 124" x 24" x 24" skid, weighing 1,020 pounds.

RECOMMENDED DENSITY PER Drinker

● Broilers - 15 ● Breeders - 12 ● Ducks - 10

Toll-free: 1-800-99VALCO
Phone: (+1) 419-678-8731
Fax: (+1) 419-678-2200

3. Hanger Type

820506

VA505

VH340K

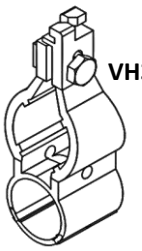
VH341K

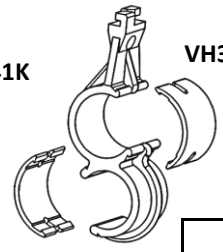
VH355K

Part Number	Description	Ship Weight LBS.	Ship Weight KG.	List Price
820506	Pipe Clip - Val-Co Aluminum Extrusion *(6 per 10' pipe section)*	0.01	0.00	
VA505	Pipe Clip - ChoreTime & Lubing Alum. Extrusion - *(6 per 10' pipe section)*	0.01	0.00	
VH340K	Clamp Hanger Bracket Kit for 1" Conduit	0.05	0.02	
VH341K	Ribbed Hanger Bracket for 3/4" Pipe Kit	0.04	0.02	
VH355K	S-Hanger Bracket Kit for 1" Conduit	0.06	0.03	

820506 & VA505 - 6 per 10' Pipe Section
All Others - 5 per 10' Pipe Section

4. Support Drop Kits

VA600

VE345

VA601

820387K

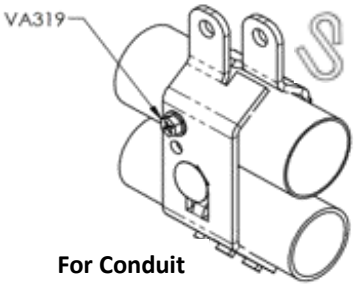

For Conduit

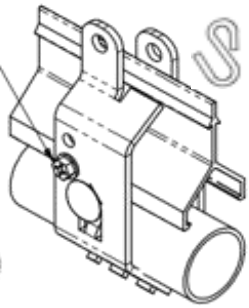

For Aluminum

VEN91104

VS341

Part Number	Description	Ship Weight LBS.	Ship Weight KG.	List Price
820410	Aluminum Extrusion Support Drop Kit *(Includes: VA600, VD319 [10ft cord], VEN91104, VE345 Sta-Kon & VS341)*	0.21	0.10	
820421	Aluminum Extrusion Support Drop Kit without Winching *(Includes: VA600 & VS341)*	0.02	0.01	
820423	Aluminum Extrusion Winch Kit, with Shocker Wire Option *(Includes: VA601 [5], VD319 [10ft cord], VEN91104, VE345 Sta-Kon & VS341)*	0.30	0.14	
820411	Conduit Winch Kit *(Includes: VD319 [10ft cord], VEN91104, VE345 Sta-Kon & VS341)*	0.16	0.07	
820412	Conduit Perch Winch Kit *(Includes: VEN91104, VE345 Sta-Kon, 820387K, VD319 [10' cord] & VS341)*	0.38	0.17	
VEN91104	7/8" Nylon Swivel Pulley	0.04	0.02	
VS341	1/8" Cord Adjustment Strap *	0.01	0.00	

One (1) Support Drop Kit is required for each Support Drop needed.

*** Conduit Supported pipe orders without winching will require one (1) VS341 per drop**

5. Winching Cable (11.1 feet per Pipe Assembly)

Part Number	Description	Ship Weight LBS.	Ship Weight KG.	List Price
VC343	Cable, 1/8" 7x7 Galvanized Aircraft Wire Rope	0.03	0.01	
VC343-Q1000	Cable, 1/8" 7x7 Galvanized Aircraft Wire Rope - 1000' Roll	25.00	11.34	

Toll-free: 1-800-99VALCO
Phone: (+1) 419-678-8731
Fax: (+1) 419-678-2200

6. Drinker Selection

Part Number	Description	Notes	Ship Weight LBS.	Ship Weight KG.	List Price
VR150	Roaster Drinker		0.02	0.01	
VR150L	Roaster Drinker Low Flow		0.02	0.01	
VR150H	Roaster Drinker High Flow		0.02	0.01	
VR150HX	Roaster Drinker Extra High Flow		0.02	0.01	
VR150LPFA	Roaster Drinker E-Z Trigger, Low Flow		0.02	0.01	
VR150PFA	Roaster Drinker E-Z Trigger		0.02	0.01	
VR150HPFA	Roaster Drinker High Flow, E-Z Trigger		0.02	0.01	
VR150HXPFA	Roaster Drinker Extra High Flow, E-Z Trigger		0.02	0.01	
VBL150	Caged Layer Drinker		0.02	0.01	
VQ150HPFA	Quencher Drinker		0.02	0.01	
VQ150MPFA	Quencher High Flow		0.02	0.01	
VBR250	Breeder Drinker	VBS100 Shield or VC150 Clip Optional	0.02	0.01	
VBR250L	Breeder Drinker Low Flow	VBS100 Shield or VC150 Clip Optional	0.02	0.01	
VA150	Aqua-V Drinker		0.02	0.01	
VA150H	Aqua-V Drinker High Flow		0.02	0.01	
VA150PFA	Aqua-V Drinker PFA EZ-Trigger		0.02	0.01	
VA150LPFA	Aqua-V Drinker Low Flow PFA EZ-Trigger		0.02	0.01	
VA150HPFA	Aqua-V Drinker High Flow PFA EZ-Trigger		0.02	0.01	
VR150PFAZS	Roaster Drinker PFA w/Ziggity Short Plug		0.02	0.01	

FLOOR WATERING PIPE KITS

Watering Kits

CATALOG #	ITEM DESCRIPTION	SHIP WEIGHT LBS.	SHIP WEIGHT KG.	LIST PRICE
VK102A00NC	VR150 10 Hole Aluminum Extrusion Pipe Kit	3.97	1.80	
VK122A00NC	VR150 12 Hole Aluminum Extrusion Pipe Kit	4.01	1.82	
VK152A00NC	VR150 15 Hole Aluminum Extrusion Pipe Kit	4.13	1.87	
VK102D00NC	VR150PFA 10 Hole Aluminum Extrusion Pipe Kit	3.94	1.79	
VK122D00NC	VR150PFA 12 Hole Aluminum Extrusion Pipe Kit	4.01	1.82	
VK152D00NC	VR150PFA 15 Hole Aluminum Extrusion Pipe Kit	4.12	1.87	
VQ102I00NC	VQ150HPFA 10 Hole Aluminum Extrusion Pipe Kit	3.92	1.78	
VQ122I00NC	VQ150HPFA 12 Hole Aluminum Extrusion Pipe Kit	3.99	1.81	
VQ152I00NC	VQ150HPFA 15 Hole Aluminum Extrusion Pipe Kit	4.10	1.86	

All Kits include: 820506 6 PIPE CLIP, ANTI-ROTATION, FOR ALUMINUM EXTRUSION
8207**xx** VP001 W/**xx** VS180 SADDLES **x**" SPACING **xx** HOLES, 820127 CPLR
VA317 1 ALUMINUM CONNECTOR 8" (PAT.)
VA318 1 VAL-CO ALUMINUM EXTRUSION, WATER LINE SUPPORT, 10 FT LONG
VA319 2 #8x1/2" SELF-DRILLING SCREW,
VA600 1.25 HANGER CLIP 1" (HANGS ALUMINUM EXTRUSION)
(**xx**) DRINKERS
VS341 1.25 CORD ADJUSTMENT STRAP, 1/8"

Toll-free: 1-800-99VALCO
Phone: (+1) 419-678-8731
Fax: (+1) 419-678-2200

7. Recommended Watering Accessories (Optional)

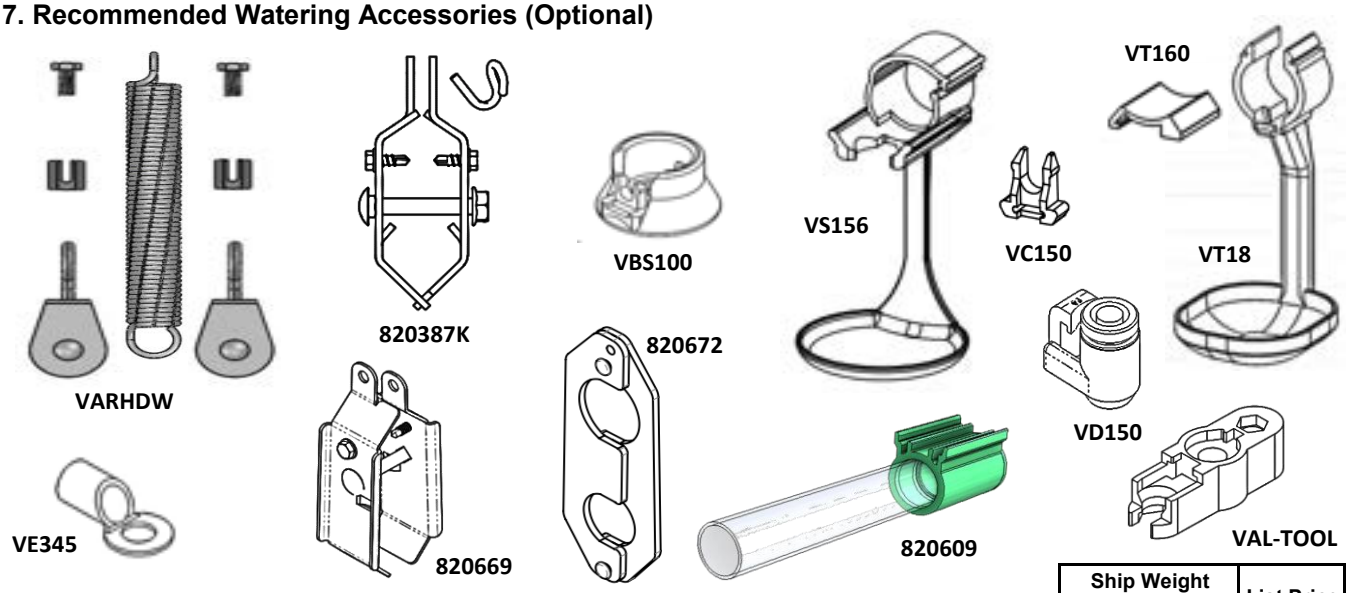

Part Number	Description	Ship Weight LBS.	Ship Weight KG.	List Price
VARHDW	Anti-Roost Hardware Bag for Conduit & Aluminum 1 per Line	0.30	0.14	
820640	Spinner, Stop Roost, 22" Long (1 needed fo every 2' of Watering line.)	0.27	0.12	
VG342	Cable, 1/16, 1x7 Galvanized Aircraft Wire (Anti-Roost) - per Foot	0.01	0.00	
VG342-Q1000	Cable, 1/16, 1x7 Galvanized Aircraft Wire (Anti-Roost) - 1000' Roll	20.70	9.39	
VD319	Cord, 1/8" Natural Solid Braid Polyester	0.00	0.00	
VD319-Q1000	Cord, 1/8" Natural Solid Braid Polyester - 1000' Roll	7.00	3.18	
VE345	1/8" Wire Cable Closed Sta-kon	0.03	0.01	
VBS100	Breeder Shield	0.02	0.01	
VC150	Drinker Drinker Clip (Recommended for Heavy Breeders 1 per Drinker)	0.00	0.00	
820387K	Anti-Rotational Galvanized Holding Clamp Bracket Kit	0.29	0.13	
820669	Holding Clamp Set and Hardware for 1.25"/33mm Perch Pipe (1 per coupler)	0.30	0.14	
820672	Intermidiate Pipe Suport Kit for 1.25"/33mm Perch Pipe (4 per 10' Water Pipe)	0.04	0.02	
VS156	Cup for Aluminum Extrusion or Conduit	0.05	0.02	
VT160	Cup Clip, Used for Conduit Suspension with VT180 Cup	0.01	0.00	
VT180	Deep Cup for Aluminum Extrusion with VKPxx Pipe or used with Conduit anytime (conduit requires VT160 to be ordered as well)	0.08	0.03	
VD150	Dummy Drinker	0.01	0.00	
VAL-TOOL	Universal Drinker Tool	0.03	0.01	
VAL-LOTT-STICK	Val Lott Stick for Measuring Drinker Water Flow Rate	1.50	0.68	
MANAGEMENTSTICK	Val Management Stick - Water Line Height Stick (English)	0.13	0.06	
MANAGEMENTSTICK-SPANISH	Val Management Stick - Water Line Height Stick (Spanish)	0.11	0.05	
820609	Viewport - 3/4" Clear PVC with 820127 Coupler	0.12	0.05	

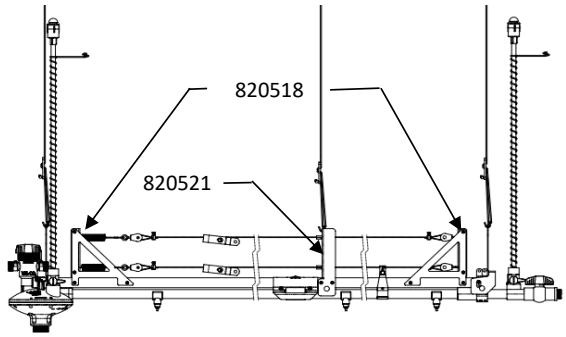

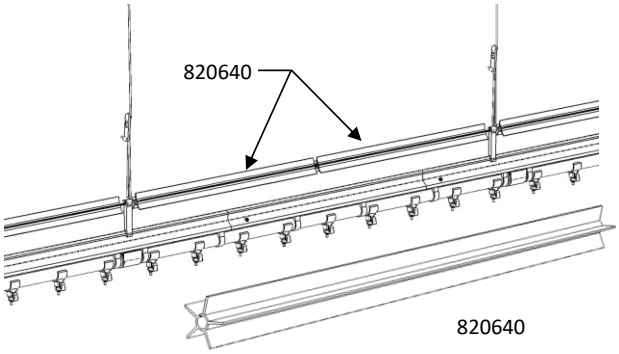

Two-Wire Anti-Roost System

820518	Dual Line End Bracket Assembly (1 for end-line regulators or 2 per water line for use with mid-line regulators) (Can only be used with Conduit, not Aluminum Extrusion)	3.00	1.36	
820521	Dual Line Mid Bracket Assembly (1 every 5' Watering line) (Can only be used with Conduit, not Aluminum Extrusion)	0.94	0.43	
820640	Spinner, Stop Roost, 22" Long (Snaps onto Anti-Roost Wire) (if used with aluminum extrusion, VA601 clips must be used)	0.27	0.12	

Toll-free: 1-800-99VALCO
Phone: (+1) 419-678-8731
Fax: (+1) 419-678-2200

DRINKER INFO

(SEE DESCRIPTIVE DRAWINGS OF EACH DRINKER ON PAGE 22-13)

CATALOG NUMBER	DESCRIPTION
VR150	ROASTER DRINKER The standard for broilers and larger birds. Bigger trigger pin resists wear and holds 300% more water than the Broiler Drinker.
VR150L	ROASTER DRINKER Roaster Drinker with lower water flow.
VR150H	ROASTER HI-FLOW DRINKER Same features as Roaster Drinker with higher flow for warmer temperatures.
VR150HX	ROASTER XTRA HI-FLOW DRINKER Roaster Drinker with higher flow for even warmer temperatures.
VR150LPFA	ROASTER CONTOLLED FLOW DRINKER WITH PRECISION FEATHER ACTION Roaster controlled flow drinker with feather side action where the slightest touch will produce water flow.
VR150PFA	ROASTER DRINKER WITH PRECISION FEATHER ACTION Roaster drinker with feather side action where the slightest touch will produce water flow.
VR150HPFA	ROASTER HI-FLOW DRINKER WITH PRECISION FEATHER ACTION Roaster Hi-Flow drinker with feather side action where the slightest touch will produce water flow.
VR150HXPFA	ROASTER XTRA HI-FLOW DRINKER WITH PRECISION FEATHER ACTION Roaster Xtra Hi-Flow drinker with feather side action where the slightest touch will produce water flow.
VBL150	CAGED LAYER / BROILER DRINKER Drinker for caged layers or broilers under six pounds (2.7kg)
VA150	LAYER / BROILER DRINKER Drinker for layers and smaller broilers.
VA150H	LAYER / BROILER DRINKER Hi-Flow Drinker for layers and smaller broilers.
VA150PFA	LAYER / BROILER DRINKER WITH PRECISION FEATHER ACTION Drinker for layers and smaller broilers with feather side action where the slightest touch will produce water flow.
VA150LPFA	LAYER / BROILER DRINKER WITH PRECISION FEATHER ACTION Low-Flow Drinker for layers and smaller broilers with feather side action where the slightest touch will produce water flow.
VA150HPFA	LAYER / BROILER DRINKER WITH PRECISION FEATHER ACTION Hi-Flow Drinker for layers and smaller broilers with feather side action where the slightest touch will produce water flow.
VQ150HPFA	QUENCHER DRINKER Standard flow, industry standard drinker.
VQ150MPFA	QUENCHER DRINKER High flow, industry standard drinker.
VBR250	BREEDER DRINKER Drinker built to use with breeders with up action only
VBR250L	BREEDER CONTROLLED FLOW DRINKER Drinker built to use with breeders with up action only

DRINKER INFO

	Controlled Flow Green O-Ring (VO140G)	Standard Flow Green O-Ring (VO140G)	High Flow Black O-Ring (VO140B)	Extra High Flow Red O-Ring (VO140R)
Premium Roaster *Yellow Body / Yellow Cap*	 VR150L Roaster, Controlled Flow	 VR150 Roaster, Standard Flow	 VR150H Roaster, High Flow	 VR150HX Roaster, Extra High Flow
Premium Precision Feather Action *Yellow Body / Green Cap*	 VR150LPFA EZ Trigger Roaster, Controlled Flow	 VR150PFA EZ Trigger Roaster, Standard Flow	 VR150HPFA EZ Trigger Roaster, High Flow	 VR150HXPFA EZ Trigger Roaster, Extra High Flow
Caged Layer / Broiler Drinker *Yellow Body / Yellow Cap*		 VBL150 Layer Drinker, Standard Flow		
Quencher Precision Feather Action *Green Body / Green Cap*			 VQ150HPFA Quencher Drinker, High Flow	 VQ150MPFA Quencher Drinker, Extra High Flow
Breeder Drinker *Yellow Body / Yellow Cap*	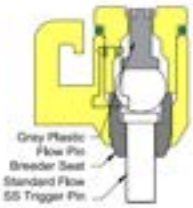 VBR250L Breeder Drinker, Controlled Flow	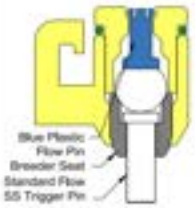 VBR250 Breeder Drinker, Standard Flow		
Aqua-V *Lime Green Body / Yellow Cap*		 VA150 Aqua-V Drinker, Standard Flow	 VA150H Aqua-V Drinker, High Flow	
Aqua-V Precision Feather Action *Lime Green Body / Green Cap*	 VA150LPFA EZ Trigger Aqua-V Drinker, Controlled Flow	 VA150PFA EZ Trigger Aqua-V Drinker, Standard Flow	 VA150HPFA EZ Trigger Aqua-V Drinker, High Flow	

DRINKER FLOW RATES

Roaster Series Flow Rates vs. Inches [Centimeters] of Water

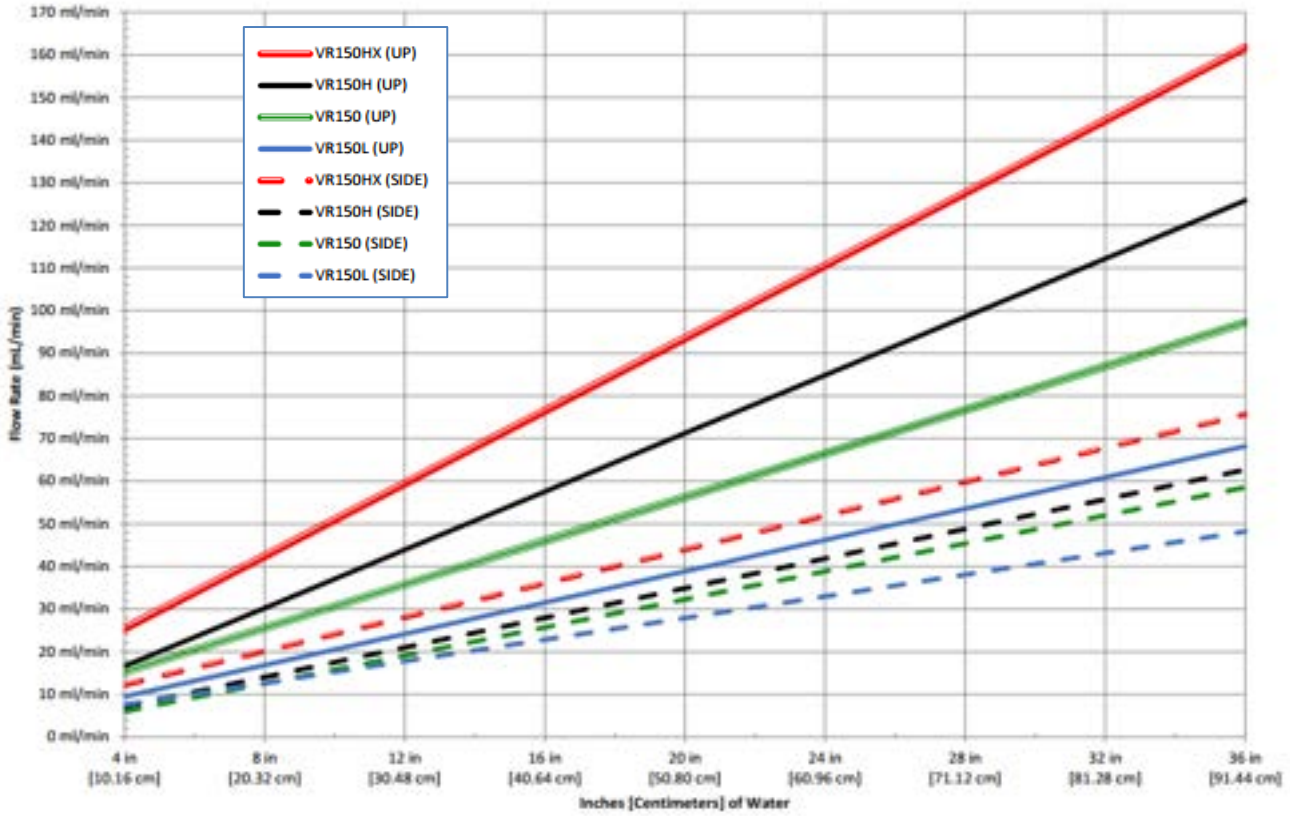

Roaster PFA Flow Rates vs. Inches [Centimeters] of Water

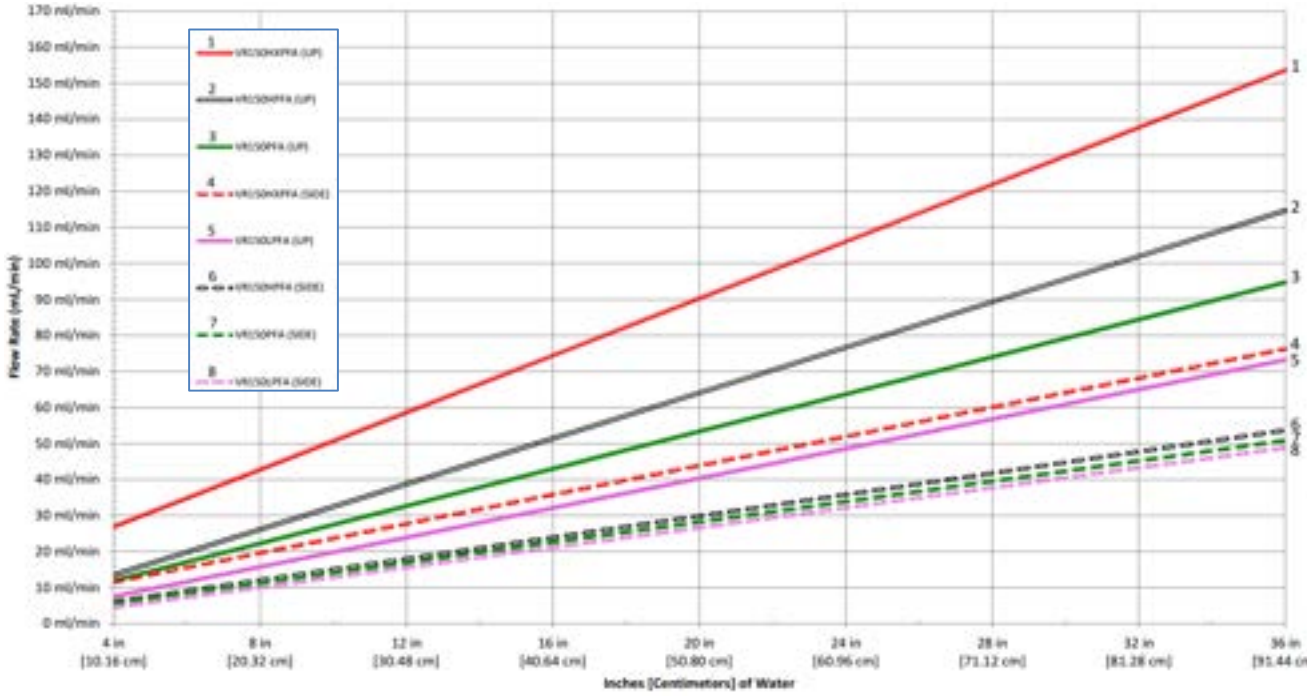

If a drinker produces more water than a bird can consume it causes wet floors. A higher flow rate can be generated with a taller standpipe. This will ensure the necessary water volume at growout. As natural wear occurs in the drinker, there will be room to back off pressure to prolong the life of the drinker.

DRINKER FLOW RATES

Broiler / Layer Drinker Flow Rates vs. Inches [Centimeters] of Water

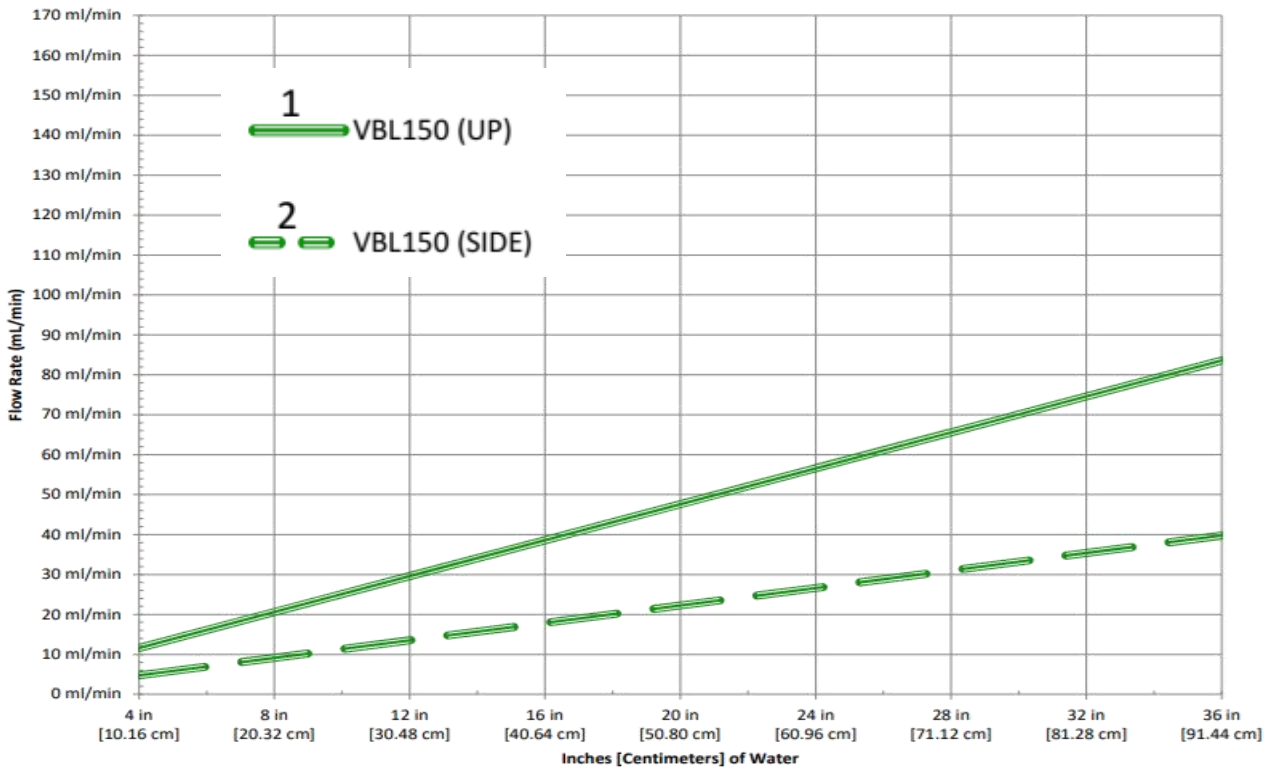

Breeder Drinker Flow Rates vs. Inches [Centimeters] of Water

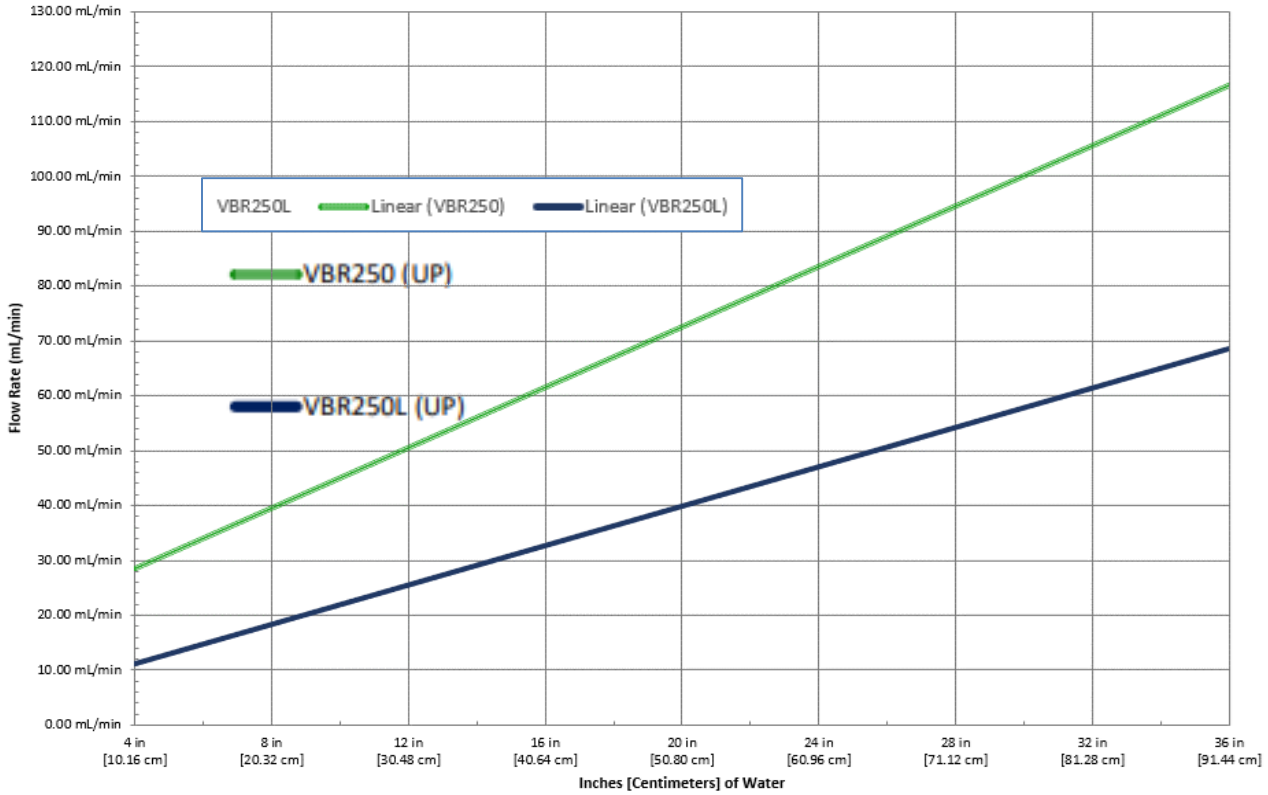

If a drinker produces more water than a bird can consume it causes wet floors. A higher flow rate can be generated with a taller standpipe. This will ensure the necessary water volume at growout. As natural wear occurs in the drinker, there will be room to back off pressure to prolong the life of the drinker.

Toll-free: 1-800-99VALCO
Phone: (+1) 419-678-8731
Fax: (+1) 419-678-2200

DRINKER FLOW RATES

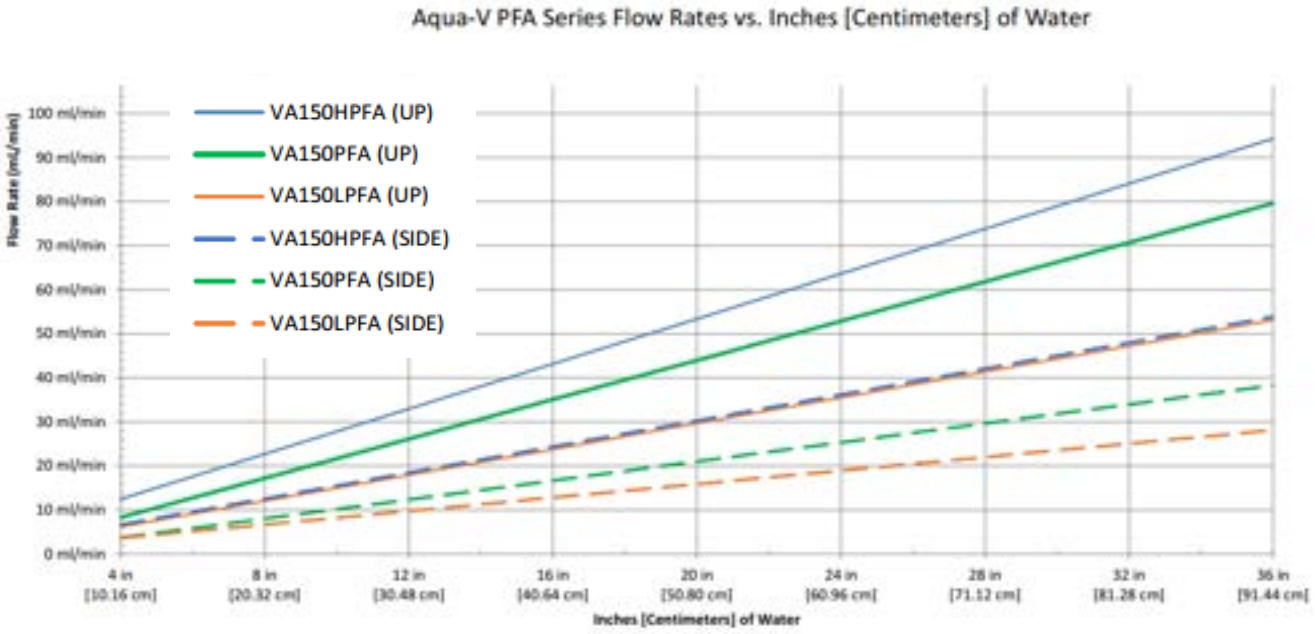

If a drinker produces more water than a bird can consume it causes wet floors. A higher flow rate can be generated with a taller standpipe. This will ensure the necessary water volume at growout. As natural wear occurs in the drinker, there will be room to back off pressure to prolong the life of the drinker.

DRINKER FLOW RATES

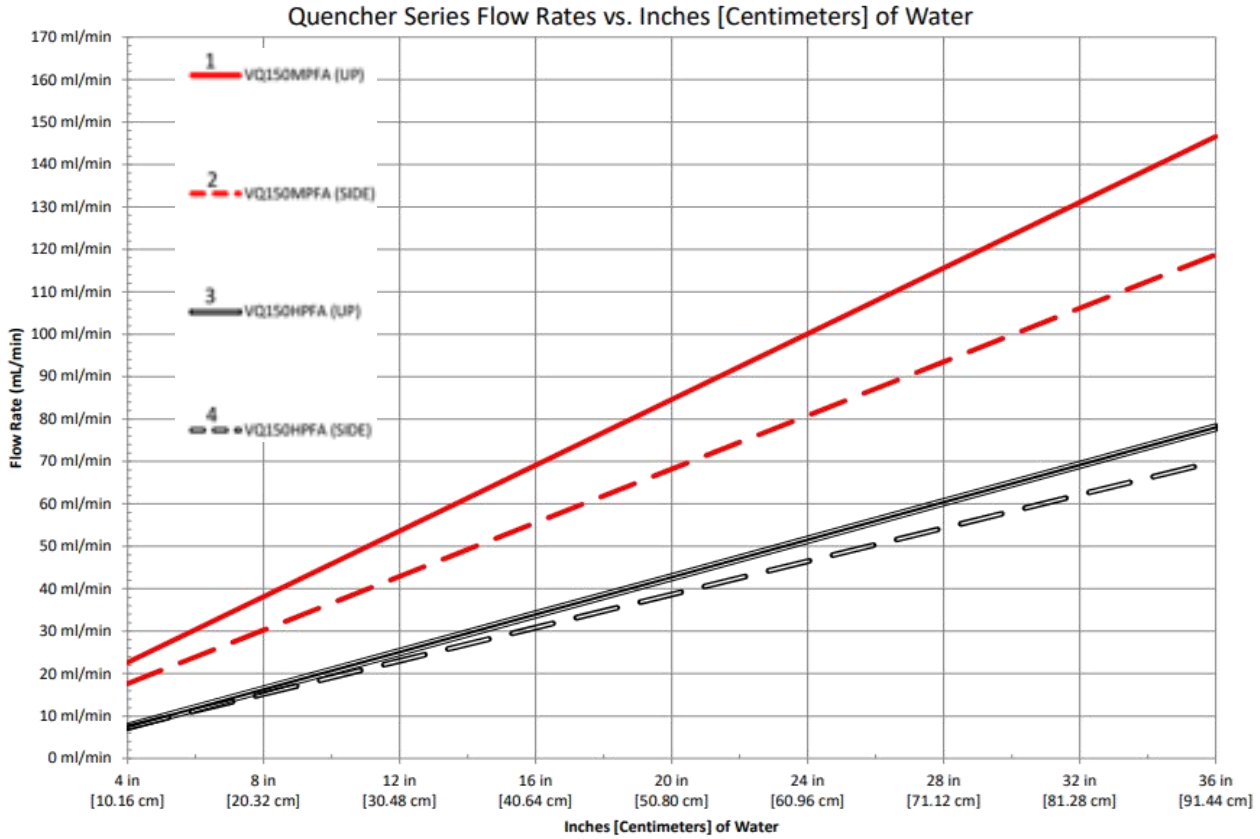

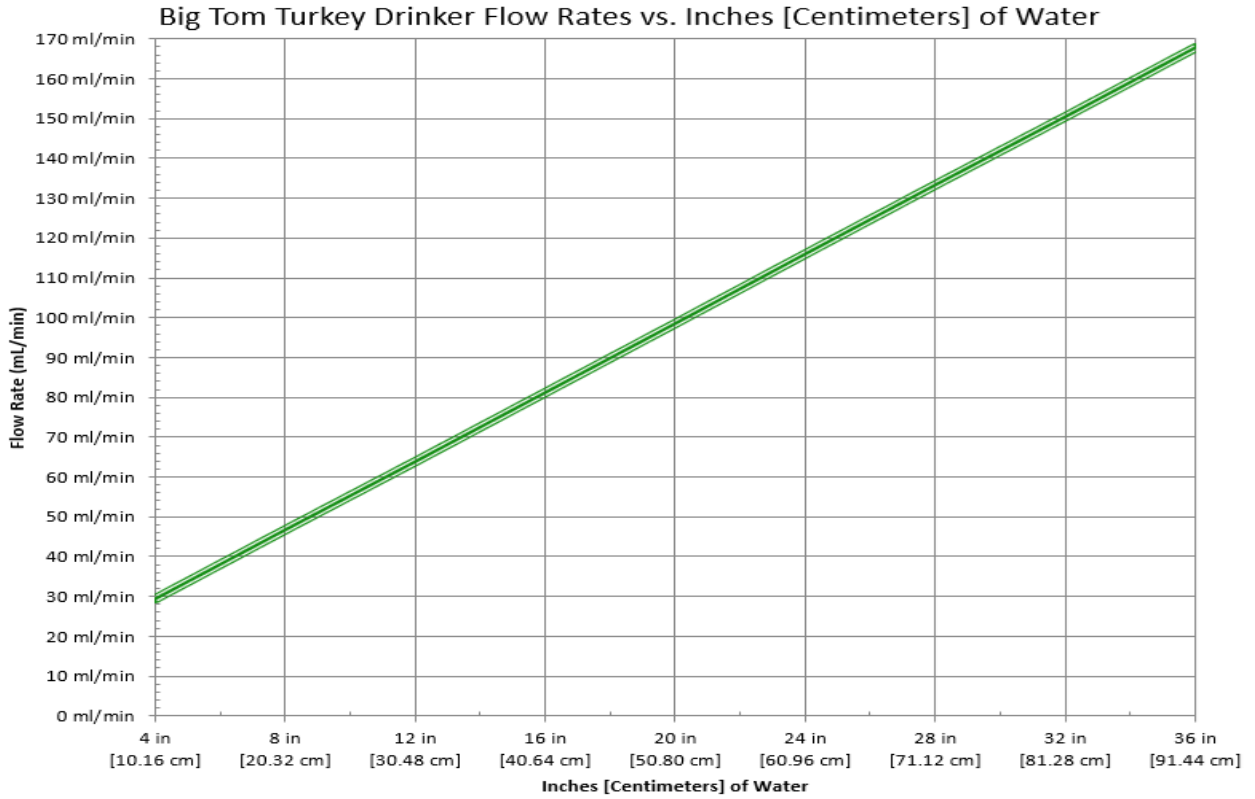

If a drinker produces more water than a bird can consume it causes wet floors. A higher flow rate can be generated with a taller standpipe. This will ensure the necessary water volume at growout. As natural wear occurs in the drinker, there will be room to back off pressure to prolong the life of the drinker.

Toll-free: 1-800-99VALCO
Phone: (+1) 419-678-8731
Fax: (+1) 419-678-2200

FLOOR WATERING OPTIONS

COMPETITOR CHANGEOVER & REPLACEMENT ITEMS

Order Drinkers Separately

CATALOG #	ITEM DESCRIPTION	SHIP WEIGHT LBS.	SHIP WEIGHT KG.	LIST PRICE
VA505	Pipe Clip Val Chore-Time Hanger Clip for CTB Aluminum	0.01	0.00	
	Note: The drinker pipe must be replaced with new Val pipe, but the existing suspension and winching for the line can be used. Refer to page 22-08 for the Chore-Time replacement pipe kit.			
VCTB110-K	Chore-Time Saddle Adapter Kit	0.01	0.00	
820104	LUBING ADAPTER KIT Works for 22mm square pipe systems EXCLUDING OPTI-GROW	0.02	0.01	
	Note: This kit does not work as an adaptor for Optigrow drinkers due to the larger diameter hole/drinker body of the Optigrow			
VP500RK	Val Plasson Saddle Kit	0.02	0.01	
	Note: This is a direct replacement for the Plasson drinker - includes saddle and seal. There is no need to replace pipe or suspension & winching hardware.			
VP556	Val Plasson Saddle Tool for applying saddle adapter	0.26	0.12	
VPG555RK	Val Plasson Adapter Seal Note: Replacement seal for Val Plasson Saddle Kit.	0.00	0.00	
VZA150	Val Ziggity Saddle Kit	0.01	0.00	
	Note: This kit includes a replacement adapter (with new O-ring) to replace the Ziggity twin style drinker. This adapter will accept any Val standard J-lock drinker. This retro-fit saddle locks into the Ziggity twin lock saddle, then the Val J-lock can be installed into the adapter. With this kit there is no need to replace the pipe or suspension/winching hardware.			
VZA150-Q50	Val Ziggity Saddle Kit - Quantity of 50	0.40	0.18	
820056	Val Ziggity Adapter Seal *Note: Replacement seal for Val Ziggity Saddle Kit*	0.00	0.00	
820258	Val Cumberland Saddle Kit	0.01	0.00	
820258-Q50	Val Cumberland Saddle Kit - Quantity of 50	0.40	0.18	
820188	Val Cumberland Adapter Seal *Note: Replacement seal for Val Cumberland Saddle Kit*	0.00	0.00	
VH341	Ribbed Hanger Bracket for 3/4" Galvanized Pipe (1.05" OD) With Nut & Bolt	0.03	0.02	
VR150C	Roaster Drinker for Clark	0.02	0.01	
VR150THD	Roaster Drinker - Threaded	0.02	0.01	
VL150THD	Layer Drinker - Threaded	0.02	0.01	
	Note: These drinkers are a replacement for Lubing (excluding Optigrow) or any similar European style threaded drinker. The internal components of these drinkers are the same as a standard Val Drinker. An advantage of these drinkers is that after the drinker has been threaded into the pipe the internal components can be removed from the drinker without removing the unit from the pipe. These drinkers can be ordered as a Roaster, Broiler, or Layer as indicated above.			
VS205	Glued Saddle for Small Square Pipe - For Threaded Drinker - 1/4" (6.35mm) Stem	0.01	0.01	
VS205L	Glued Saddle for Small Square Pipe - For Threaded Drinker - 11/32" (8.73mm) Stem	0.01	0.00	
VS405	Glued Saddle for Large Square Pipe - For Threaded Drinker - 1/4" (6.35mm) Stem	0.01	0.00	
VS405L	Glued Saddle for Large Square Pipe - For Threaded Drinker - 11/32" (8.73mm) Stem	0.01	0.00	
	Note: VS205L & VS405L are replacement saddle for square pipe that previously had threaded drinkers; the stem is slightly larger than the standard glued saddle so it can be glued into the existing threaded hole.			

Toll-free: 1-800-99VALCO
Phone: (+1) 419-678-8731
Fax: (+1) 419-678-2200

TURKEY BELL DRINKERS

TURKEY BELL DRINKERS

CATALOG #	ITEM DESCRIPTION	SHIP WEIGHT LBS.	SHIP WEIGHT KG.	LIST PRICE
VTB105	Turkey Bell Drinker Kit - without Flange *(Includes Tubing, Valve Assembly, Clip and Strap)*	2.39	1.1	
VTB135	Turkey Bell Drinker - without Flange - Base Assembly	2.27	1.0	
VTB100	Turkey Bell Drinker Kit - with Flange *(Includes Tubing, Valve Assembly, Clip and Strap)*	3.00	1.4	
VTB130	Turkey Bell Drinker - with Flange - Base Assembly	2.60	1.2	

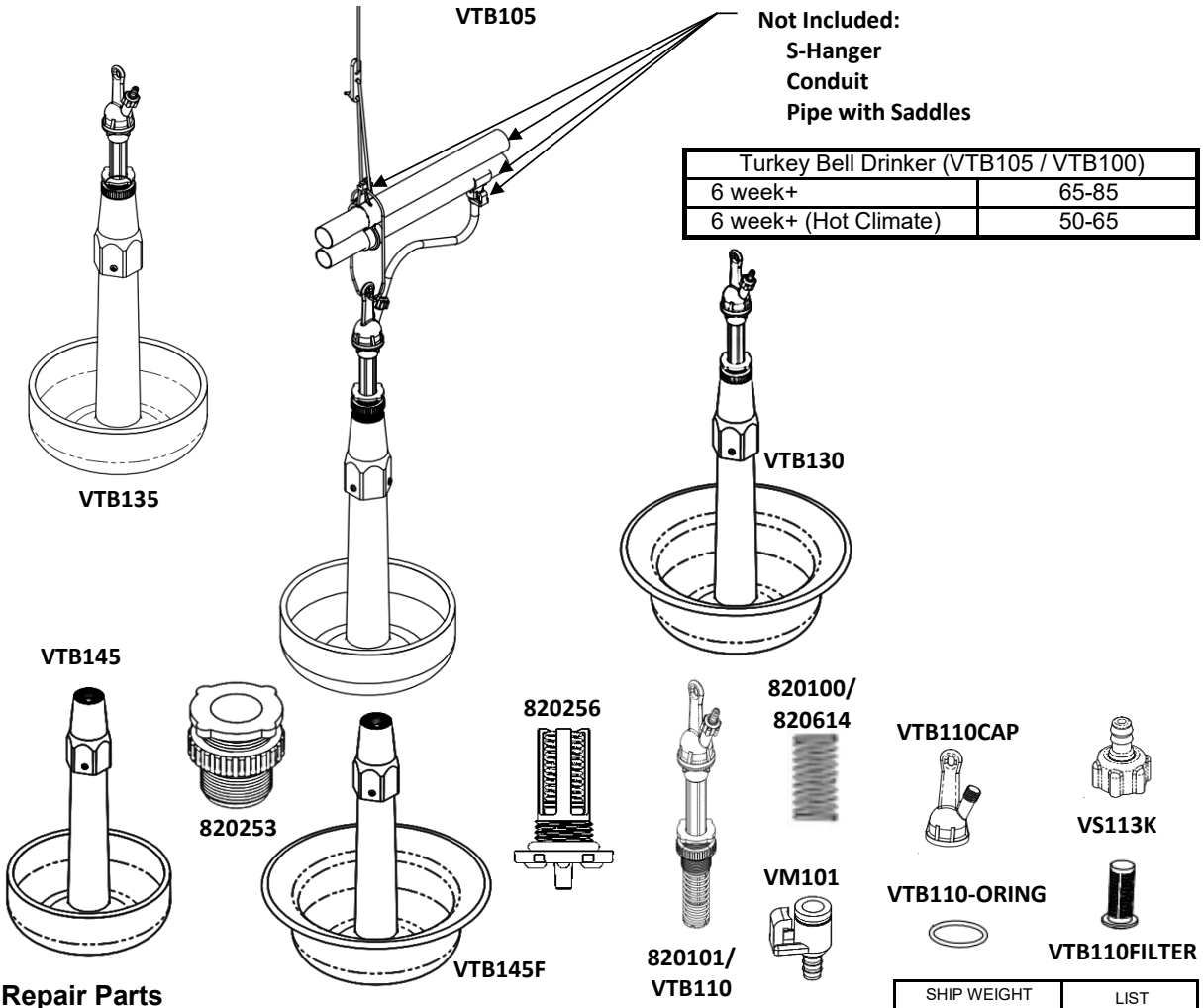

Turkey Bell Drinker (VTB105 / VTB100)	
6 week+	65-85
6 week+ (Hot Climate)	50-65

Repair Parts

CATALOG #	ITEM DESCRIPTION	SHIP WEIGHT LBS.	SHIP WEIGHT KG.	LIST PRICE
VTB145	Turkey Bell Drinker - Bowl Assembly (for VTB135)	1.40	0.6	
820100	Turkey Bell Drinker - Large Stainless Steel Spring (for VTB135)	0.07	0.0	
820101	Turkey Bell Drinker Valve Assembly - Stainless Steel Spring for (VTB135)	0.25	0.1	
VTB145F	Turkey Bell Drinker with Flange - Bowl Assembly (for VTB130)	2.25	1.0	
820614	Turkey Bell Drinker - Large Stainless Steel Spring (for VTB130)	0.08	0.0	
VTB110	Turkey Bell Drinker Valve Assembly - Stainless Steel Spring for (VTB130)	0.26	0.1	
820256	Turkey Bell Drinker - Stianless Steel Trigger Pin Assembly	0.05	0.0	
820253	Turkey Bell Drinker - Adjustment Nut Assembly	0.04	0.0	
VM101	Mini Drinker Adapter with Nipple Body	0.01	0.0	
VTB110CAP	Turkey Bell Valve - Cap without O-Ring	0.02	0.0	
VS113K	Male Barb Stud and Nut Assembly	0.03	0.0	
BG222	1/4" Green PVC Tubing (price per foot)	0.03	0.0	
VTB110-ORING	Turkey Bell Valve - O-ring (for inside VTB110CAP)	0.01	0.0	
VTB110FILTER	Turkey Bell Valve - Stem Filter	0.00	0.0	

VAL-CO FLOOR WATERING PIPE KITS - TURKEY

Select Pipe Components	1 Pipe	2 Support	3 Hanger Type	4 Support	5 Winching	6 Drinkers	7 Float Ball	8 Optional Accessories

1. 10' Long Pipe Assembly

NUMBER OF DRINKERS	Drinker Spacing		Weight		Part Number	List Price
	IN	CM	lbs.	Kgs.		
3	40.0	18.1	1.15	0.52	820703	
4	30.0	13.6	1.17	0.53	820704	
5	24.0	10.9	1.18	0.54	820705	
6	20.0	9.1	1.19	0.54	820706	
7	17.1	7.8	1.19	0.54	820707	
8	15.0	6.8	1.32	0.60	820708	
9	13.3	6.0	1.23	0.56	820709	
10	12.0	5.4	1.38	0.63	820710	
11	10.9	4.9	1.25	0.57	820711	
12	10.0	4.5	1.64	0.74	820712	

Pipe assemblies include Val-Co Watering Pipe with Saddles & Coupler attached
25 Watering Pipe per Box / 750 Watering Pipe per Skid

2. Support Type (10' long and 1 need per Pipe Assembly)

Part Number	Description	LBS.	KG.	List Price
VA316	Aluminum Extrusion Kit *(Includes: VA317 - Connector, VA318 - Extrusion & VA319 [2] - Screws)*	2.25	1.02	
820832	1.163" OD Conduit Kit (Includes: 820632- Conduit & 690112 - [2] Tek Screws)	4.70	2.13	
820833	1.163" OD Swaged Conduit with Anti-Rotational Bracket Kit (Includes: 820632 - Conduit, 820347 - Anti-Rotational Coupler, 820413 - [2] screws, 690112 [2] - Screws, & 820522 - Hook)	5.09	2.31	

* Bulk packaging for VA318 is (300) pieces per 120"x 20" x 20" skid, weighing 690 pounds.
** Bulk packaging for 820632 is (210) pieces per 124" x 24" x 24" skid, weighing 1,020 pounds.

3. Hanger Type (5 minimum per 10' watering pipe - Big Tom Drinkers count towards this number)

VH340K	Clamp Hanger Bracket Kit for 1.163" Conduit	0.05	0.02	
VH355K	S-Hanger Bracket Kit for 1.163" Conduit	0.06	0.03	
820506	Anti-rotational Pipe Clip for Aluminum Extrusion (2 needed per 10')	0.01	0.00	
VH340AL	Hanger Bracker with Nut & Bolt for Aluminum Extrusion (used with VC340)	0.07	0.03	
VC340	Hanger Bracket Clip (used with VH340AL)	0.01	0.00	

820506

VH355K

VH340K
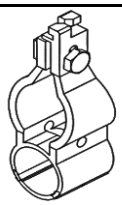
VH340AL
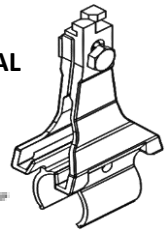
VC340

4. Support Drop Kits (Lines need to be supported every 8-10')

Conduit can be supported by wrapping drop cord around the conduit or attaching it to either 820387K or 820347 (comes with 820833). Aluminum extrusion the drop cord must be attached to 820387K every 8-10'

820387K	Holding Clamp for Conduit or Aluminum. Required every 8-10' If no Anti-Roost measures are taken, system must be supported every 4-5'	0.29	0.13	
VA601	2" Hanger Clips for Aluminum and anti-roost method	0.03	0.01	
VS341	1/8" Height Adjustment Strap - 1 per drop	0.01	0.00	

VS341

VA601
VA319
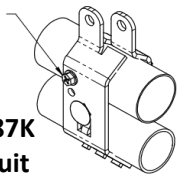
820387K
Conduit
VA319
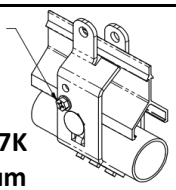
820387K
Aluminum
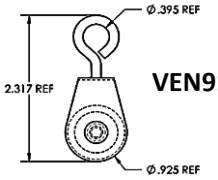

VEN91104

Toll-free: 1-800-99VALCO
Phone: (+1) 419-678-8731
Fax: (+1) 419-678-2200

FLOOR WATERING OPTIONS

5. Winching

CATALOG #	ITEM DESCRIPTION	SHIP WEIGHT LBS.	SHIP WEIGHT KG.	LIST PRICE
VC343	1/8" Cable, 7 x 7 Galvanized (per Ft.)	0.03	0.01	
VE345	1/8" Wire Cable Closed Stakon	0.03	0.01	
VD319	1/8" Polyester Solid Braid Natural Cord (per Ft.)	0.00	0.00	
VD319-Q1000	1/8" Polyester Solid Braid Natural Cord (1000' Roll)	7.00	3.18	
VEN91104	7/8" Nylon/Zinc Swivel Pulley	0.04	0.02	

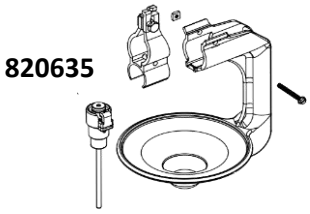

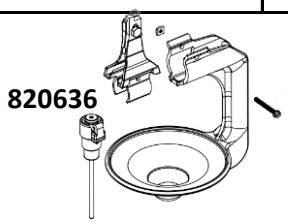

6. Drinker

820635	Big Tom Pro Turkey Large Cup Kit (universal Saddle and Conduit)	0.55	0.25	
820636	Big Tom Pro Turkey Large Cup Kit (universal Saddle and Aluminum)	0.55	0.25	

7. Float Ball (Should be used if Birds are less than 2 weeks in age)

820629	Green Float Ball - 1.575" Diameter	0.02	0.01	

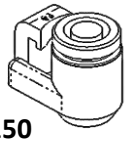

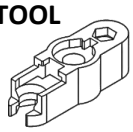

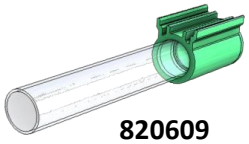

8. Accessories

VARHDW	Anti-Roost Hardware Bag for Conduit & Aluminum 1 per Line	0.30	0.14	
820640	Spinner, Stop Roost, 22" Long (1 needed fo every 2' of Watering line.)	0.27	0.12	
VG342	Cable, 1/16, 1x7 Galvanized Aircraft Wire (Anti-Roost) - per Foot	0.01	0.00	
VG342-Q1000	Cable, 1/16, 1x7 Galvanized Aircraft Wire (Anti-Roost) - 1000' Roll	20.70	9.39	
VD150	Dummy Drinker	0.01	0.00	
VAL-TOOL	Universal Drinker Tool	0.03	0.01	
820609	Viewport - 3/4" Clear PVC with 820127 Coupler	0.12	0.05	

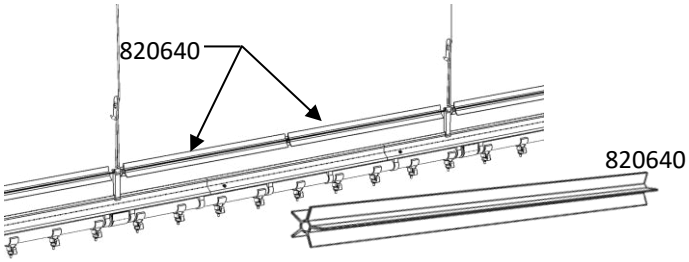

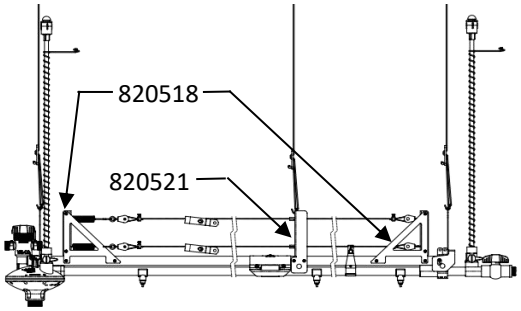

Two-Wire Anti-Roost System

820518	Dual Line End Bracket Assembly - Conduit Only (1 for end-line regulators or 2 per water line with mid-line regulators)	3.00	1.36	
820521	Dual Line Mid Bracket Assembly (1 every 5' Watering line) - Conduit Only	0.94	0.43	
820640	Spinner, Stop Roost, 22" Long (Snaps onto Anti-Roost Wire) (if used with aluminum extrusion, VA601 clips must be used)	0.27	0.12	

Toll-free: 1-800-99VALCO
Phone: (+1) 419-678-8731
Fax: (+1) 419-678-2200

FLOOR WATERING OPTIONS

Mini Drinkers

CATALOG #	ITEM DESCRIPTION		SHIP WEIGHT LBS.	SHIP WEIGHT KG.	LIST PRICE
VM100	Trough Mini Drinker with Adapter - for Conduit	80-100 Chicks 50-70 Ducklings	1.07	0.49	
VM200	Trough Mini Drinker with Adapter - for Aluminum Ext.		2.34	1.06	
VM101	Mini Drinker Adapter W/ Drinker Body		0.01	0.00	
VM102	Valve Assy W/ Bumper		0.02	0.01	
VM103	Float		0.02	0.01	
VM104	Triple Hanger Bracket For Mini Drinker		0.12	0.05	
VM105	Cover Plate For Mini Drinker		0.04	0.02	
VM106	Trough For Mini Drinker		0.68	0.31	
VM107	Bumper For Mini Drinker		0.03	0.01	
VM111	Single Hanger Bracket For Aluminum Suspension		0.08	0.04	

TruSeal™ Replacement Standpipe Caps

820295	Direct replacement standpipe cap for Flexible standpipes	0.05	0.02	
820611	Direct replacement standpipe cap for Rigid standpipes	0.06	0.03	
820348	TruSeal rigid standpipe kit. Includes cap and float ball	0.06	0.03	
820349	TruSeal flex standpipe kit. Includes cap and float ball	0.06	0.03	
VC025TS	TruSeal flex cap kit includes cap and glue on adapter	0.06	0.03	
VS130	Spring for 18" flex standpipe when using TruSeal Cap	0.17	0.07	
VS132	Spring for 24" flex standpipe when using TruSeal Cap	0.23	0.10	
VS133	Spring for 30" flex standpipe when using TruSeal Cap	0.28	0.13	
VS134	Spring for 36" flex standpipe when using TruSeal Cap	0.34	0.15	

Replacement Standpipes (for VSPxxRR after shutoff)

VSP12RA	RIGID SP ASSY, 12", 1/2" NPT	0.15	0.07	
VSP18RA	RIGID SP ASSY, 18", 1/2" NPT	0.26	0.12	
VSP24RA	RIGID SP ASSY, 24", 1/2" NPT	0.30	0.14	
VSP30RA	RIGID SP ASSY, 30", 1/2" NPT	0.27	0.12	
VSP36RA	RIGID SP ASSY, 36", 1/2" NPT	0.32	0.14	
VSP12RA-FC	RIGID SP ASSY, 12", 1/2" NPT with Flat Cap	0.16	0.07	
VSP18RA-FC	RIGID SP ASSY, 18", 1/2" NPT with Flat Cap	0.19	0.09	
VSP24RA-FC	RIGID SP ASSY, 24", 1/2" NPT with Flat Cap	0.23	0.10	
VSP30RA-FC	RIGID SP ASSY, 30", 1/2" NPT with Flat Cap	0.35	0.16	
VSP36RA-FC	RIGID SP ASSY, 36", 1/2" NPT with Flat Cap	0.40	0.18	

Replacement Standpipe

VSP24FY	FLEX SP ASSY, 24", Replacement *[Flex Tube & TruSeal]*	0.11	0.05	

Miscellaneous

VE326	Garden Hose Adapter	0.03	0.01	
VE326M	Garden Hose Adapter - Metric	0.03	0.01	
VF204C	Hose Clamp For 3/8" Urethane (Use On The VF205)	0.01	0.01	
VF205	Clear Urethane Hose (Transparent Yellow)	0.06	0.03	

FLOOR WATERING OPTIONS

Conduit

CATALOG #	ITEM DESCRIPTION	SHIP WEIGHT LBS.	SHIP WEIGHT KG.	LIST PRICE
820632	CONDUIT, 1.163" OD x .038"T x 10'L Swaged (210) pieces per 124" x 24" x 24" skid, weighing 1,020 pounds	4.70	2.13	
820347K	Anti-Rotational Bracket Kit Only	0.40	0.18	
820347K-Q30	Anti-Rotational Bracket Kit Only - Quantity of 30	10.99	4.98	
820522	S-Hook - Open x Closed with .45" useable length	0.01	0.00	
820422C	1.163 OD Conduit Cap for 820632 Conduit	0.01	0.00	
631866	1.05 OD x 20' 13GA Pipe with Holes	18.35	8.32	
631814	1.05 OD Pipe Coupler Kit	0.71	0.32	
631815	1.05 OD Pipe Plug	0.01	0.00	
VC345	Anti-Roost Clamp W/ 10-24X3/8 Hex head Screw	0.02	0.01	
VC346	Anti-Roost Spring	0.13	0.06	
VG342	1/16" Anti-Roost Wire	0.01	0.00	
820387K	Holding Clamp. Required every 10' for perching applications.	0.29	0.13	
820387K-Q25	Holding Clamp. Box of 25	8.11	3.68	
820479K	Holding Clamp Set with Anti-Tilt Hanger (Conduit and Aluminum Extrusion)	0.76	0.34	
820497K	Regulator Anti-Tilt Hanger Kit for Conduit *(includes hardware)*	0.33	0.15	
HB612E	Bolted Hanger Bracket for 1" (1.163" OD) Conduit No Hardware / No Clip	0.04	0.02	
VH340	Bolted Hanger Bracket for 1" (1.163" OD) Conduit With Hardware/No Clip	0.04	0.02	
VH341	Ribbed Bolted Hanger Bracket 3/4" (1.05" OD) Conduit with Hardware/No Clip	0.03	0.02	
VC340	Hanger Clip Only	0.01	0.00	
VN150	Nut For Hanger Bracket	0.01	0.00	
VN151	1/4" - 20 X 3/4" Bolt For Hanger Bracket Or 2 Per Winch	0.01	0.01	
VN152	Nut & Bolt For Hanger Bracket	0.03	0.01	
VH356	Clip only for VH355 S-Hanger Bracket	0.01	0.00	
820127	3/4" Coupler with O-ring and Full Rib	0.07	0.03	
VC145	3/4" Coupler with O-ring	0.06	0.03	

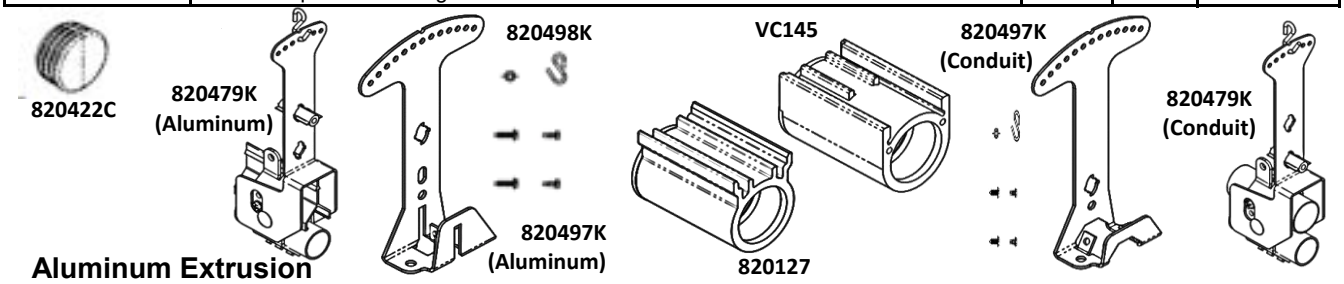

Aluminum Extrusion

VA317	Aluminum Connector - 8" (PAT.)	0.07	0.03	
VA318	10' Aluminum Extrusion (PAT.) (300) pieces per 120"x 20" x 20" skid, weighing 690 pounds	2.30	1.04	
VA318-Q300	10' Aluminum Extrusion (PAT.) - Bundle of 300	654.00	296.65	
VA319	Hex head Self Drilling Screw 1/2" Length	0.00	0.00	
VA320	Hex head Screw Holder	0.00	0.00	
820498K	Regulator Anti-Tilt Hanger Kit for Aluminum Extrusion	0.33	0.15	
820506	Pipe Clip (Attaches PVC Pipe To Aluminum)	0.01	0.00	
VA600	Hanger Clip 1" (Hangs Aluminum Extrusion)	0.01	0.00	
VA601	Hanger Clip 2" (Hangs Aluminum Extrusion)	0.03	0.01	
820127	3/4" Coupler with O-ring and Full Rib	0.07	0.03	

PVC Pipe & Valves

VP001	10' 3/4" Plain PVC Pipe	1.10	0.50	
VT194	1 1/2" PVC Pipe (10')	3.40	1.54	
VC100	PVC Pipe Cutter (1 1/4" Max Diameter)	1.05	0.48	
VC145	3/4" Coupler W/ O-Ring	0.06	0.03	
VO145	O-Ring For 3/4" Couplings	0.00	0.00	
730415	PVC Cement Glue (1/2 Pint)	1.00	0.45	
VG124	PVC Cement Glue (Pint)	1.14	0.52	
VG125-QT	PVC Cement Glue (Quart)	2.00	0.91	
VC210	PVC Cleaner (1/2 Pint)	0.55	0.25	
VV801	3/4" Ball Valve	0.26	0.12	
VX127	3/4" Pipe Union	0.16	0.07	

FLOOR WATERING OPTIONS

PVC FITTINGS

CATALOG #	ITEM DESCRIPTION	SHIP WEIGHT LBS.	SHIP WEIGHT KG.	LIST PRICE
VC146	3/4" PVC Coupling SXS	0.05	0.02	
VC148	3/4" PVC Cross SXSXSXS	0.01	0.00	
VT100	3/4" PVC Tee SXSXS	0.01	0.00	
VT101	3/4" PVC Tee SXSX 1/2" Thread	0.09	0.04	
VT102	3/4" PVC 90 ELL SXS	0.07	0.03	
VT106	3/4" Female Slip X 1/2" FPT PVC Reducer	0.05	0.02	
VT107	3/4" Male Slip X 1/2" FPT Bushing	0.03	0.01	
VT130	3/4" PVC Tee SXSX Thread	0.01	0.00	
VT131	3/4" PVC Male Adapter SX Thread	0.04	0.02	
VT132	3/4" PVC Female Adapter SX Thread	0.05	0.02	
VT133	3/4" PVC 90 ELL SX Thread	0.04	0.02	
VT134	3/4" PVC 90 ELL SX 1/2" Thread	0.07	0.03	
VT135	3/4" PVC 90 Degree ELL SX 1/2" S	0.01	0.00	
VT141	1" PVC Male Adapter Thread X 3/4" S	0.01	0.00	
VT188	1/2" PVC Male Adapter 1/2" Slip X 1/2" Thread	0.03	0.02	
VT189	3/4" PVC Bushing SX 1/2" S Reducer	0.02	0.01	
VT190	1/2" PVC Tee SXSXS	0.00	0.00	
VT191	1/2" Coupling SXS	0.03	0.01	
VT192	1/2" PVC 90N ELL SXS	1.42	0.64	
VT195	1 1/2" X 3/4" Bushing SXS	0.12	0.05	
VT196	1 1/2" PVC Cross DWV Fitting	7.16	3.25	
VT197	1/2" Union SXS	0.01	0.00	
VT198	1 1/2" PVC Coupler	0.16	0.07	
VT199	1 1/2" PVC Tee	0.36	0.16	
VT200	1 1/2" 90 Degree PVC ELL	0.28	0.13	
VT201	3/4" X 3/4" X 1/2" Tee SXSXS	0.10	0.05	
VT202	Bushing 1-1/2" X 1/2" THD.	0.10	0.04	
VT203	Bushing 1-1/2" X 1/2" S	0.00	0.00	
VT204	Socket 1-1/2" X 1-1/2" Barbed	0.14	0.06	
VT205	3/4" PVC Plug - Threaded	0.03	0.01	
VC143	Square-to-Round Connector (small square pipe)	0.02	0.01	
VC243	Square-to-Round Connector (large square pipe)	0.02	0.01	
820270	Square-to-Square Flex Coupler assembly (1.1" square pipe)	0.07	0.03	
820271	Square-to-Square Flex Coupler assembly (.875" square pipe)	0.06	0.03	

VR-202
V-MAX REGULATOR

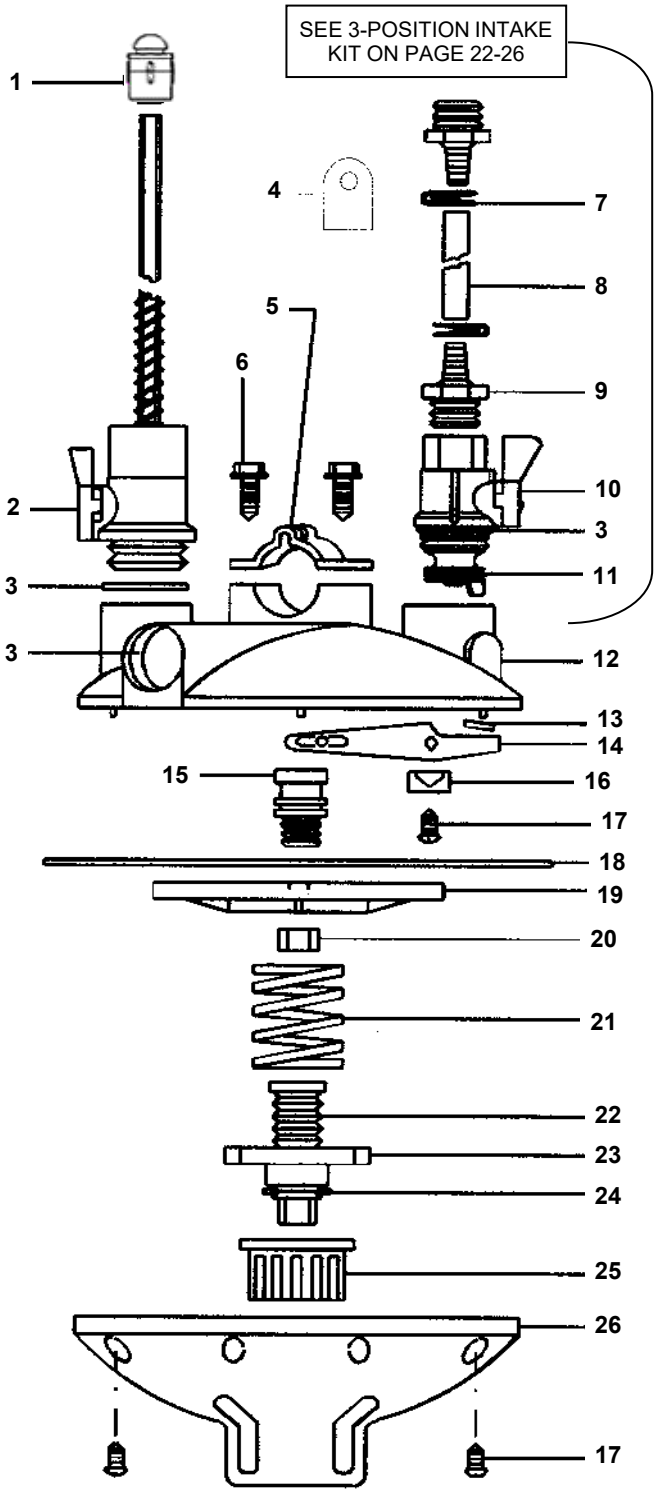

KEY	PART #	DESCRIPTION
1	820295	TruSeal Cap for Flex Standpipe
2		Standpipe - See page 22-05
3	VO145	O-Ring for 3/4" Couplings
4	VRP42	(2) Mounting Brackets for Aluminum Extrusion
5	VRP06	Pipe Clamp
6	VRP05-1	Screws for Pipe Clamp & Filter Bracket
7	VF204C	Hose Clamp for 3/8" Urethane
8	VRP48	PVC Yellow Reinforced Hose 3/8" 200 PSI (Drop Hose)
9	VRP45	1/2" Threaded Male Hose Connector (3/8" Barb)
10	VRP09	1/2" NPT Intake with Shutoff
	VRP09L	1/2" NPT Low Press Intake with S/O
11	VRP119	O-Ring for Bottom of RVH114
12	VRP11	Top Housing
13	VRP36G	Rubber Wafer Replacement
14	VRP12G	Pivot - New Style
15	VRP15	Diagram Bolt
16	VRP13	Pivot Brackets (Multiples of 2)
17	VRP14	Screw - 2 for Bracket or 9 for Bottom Housing
18	VRP16	Diaphragm
19	VRP52	Diaphragm Plate
20	VRP18	Diaphragm Nut
21	VRP19	Spring
22	VRP20	Adjustment Bolt
23	VRP25	Adjustment Collar
24	VRP21	Adjustment Bolt Pin
25	VRP24	Adjustment Knob
26	VRP22	Bottom Housing

Toll-free: 1-800-99VALCO
Phone: (+1) 419-678-8731
Fax: (+1) 419-678-2200

VR-202
V-MAX REGULATOR
WITH RFV160 3-POSITION INTAKE

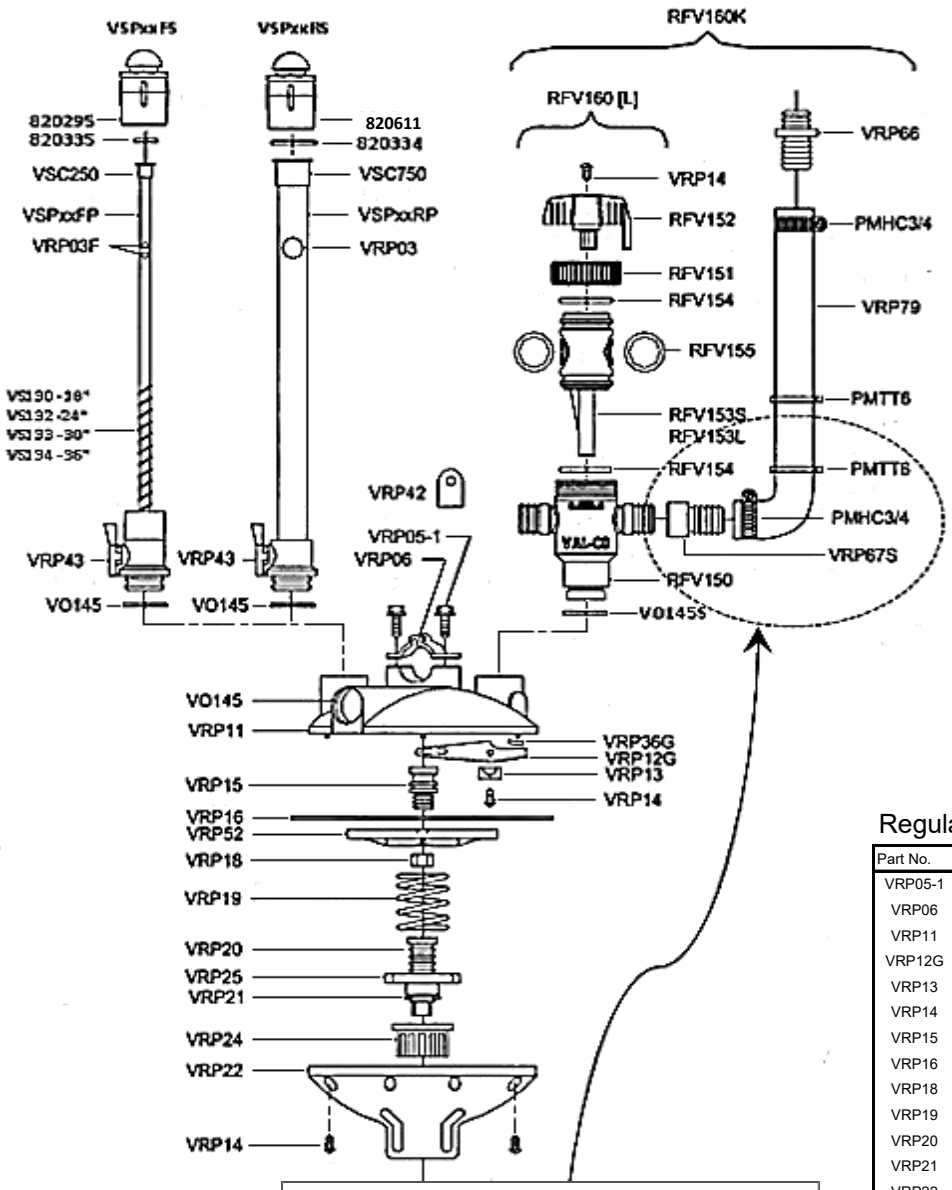

Part No.	Description
RFV160K	Regulator Flushin Intake Kit
RFV160	Regulator Flushing Intake Only
RFV150	Flushing Intake Housing
RFV151	Flushing Intake Cap
RFV152	Flushing Intake Handle
RFV153S	Flushing Intake Shaft High Pressure
RFV153L	Flushing Intake Shaft Low Pressure
RFV154	(2) Large O-Ring for RFV153
RFV155	(2) Small O-Ring for RFV153
VRP79	3/4" ID Yellow Hose
VRP66	3/4" Barb x 1/2" Male NPT
VRP67S	3/4" Barb x 3/4" Female NPT
PMHC3/4	(2) 3/4" Hose Clamp
VO145S	O-Ring for RFV150
PMTT6	(2) Wire Ties
VSPxxRS	xx" Rigid SP w/ Shutoff Ball & TruSeal
VRP03	Blue Rigid Standpipe Ball
VRP43	Shutoff for Standpipe
VSPxxRP	xx" Rigid SP Tube Only
820334	Rigid TruSeal Seal
820611	Rigid TruSeal
VO145	O-Ring for 3/4" Couplers
VSPxxFS	xx" Flex SP w shutoff Ball Y& TruSeal
VRP43	Shutoff for Standpipe
VS130	Spring for 18" Flex Standpipe
VS132	Spring for 24" Flex Standpipe
VS133	Spring for 30" Flex Standpipe
VS134	Spring for 36" Flex Standpipe
VSPxxFP	xx" Flex SP Tube Only
820335	Flex Truseal Seal
820295	Flex Truseal
VO145	O-Ring for 3/4" Couplers

Regulator Body 12002

Part No.	Description
VRP05-1	(2) Screws for Pipe Clamp/ Filter Bracket
VRP06	(1) Pipe Clamp
VRP11	Top Housing, VR202 Regulator
VRP12G	Pivot
VRP13	(2) Pivot Brackets - must purchase in multiples of 2
VRP14	Screws (2) Pivot Brackets & (9) Bottom Housing (1) Intake
VRP15	Diaphragm Bolt
VRP16	Diaphragm
VRP18	Diaphragm Nut
VRP19	Spring
VRP20	Adjustment Bolt
VRP21	Adjustment Bolt Pin
VRP22	Bottom Housing, VR202 Regulator
VRP24	Adjuistment Knob
VRP25	Adjustent Collar
VRP36G	Seal
VRP42	(2) Mounting Bracket for Aluminum Extrusion
VRP52	Diaphragm Plate

IMPORTANT!

SEE PAGE 22-28 FOR PROPER INSTALLATION OF REGULATOR WITH RFV160K 3-POSITION INTAKE.

CORRECT INSTALLATION WITH RFV160K 3-POSITION INTAKE

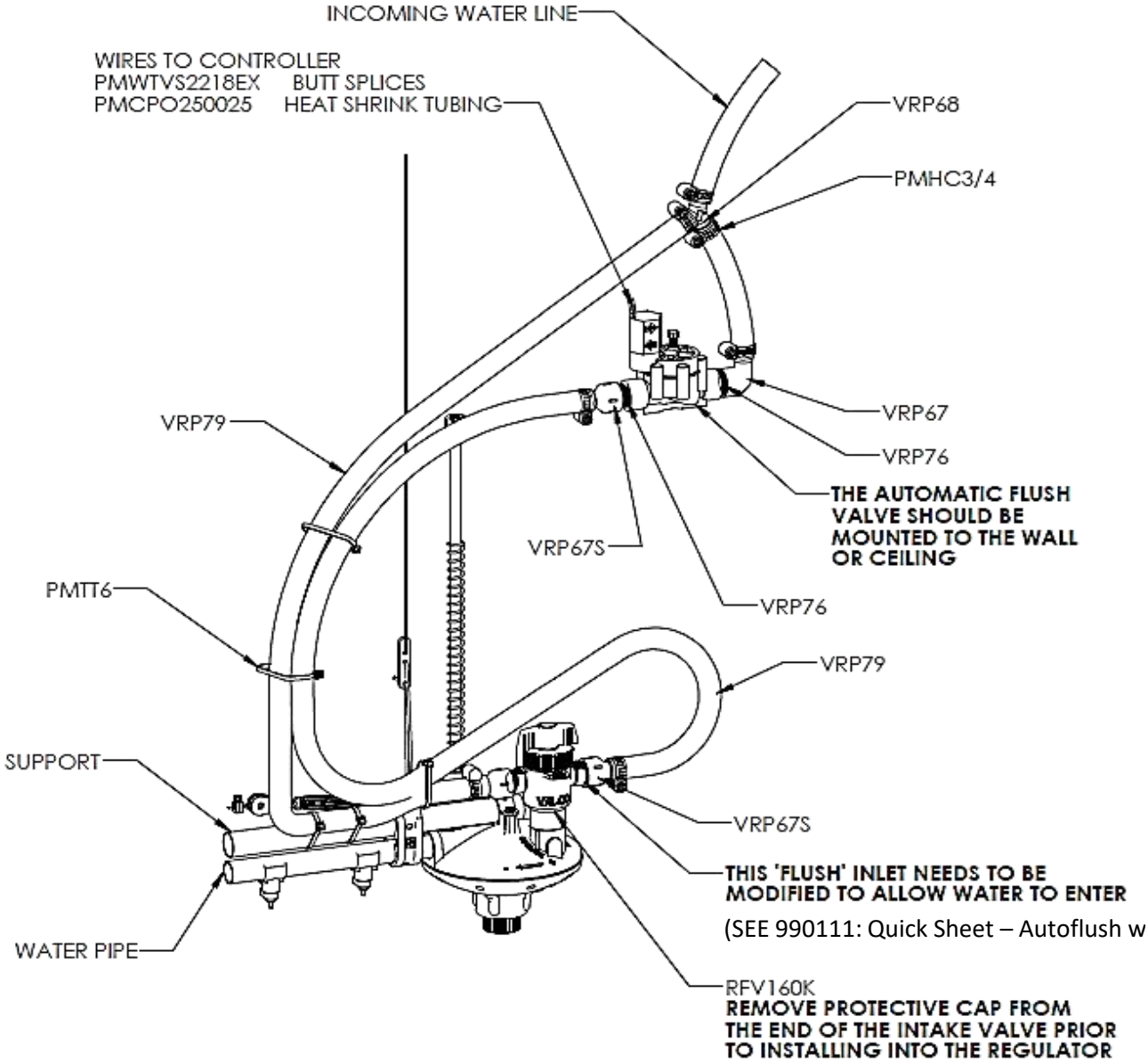

Part Number	Description	Ship Weight LBS.	Ship Weight KG.	List Price
VRP67	ELBOW,3/4 BARBx3/4 FNPT	0.06	0.03	
VRP67S	ADPTR,3/4 BARBx3/4 FNPT	0.05	0.02	
VRP68	¾" BARBED "Y" CONNECTOR	0.05	0.02	
VRP76	NIPPLE,3/4 MNPT	0.03	0.01	
VRP79	HOSE, 3/4" ID, YELLOW	0.20	0.09	
PMTT6	CABLE TIE, 7.5", SINGLE PC	0.00	0.00	
PMHC3/4	TRIDON HOSE CLAMP 3/4"	0.04	0.02	

3-POSITION FLUSHING INTAKE

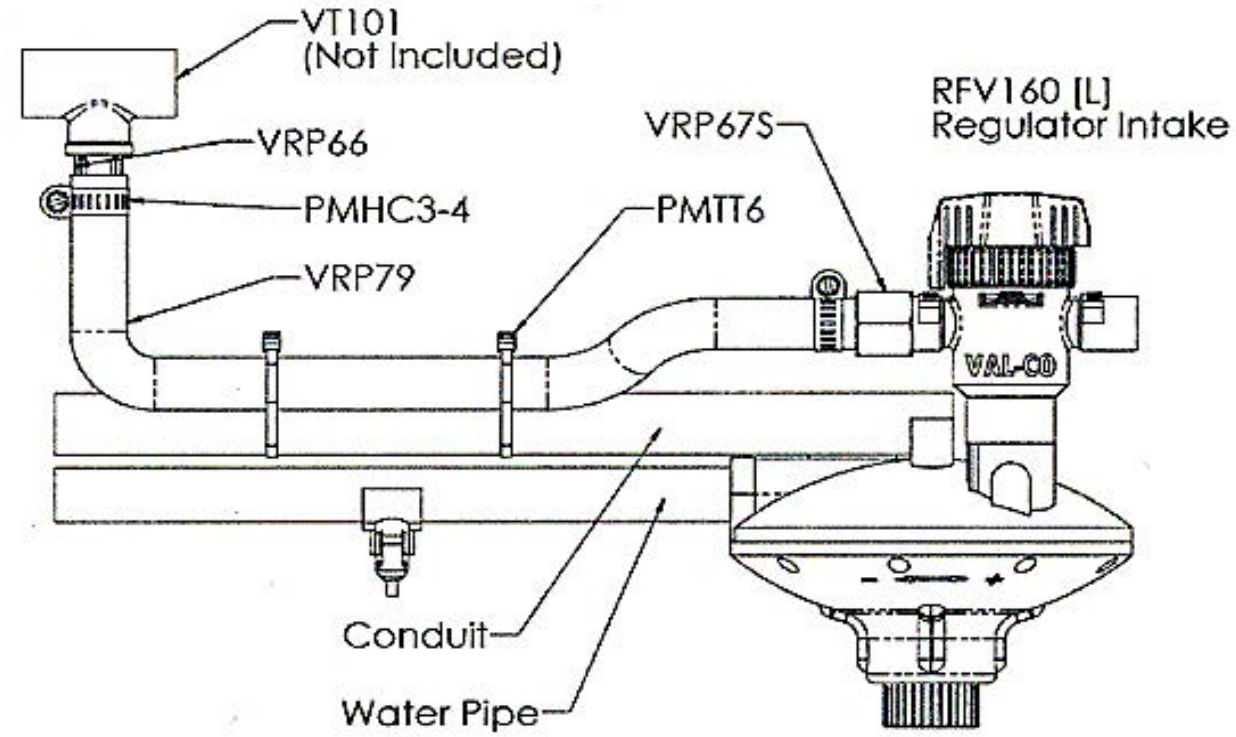

INTAKE POSITIONS

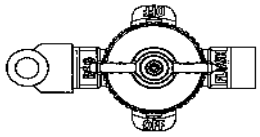

FLUSH

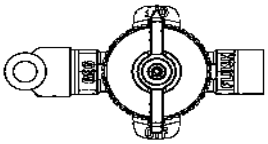

OFF

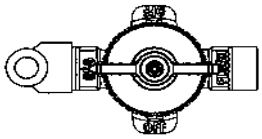

REGULATE (NORMAL)

Also reference RFV160K drawing on page 22-26

PART #	DESCRIPTION
RFV160	3-Position Intake
RFV160L	3-Position Intake (Low Pressure)
VRP66	3/4" Barb x 1/2" Male NPT Straight Fitting
VRP79	3/4" ID Yellow Hose - Per Foot
PMHC3/4	3/4" Hose Clamp (2 req'd)
VRP67S	3/4" Barb x 3/4" Female NPT
VT101	PVC Tee
PMTT6	7.5" Black Wire Tie

VR-203
V-MAX REGULATOR

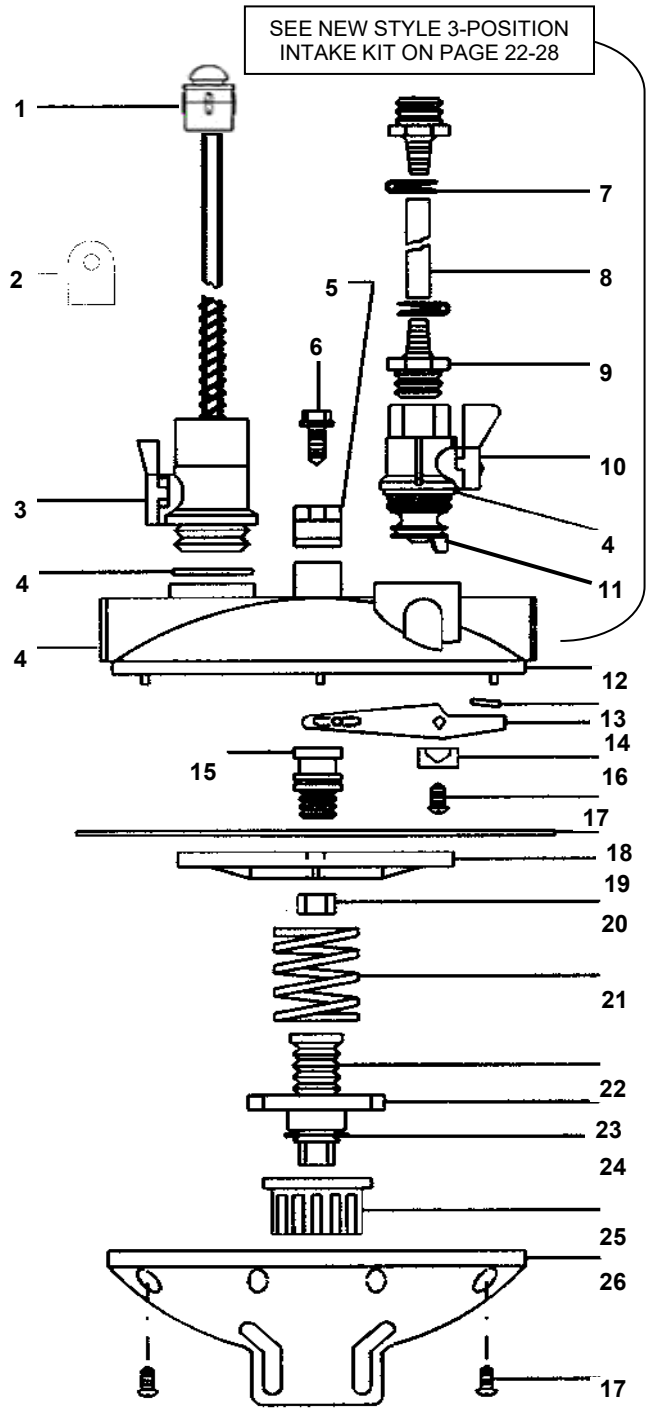

KEY	PART #	DESCRIPTION
1	820295	TruSeal Cap for Flex Standpipe
2	VRP42	(2) Mounting Brackets for Aluminum Extrusion
3		Standpipe - See page 22-05
4	VO145	O-Ring for 3/4" Couplings
5	VRP06	Pipe Clamp
6	VRP05-1	Screws for Pipe Clamp & Filter Bracket
7	VF204C	Hose Clamp for 3/8" Urethane
8	VRP48	PVC Yellow Reinforced Hose 3/8" 200 PSI (Drop Hose)
9	VRP45	1/2" Threaded Male Hose Connector (3/8" Barb)
10	VRP09	1/2" NPT Intake with Shutoff
	VRP09L	1/2" NPT Low Press Intake with S/O
11	VRP119	O-Ring for Bottom of RVH114
12	VRP23	Top Housing
13	VRP36G	Rubber Wafer Placement
14	VRP12G	Pivot - New Style
15	VRP15	Diaphragm Bolt
16	VRP13	Pivot Brackets (Multiples of 2)
17	VRP14	Screw - 2 for Pivot Bracket or 9 for Bottom Housing
18	VRP16	Diaphragm
19	VRP52	Diaphragm Plate
20	VRP18	Diaphragm Nut
21	VRP19	Spring
22	VRP20	Adjustment Bolt
23	VRP25	Adjustment Collar
24	VRP21	Adjustment Bolt Pin
25	VRP24	Adjustment Knob
26	VRP22	Bottom Housing

VR-204
V-MAX REGULATOR

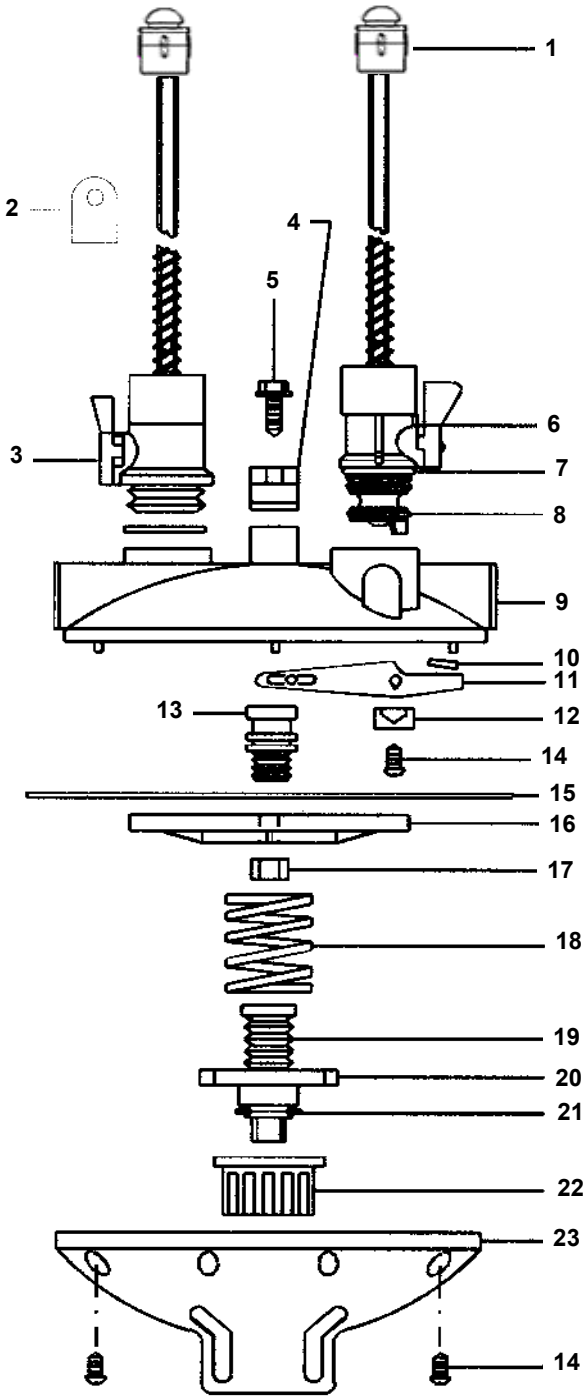

KEY	PART #	DESCRIPTION
1	820295	TruSeal Cap for Flex Standpipe
2	VRP42	(2) Mounting Brackets for Aluminum Extrusion
3		Standpipe - See page 22-05
4	VRP06	Pipe Clamp
5	VRP05-1	Screws for Pipe Clamp & Filter Bracket
6		Standpipe - See page 22-05
7	VO145	O-Ring for 3/4" Couplings
8	VRP31	O-Ring Seal
9	VRP32	Top Housing
10	VRP36G	Rubber Wafer Replacement
11	VRP12G	Pivot
12	VRP13	Pivot Brackets (Multiples of 2)
13	VRP15	Diaphragm Bolt
14	VRP14	Screw - 2 for Pivot Bracket or 9 for Bottom Housing
15	VRP16	Diaphragm
16	VRP52	Diaphragm Plate
17	VRP18	Diaphragm Nut
18	VRP19	Spring
19	VRP20	Adjustment Bolt
20	VRP25	Adjustment Collar
21	VRP21	Adjustment Bolt Pin
22	VRP24	Adjustment Knob
23	VRP22	Bottom Housing

VR-205
V-MAX REGULATOR

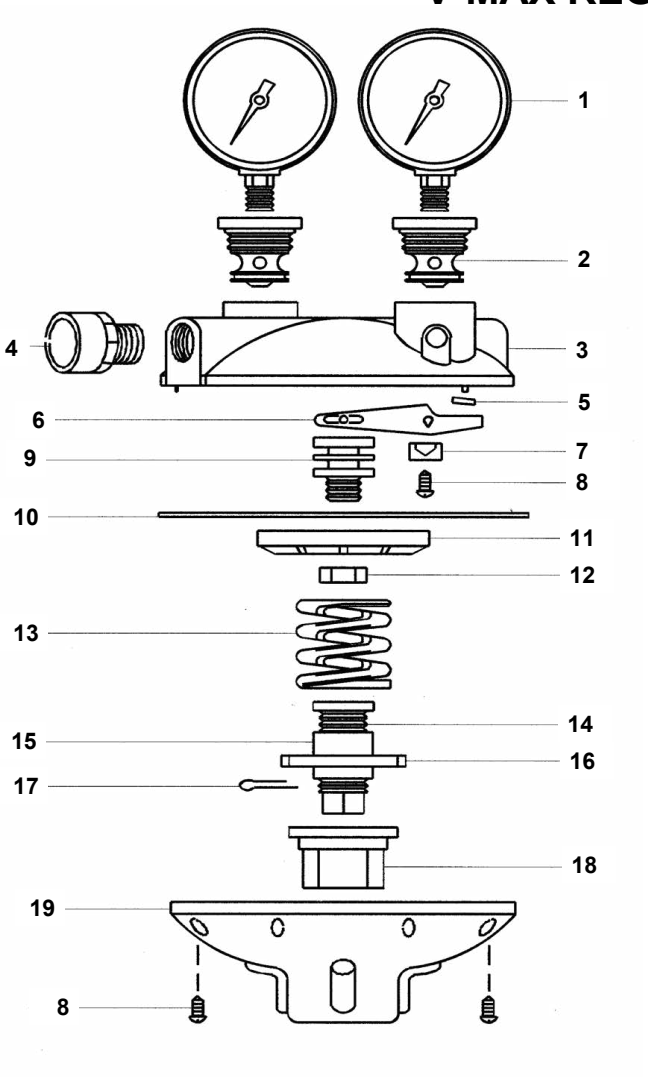

KEY	PART #	
1	VG100	Oil Filled Pressure Gauge (0-100 PSI)
2	VRP57	Gauge Intake
3	VRP58	Top Housing
4	VT131	3/4" PVC Male Adapter SX thread
5	VRP36G	Rubber Wafer Replacement
6	VRP12G	Pivot - New Style
7	VRP13	Pivot Brackets
8	VRP14	Screw - 2 for Pivot Bracket or 9 for Bottom Housing
9	VRP15	Diaphragm Bolt
10	VRP51	Diaphragm
11	VRP52	Diaphragm Plate
12	VRP18	Diaphragm Nut
13	VRP53	Spring
14	VRP20	Adjustment Bolt Pin
15	VRP50	Diaphragm Spacer
	820224	Diaphragm 1/2 Spacer
16	VRP25	Adjustment Collar
17	VRP21	Adjustment Bolt Pin
18	VRP55	Adjustment Knob
19	VRP54	Bottom Housing

VR209 REGULATOR REPAIRS

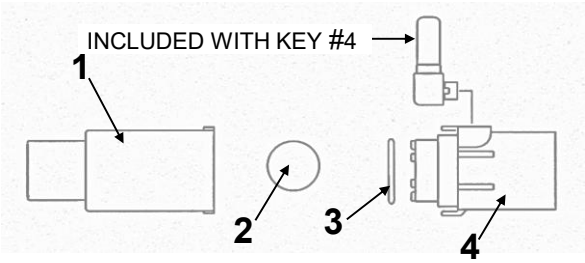

KEY	PART #	ITEM DESCRIPTION	List Price
1	VRP90	Left Housing with Stainless Steel Seat (SS Ball NOT Included) *Note: This part may be used in place of Left Housing & Plunger on* *Note: VR208 Regulator to convert to New Style VR209 Regulator.*	
2	VRP94	Stainless Steel Ball Only - 18mm 440CSS, Grade 25	
3	VO145	O-Ring for 3/4" Couplings	
4	VRP78	Right Housing with O-ring	

REGULATOR REPAIRS

NUMERICAL LIST OF REGULATOR REPAIRS

CATALOG #	ITEM DESCRIPTION	SHIP WEIGHT LBS.	SHIP WEIGHT KGS.	LIST PRICE
820295	Auto Shutoff Cap for Flex Standpipe	0.05	0.02	
820611	Auto Shutoff Cap for Rigid Standpipe	0.06	0.03	
820334	Auto Shutoff Cap Replacement Seal for Flex Standpipe	0.00	0.00	
820335	Auto Shutoff Cap Replacement Seal for Rigid Standpipe	0.00	0.00	
PMHC3/4	3/4" Hose Clamp (2 req'd)	0.04	0.01	
PMTT6	7.5" Wire Tie	0.00	0.01	
RFV150	Flushing Intake Housing	0.18	0.08	
RFV151	Flushing Intake Cap	0.05	0.02	
RFV152	Flushing Intake Handle	0.04	0.02	
RFV153L	Flushing Intake Shaft Low Pressure	0.12	0.05	
RFV153S	Flushing Intake Shaft High Pressure	0.12	0.05	
RFV154	(2) Large O-Ring for RFV153	0.00	0.00	
RFV155	(2) Small O-Ring for RFV153	0.00	0.00	
RFV160	3-Position Intake	0.43	0.20	
RFV160L	3-Position Intake (Low Pressure)	0.41	0.18	
VF204C	Hose Clamp for 3/8" Urethane	0.01	0.01	
VG100	Oil Filled Pressure Gauge (0-100 PSI)	0.50	0.23	
VO145	O-Ring for 3/4" Couplings	0.00	0.00	
VO145S	O-Ring for RFV150	0.00	0.00	
VR202RK	Rebuild Kit for VR 202	1.17	0.53	
VRP03	5/8" Blue Rigid Standpipe Ball	0.01	0.00	
VRP03F	5/16 Blue Flex Standpipe Ball	0.00	0.00	
VRP05-1	Screws for Pipe Clamp & Filter Bracket	0.01	0.00	
VRP06	Pipe Clamp	0.06	0.03	
VRP09	1/2" NPT Intake With Shutoff	0.13	0.06	
VRP09L	1/2" NPT Low Press Intake With S/O	0.09	0.04	
VRP11	Top Housing	0.50	0.23	
VRP119	O-Ring for Bottom of RVH114	0.00	0.00	
VRP12G	Pivot - New Style	0.03	0.01	
VRP13	Pivot Brackets (Multiples of 2)	0.00	0.00	
VRP14	Screw - 2 for Bracket or 9 for Bottom Housing	0.00	0.00	
VRP15	Diaphragm Bolt	0.02	0.01	
VRP16	Diaphragm	0.12	0.06	
VRP18	Diaphragm Nut	0.03	0.01	
VRP19	Spring	0.05	0.02	
VRP20	Adjustment Bolt Pin	0.03	0.01	
VRP21	Adjustment Bolt Pin	0.00	0.00	
VRP22	Bottom Housing	0.47	0.21	
VRP23	Top Housing	0.60	0.27	
VRP24	Adjustment Knob	0.07	0.03	
VRP25	Adjustment Collar	0.03	0.01	

LISTING CONTINUED ON NEXT PAGE

REGULATOR REPAIRS

NUMERICAL LIST OF REGULATOR REPAIRS

CATALOG #	ITEM DESCRIPTION	SHIP WEIGHT LBS.	SHIP WEIGHT KGS.	LIST PRICE
820334	Seal for VC075	0.00	0.00	
820335	Seal for VC025	0.00	0.00	
820581	Union, 3/4" NPT x 3/4" Socket PVC Fitting	0.16	0.07	
820587	Autoflush Half with Barb	0.67	0.30	
820588	Autoflush Half	0.57	0.26	
VRP30F	Intake With Shutoff (Flex)	0.12	0.05	
VRP31	O-Ring Seal - .867" ID	0.00	0.00	
VRP32	Top Housing	0.55	0.25	
VRP36G	Rubber Wafer Replacement	0.00	0.00	
VRP42	Set of 2 Mounting Brackets for Aluminum Extrusion	0.01	0.00	
VRP45	1/2" Threaded Male Hose Connector (3/8" Barb)	0.01	0.00	
VRP48	PVC Yellow Reinforced Hose 3/8" 200 PSI (Drop Hose)	0.08	0.04	
VRP50	Diaphragm Spacer	0.01	0.01	
VRP51	Diaphragm	0.15	0.07	
VRP52	Diaphragm Plate	0.09	0.04	
VRP53	Spring	0.31	0.14	
VRP54	Bottom Housing	0.45	0.20	
VRP55	Adjustment Knob	0.07	0.03	
VRP57	Gauge Intake	0.04	0.02	
VRP58	Top Housing	0.53	0.24	
VRP66	3/4" Barbed x 1/2" Male NPT Straight Fitting	0.04	0.02	
VRP67	3/4" Barbed Y Connector	0.06	0.03	
VRP67S	3/4" Barb x Female 3/4" NPT	0.05	0.02	
VRP68	3/4" Barbed Y Connector	0.05	0.02	
VRP76	3/4" Close Nipple Plastic	0.03	0.01	
VRP79	3/4" ID Yellow Hose - Per Foot	0.20	0.09	
VRP90	Left Housing With Stainless Steel Ball	0.11	0.05	
VRP94	Stainless Steel Ball Only - 18MM 440CSS, Grade 25	0.05	0.02	
VS130	Spring for 18" Flex Standpipe	0.17	0.07	
VS132	Spring for 24" Flex Standpipes	0.23	0.10	
VS133	Spring for 30" Flex Standpipes	0.28	0.13	
VS134	Spring for 36" Flex Standpipes	0.34	0.15	
VSC250	Body Only for VC025	0.00	0.00	
VSC251	Cap Only for VC025	0.00	0.00	
VSC750	Body Only for VC075	0.01	0.00	
VSC751	Cap Only for VC075	0.01	0.01	
VT131	3/4" PVC Male Adapter SX Thread	0.04	0.02	

FILTER KIT REPAIRS

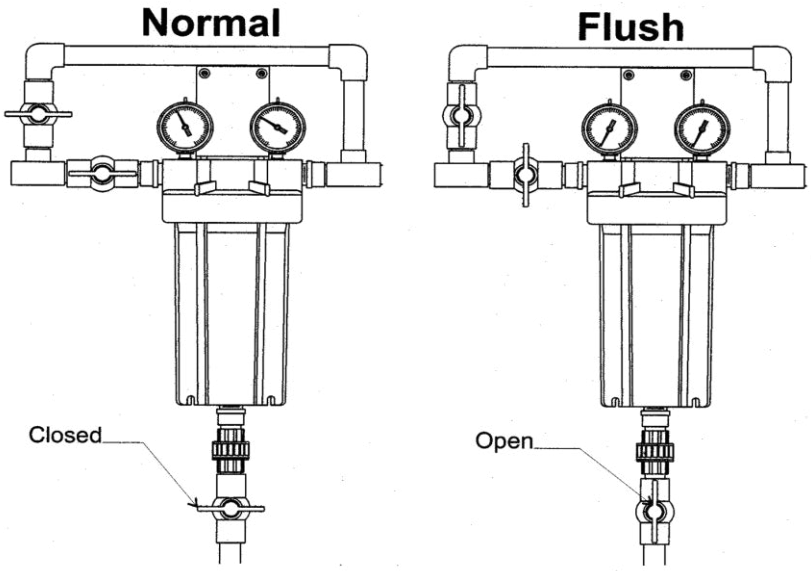

CATALOG NUMBER	ITEM DESCRIPTION	SHIP WEIGHT LBS.	SHIP WEIGHT KGS.	LIST PRICE
VF123	Bottom Housing for VF121 and VF122	2.33	1.06	
VF125	O-Ring for VF120 Filter Kit	0.02	0.01	
VF126	O-Ring for VF121 and VF122 Filter Kit	0.02	0.01	
VF128	Filter Bracket (Aluminum)	0.79	0.36	
VF129	Lid for Filter	1.90	0.86	
VG100	Oil Filled Pressure Gauge (0-100 PSI)	0.50	0.23	
VG100L	Oil Filled Pressure Gauge (0-15 PSI)	0.45	0.20	
VM121-10	Reusable Filter Cartridge for VF121/VF122 (10 Micron) - Blue Dot	1.91	0.87	
VM121-30	Reusable Filter Cartridge for VF121/VF122 (30 Micron) - Black Dot	1.51	0.69	
VM121-50	Reusable Filter Cartridge for VF121/VF122 (50 Micron) - Red Dot	1.62	0.73	
VT131	3/4" PVC Male Adapter S X Thread	0.04	0.02	
VT141	1" PVC Male Adapter 1" Thread X 3/4" S	0.01	0.00	
VX127	3/4" Union S X S	0.16	0.07	

Turkey Drinker Repair Parts

CATALOG #	ITEM DESCRIPTION	LBS.	KG.	LIST PRICE
VT185L-FB	Big Tom Starter Float Ball	0.02	0.01	
VT150XLP	Turkey Drinker - With Long Pin for Big Tom	0.02	0.01	
VBT185L	Big Tom Cup & Drinker Kit (Universal Saddle Only)	0.52	0.23	
VT186	Pin Stop	0.03	0.01	

Toll-free: 1-800-99VALCO
Phone: (+1) 419-678-8731
Fax: (+1) 419-678-2200

SECTION 23
CAGE WATERING INFORMATION

IN THIS CATALOG SECTION

VAL WATERING SYSTEMS - CAGE WATERING
Installation Guide, Parts List, Operation Guide
and Maintenance Instructions

PAGE NUMBER	CONTENTS
	PLANNING
23-03	Check List
	INSTALLATION INSTRUCTIONS & PARTS IDENTIFICATION
23-04	House Header Kit
23-05	Alternate Filter Setup
23-06	Back Flush Filter & High Pressure Regulator
23-07	Medicator
23-08	Saddles
23-09	Nipples
23-10	Cage Header Kit
23-11	Stacked Cage Header Kit
23-12	Cage Pipe Installation
23-13	Regulator
23-14	Replacement Cap Kits
23-15	Slope Regulators
23-16	Air Release
23-17	End Assembly
23-18	Flush Kit
23-19	Stacked Cage Flush Kit
23-20	Lead-In Kits & Chiller Hookup
	STARTGROW INSTALLATION
23-22	Cage Bracket
23-23	Startgrow
23-24	Extended Startgrow
23-25	Automatic Winching (Top)
23-26	Automatic Winching (Bottom)
	OPERATION & MANAGEMENT
23-28	Layer Management Procedures
23-29	Layer Nipples & V-Max Regulator Management
23-30	Cleaning Water Lines
23-31	Vaccination Procedure & Flushing Procedure
23-32	Important Water Facts
23-33	Chemical Resistance

INSTALLATION INSTRUCTIONS & PARTS IDENTIFICATION

Toll-free: 1-800-99VALCO
Phone: (+1) 419-678-8731
Fax: (+1) 419-678-2200

PLANNING

Checklist

Tools you will need to install your Val system:

- Hammer
- Screwdriver
- Crimping Tool
- Cable Cutters (VC300)
- Saw
- PVC Glue (VG125)
- Teflon Tape
- Pliers
- Measuring Tape
- PVC Pipe Cutter (VC100)

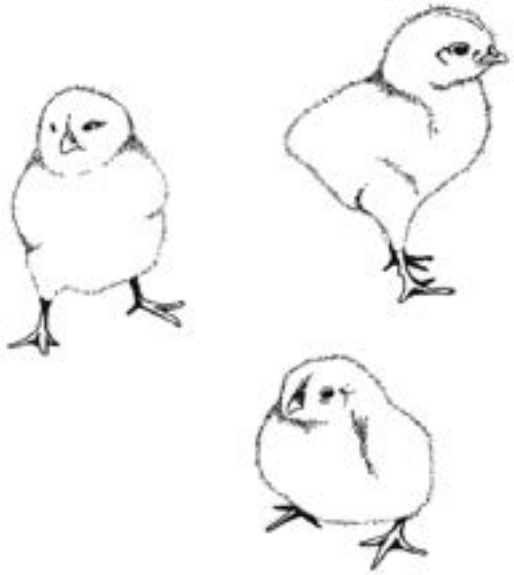

Toll-free: 1-800-99VALCO
Phone: (+1) 419-678-8731
Fax: (+1) 419-678-2200

Review all instructions before starting installation procedures and gather all tools required first.

See page 21 for a drawing of the lead-in kit. (VL100 + VL200).

See next page for an alternate setup for filters.

House Header Kit

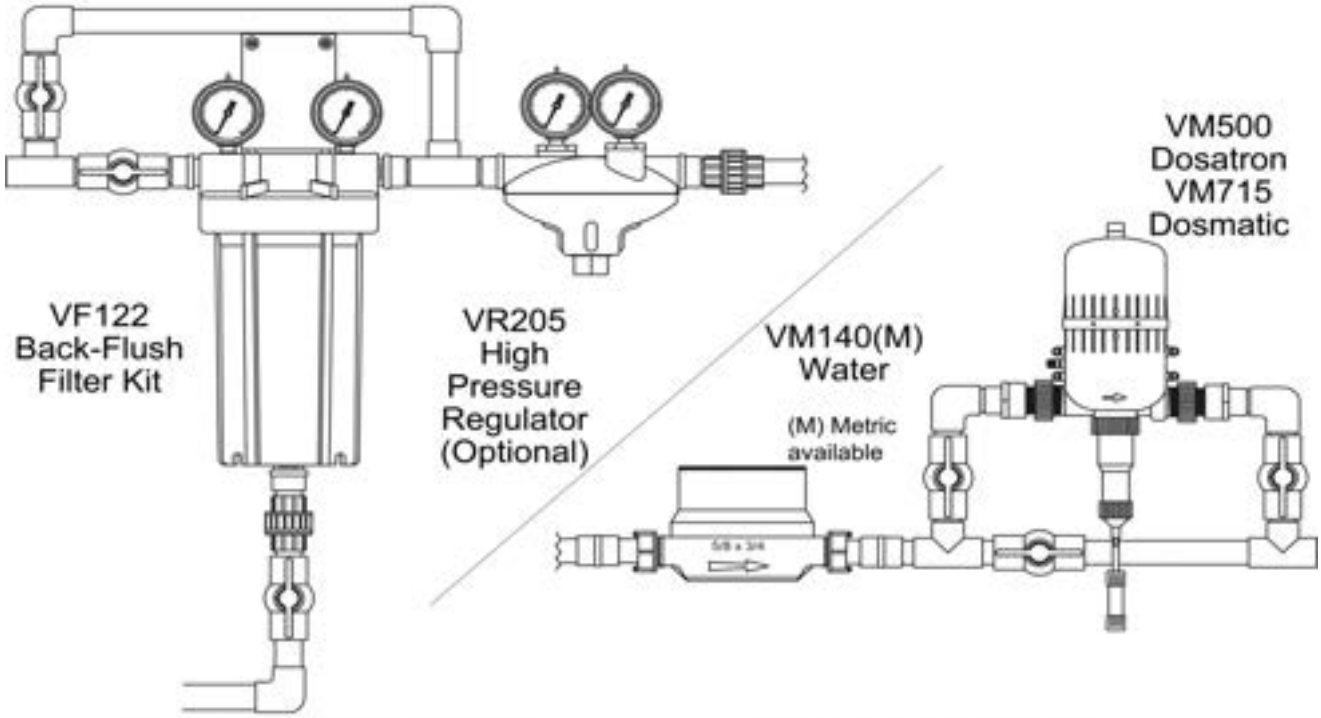

Backflush Filter Installation

1.Attach mounting bracket (VF126) to cap (VF129) with lag screws (VF127).

2.Apply 4 or 5 turns of thread sealing tape to male pipe threads of each fitting.

3.Assemble all fittings as tight as possible by hand to ensure proper fit. Tighten with wrench no more than one turn to snug fit. **DO NOT OVERTIGHTEN.**

4.Cut pipe to length and glue ends into place.

5.Assemble all parts. Check for water leaks. Rewrap any threads that are leaking with more turns of Teflon tape.

6.**CAUTION:** If water pipes are used for grounding electrical systems, be sure to install a jumper wire across filter.

Regulator Installation

1.Wrap 4 or 5 turns of thread seal tape around each 3/4" male adapter and screw 1 each into INLET and OUTLET of regulator (VR205). **CAUTION:** Do not overtighten as you could crack regulator top housing.

2.When using in regulator kits VR205-1 and VR205 wrap 4 or 5 turns on thread seal tape around 1/4" NPT plugs (VRP59) and tighten with wrench.

3.Wrap 4 or 5 turns of thread seal tape around gauge(s) and hand tighten into top of regulator.

4.Install in line after the filter system and before any medicator or water treatment system.

5.To maintain even pressure in all low pressure lines in poultry house, always set high pressure regulator lower or at least as low as lowest pump pressure setting. Do not set regulator below 25 PSI.

Toll-free: 1-800-99VALCO
Phone: (+1) 419-678-8731
Fax: (+1) 419-678-2200

Alternate Filter Setup

This setup will allow you to flush any filter and still provide water to all cage rows. You will also be flushing with filtered water.

Meters and medicators can be installed for each row.

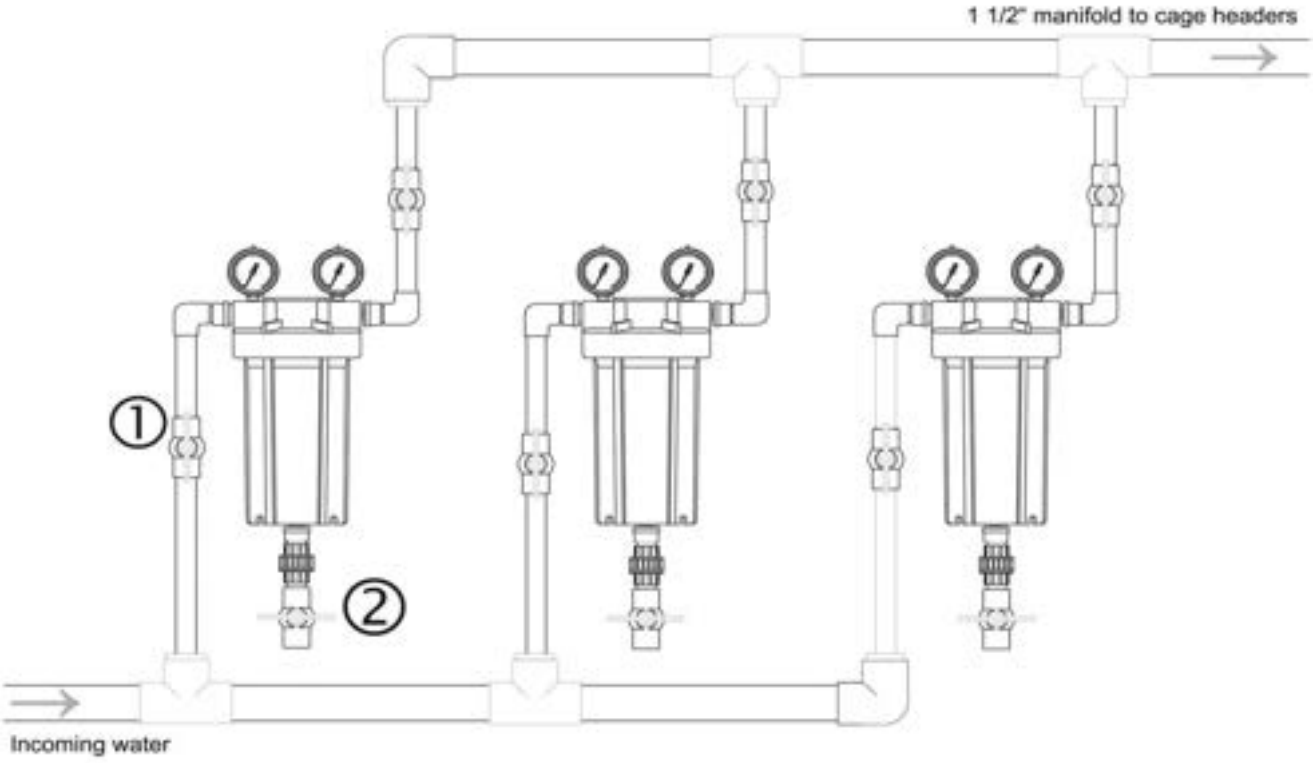

To flush, close ballvalve ① and open ballvalve ②.

(For maximum effectiveness, flush one filter at a time.)

One filter (VF122) will supply up to 50,000 birds.

One low pressure filter (VF122L) will supply up to 30,000 birds.

Back Flush Filter

VF122(L)

Use wrench to lightly tighten gauge [DO NOT OVERTIGHTEN].

Don't forget to flush your filter whenever you read 10 PSI difference between the two gauges or at regular intervals *(For low pressure systems [below 10 PSI] use a 50 micron filter and flush when there is a 1 PSI difference).*

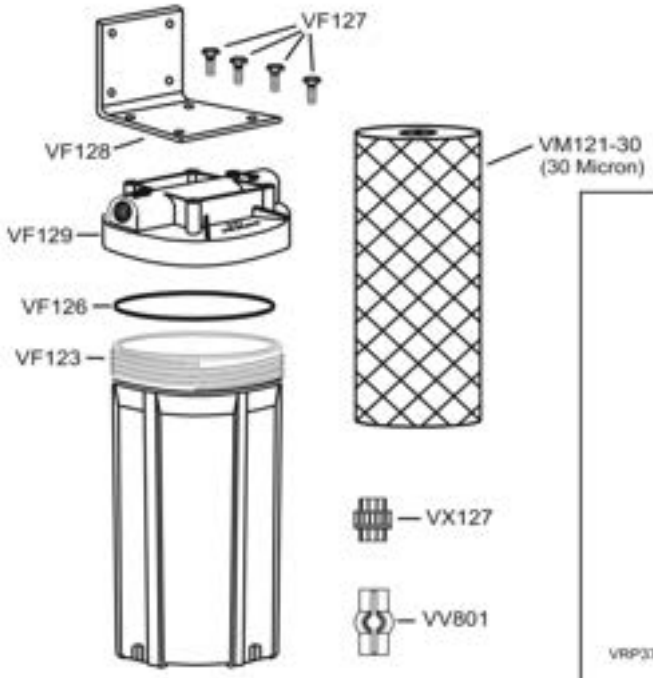

High Pressure Regulator

VR205

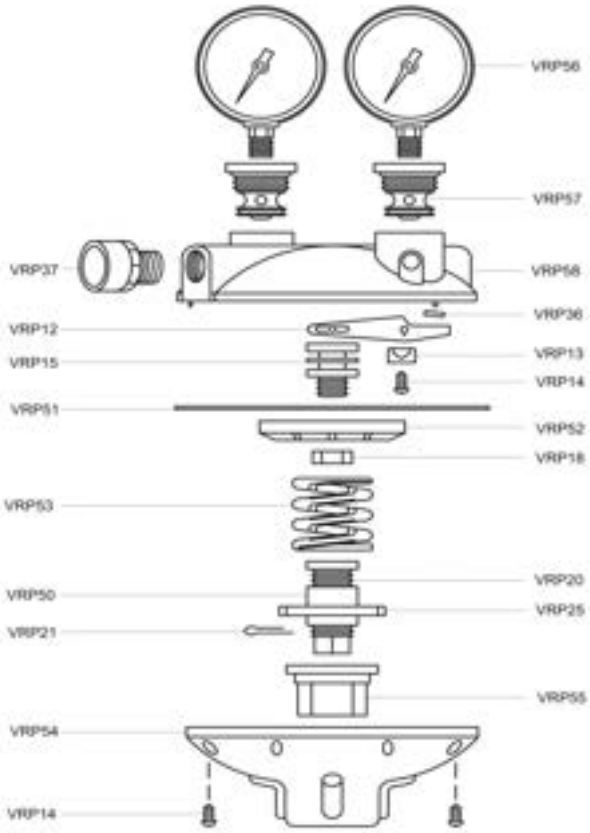

The high pressure regulator should be used when incoming water fluctuates more than 20 PSI (1.7 Bar). Set the outlet pressure at least as low as the lowest pump pressure setting, which will maintain an even outlet pressure. Do not set regulator pressure below 25 PSI.

Medicator

Tips

- Hard water will crystallize when coming into contact with chlorine and may cause excessive wear on mechanical parts.

Please refer to your medicator manual for detailed instructions on maintenance, operation and troubleshooting.
See page 33 for medicating procedures.
See page 26 for line cleaning procedures.

Tank or Gravity Feed

The minimum height requirement is from the water level in the tank down to the middle of the nipple line. **NOTE:** The water line must be full of water for the proper pressure to be created. Any air between the tank and the nipple line will decrease the effectiveness of the medicator.

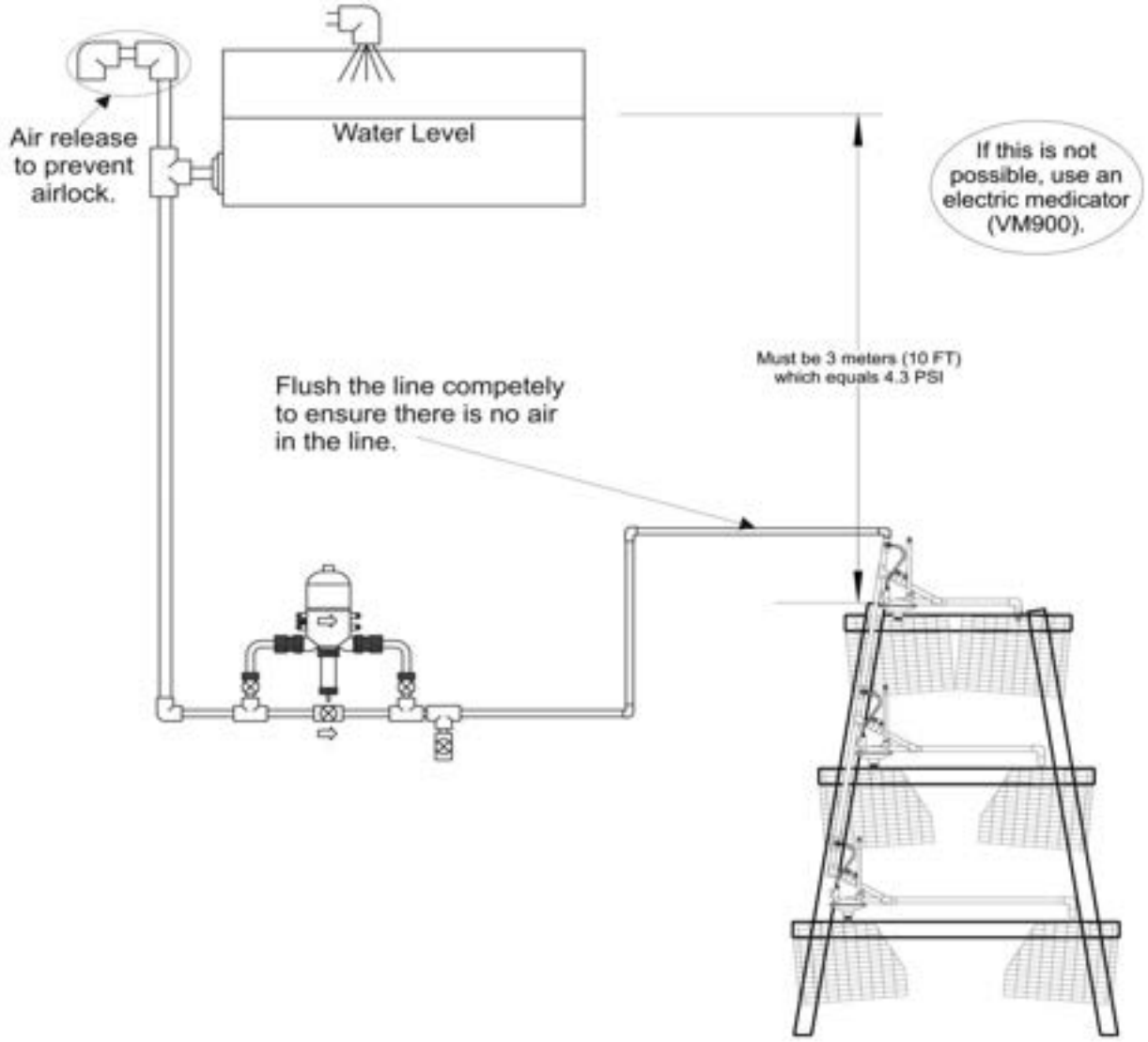

Toll-free: 1-800-99VALCO
Phone: (+1) 419-678-8731
Fax: (+1) 419-678-2200

Saddles

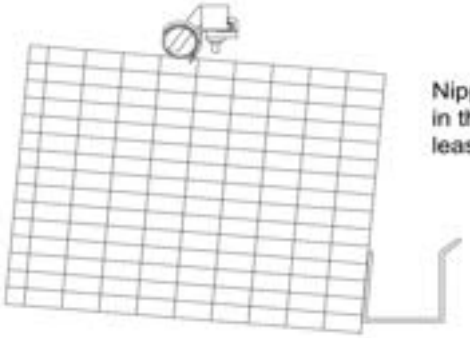

Nipple should be approximately in the middle of the cage, but at least 4 inches from feed.

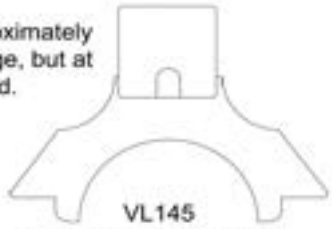

VL145
45° saddle without shield

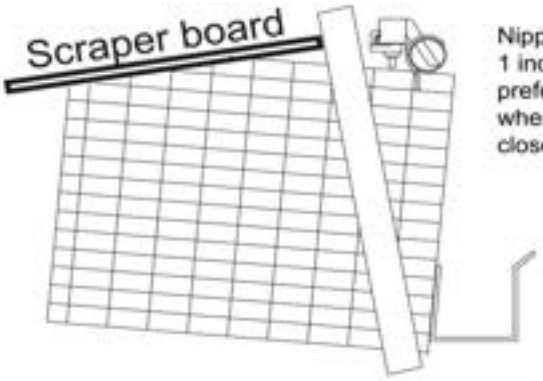

Nipple should be at least 1 inch from feed, but preferably more. Use only when the drinker must be close to the feed trough.

VL155
45° saddle with shield

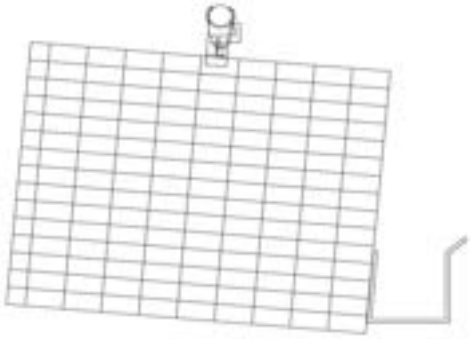

Standard cage saddle (VS146) with plastic pipe support bracket (VS143).

Standard cage saddle (VS146) with cage clip (VC147).

See page 12 for more information on installing water pipe.

Toll-free: 1-800-99VALCO
Phone: (+1) 419-678-8731
Fax: (+1) 419-678-2200

Nipples

Layer Nipple VL150

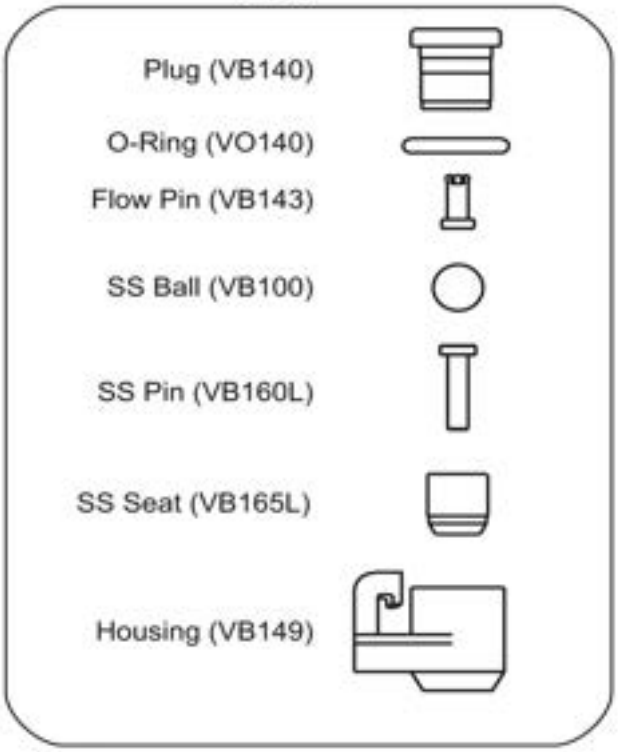

Roaster Nipple VR150

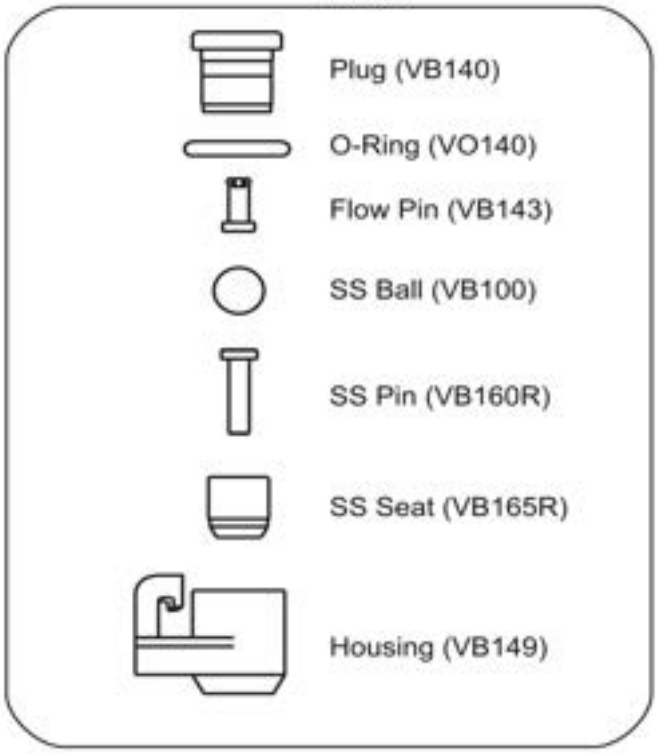

Threaded Nipple VL150THD

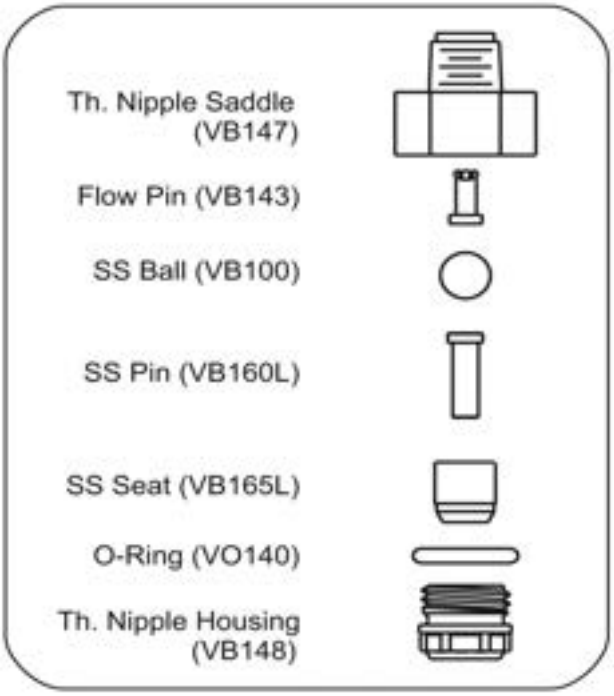

Threaded Nipple VR150THD

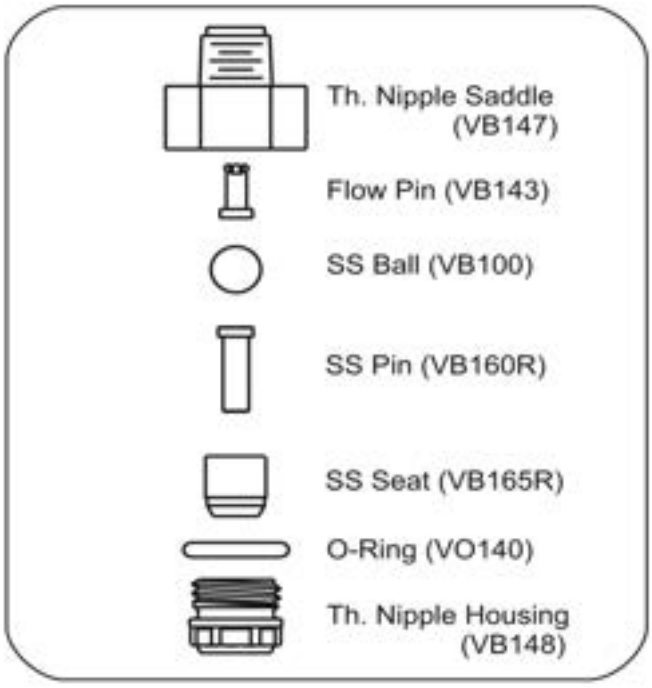

Toll-free: 1-800-99VALCO
Phone: (+1) 419-678-8731
Fax: (+1) 419-678-2200

Cage Header Kit

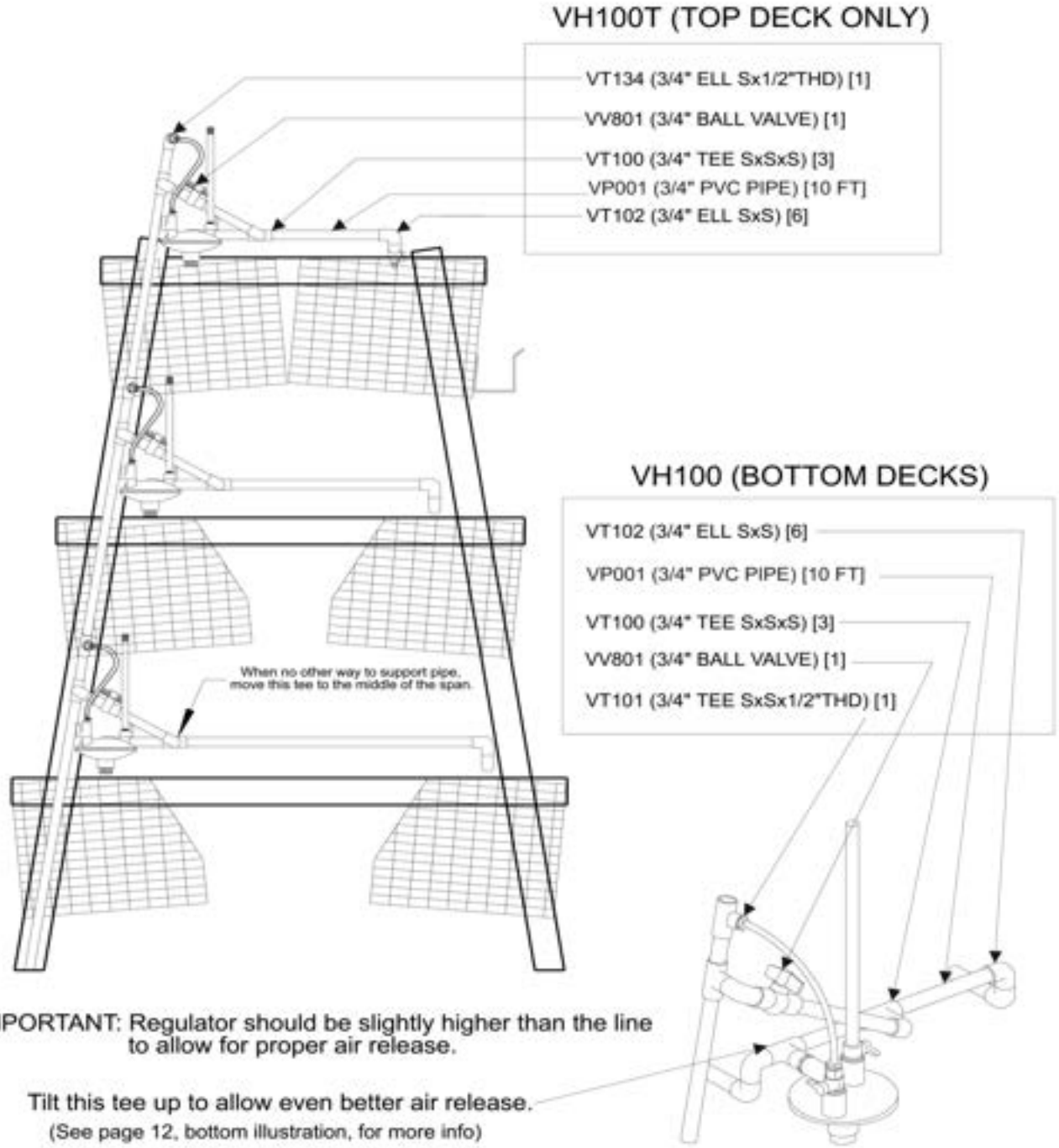

IMPORTANT: Regulator should be slightly higher than the line to allow for proper air release.

Tilt this tee up to allow even better air release.

(See page 12, bottom illustration, for more info)

Toll-free: 1-800-99VALCO
Phone: (+1) 419-678-8731
Fax: (+1) 419-678-2200

Stacked Cage Header Kit

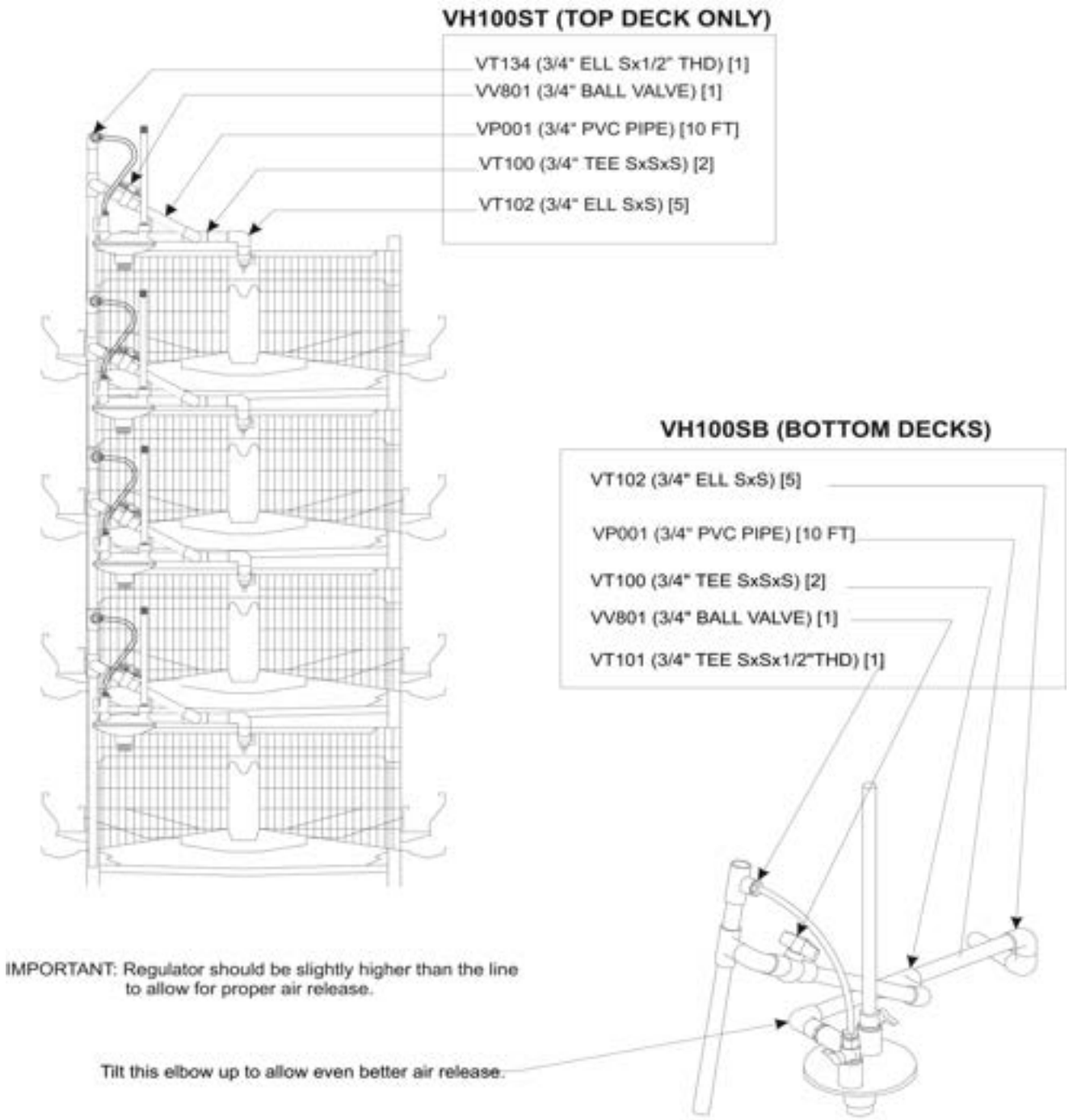

Cage Pipe Installation

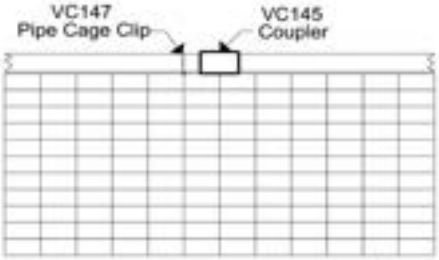

Use this cage clip (VC147), when installing the pipe directly on the top. This method would be used with the two 45° saddles and the standard saddle (when the standard saddle is used inside the cage). Keep clip within 1" of connector (VC145).

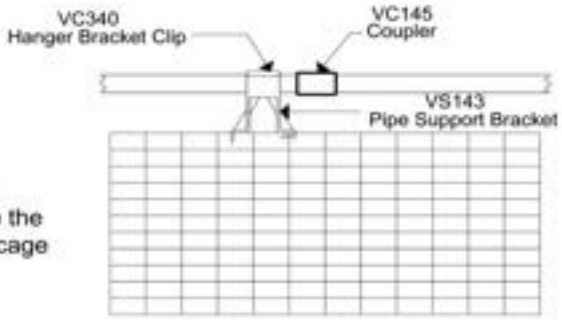

When you want to use standard saddles above the cage, install the plastic cage pipe support.

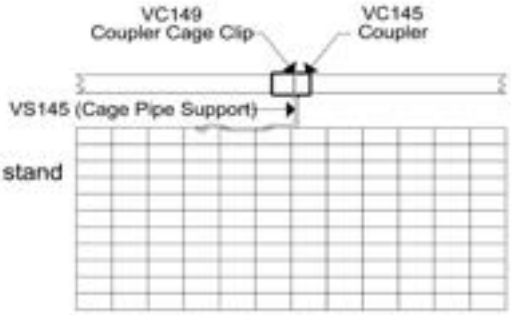

This is the wire cage stand setup.

Important!

Always install pipe so that the coupler (VC145) is in the middle of the leg stands in **all** cage systems. This helps to even out any high spots in the water line.

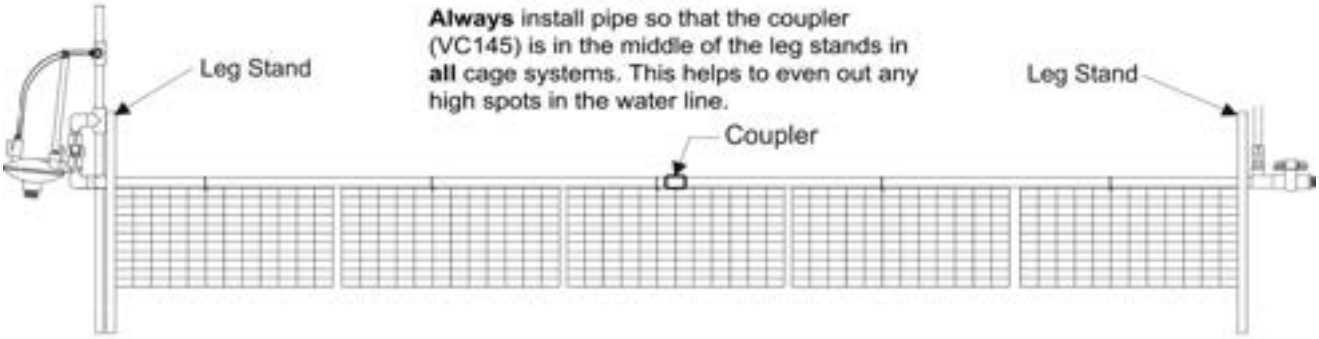

Toll-free: 1-800-99VALCO
Phone: (+1) 419-678-8731
Fax: (+1) 419-678-2200

Regulator

1. Screw standpipe assembly into the OUTLET side of regulator.

2. Screw hose connector into 1/2" NPT pipe fitting in the supply pipe (Do not overtighten). **NOTE:** Wrap with 3-4 turns of Teflon tape first.

3. Push hose onto hose barb at the water source. **NOTE:** Don't forget to add the hose clamp (VRP40C) first.

4. Push other end of hose onto the barbed end of drop hose intake with shutoff.

5. Use Teflon tape on the 3/4" adapter (VRP37) and thread into regulator (Do not overtighten). Glue the adapter into the PVC tee.

6. Standpipe plugs (VRP01) should be used when standpipes are removed to keep dirt out of regulator.

Val regulator will supply a maximum length of 700 FT (213 M) of Val Watering Cage System with 2 rows.

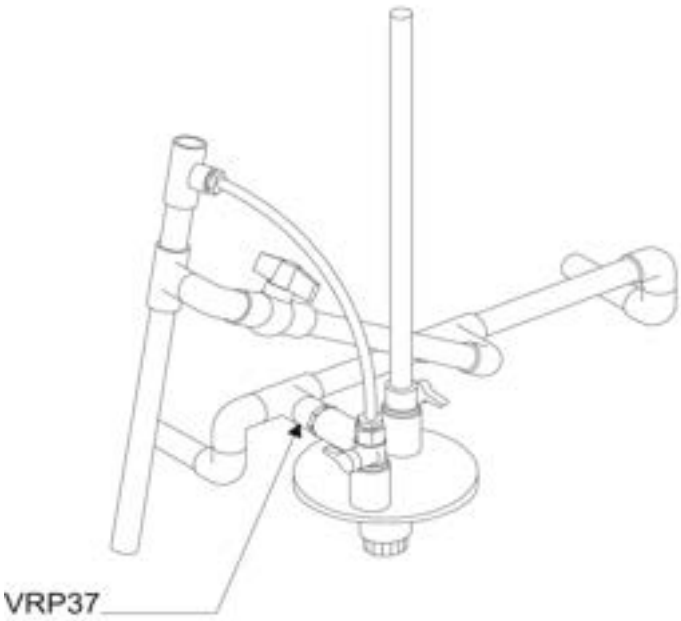

VR201

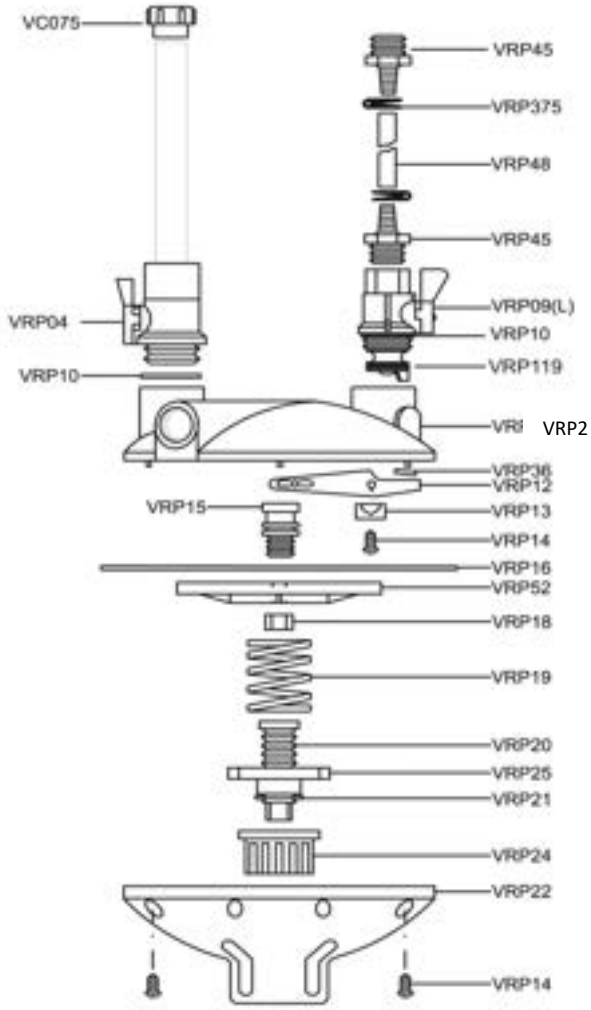

Replacement Caps Kits

When you're getting too much water out of the nipples with the standpipes at their lowest setting, it is probably time to replace the caps. Send a sample (3-5 nipples) to your distributor or directly to Val with your name, address, date of installation and any other helpful information.

When replacing with green caps, remember that the green cap returns the nipple to nearly the same flow that it had when it was new. That means that you need to raise standpipe pressures back to what they were when they were new.

Green Replacement Kit VB142

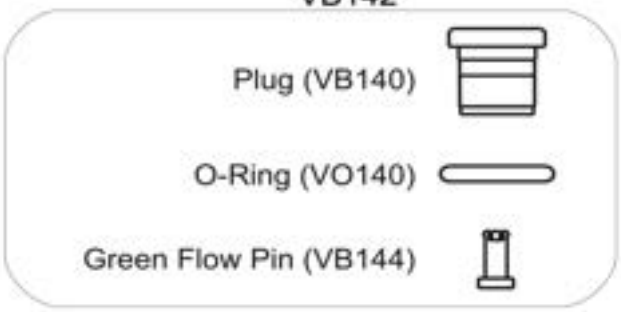

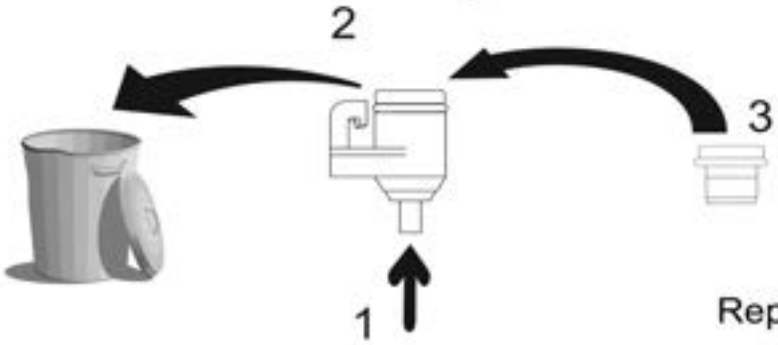

Replacing Caps

1. Push up on the stainless steel pin to loosen the old plug.
2. Pull out old plug and throw away. If the inside is dirty, clean.
3. Push in replacement plug. If necessary, tap on plug lightly.

CAUTION! Do not mix the SS balls and SS pins from all the nipples together.This may cause nipples to leak.

Standpipe Caps

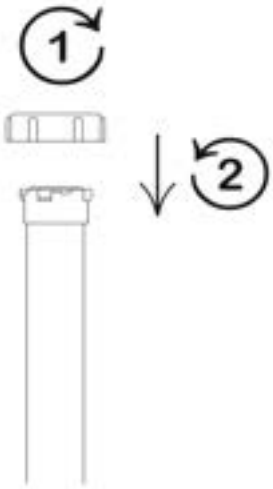

1. Turn the cap clockwise to lock.

2. Turn counterclockwise, while pushing down, to unlock for cleaning.

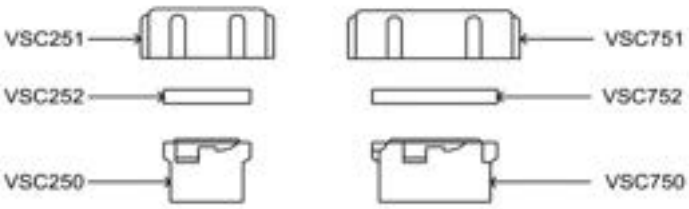

New standpipe caps that won't leak while flushing and are easily removable for cleaning. Just twist off to clean.

Slope Regulators

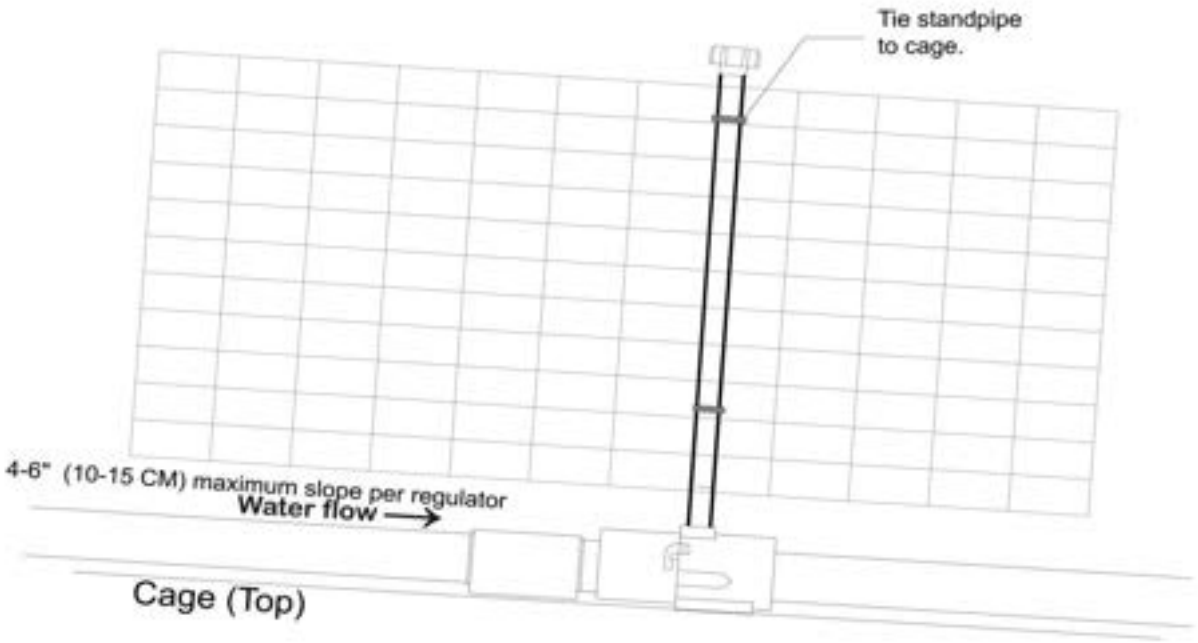

VR211

Water must run downhill. Cannot regulate water running uphill.

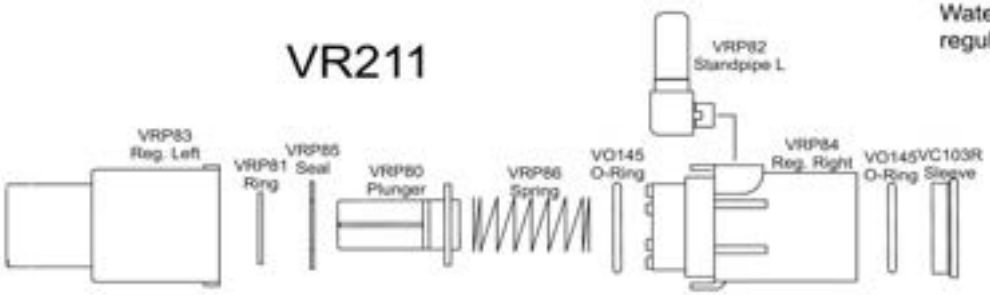

For every 3 VR211s add 1 VR204.

VR204

Water must run downhill. Cannot regulate water running uphill.

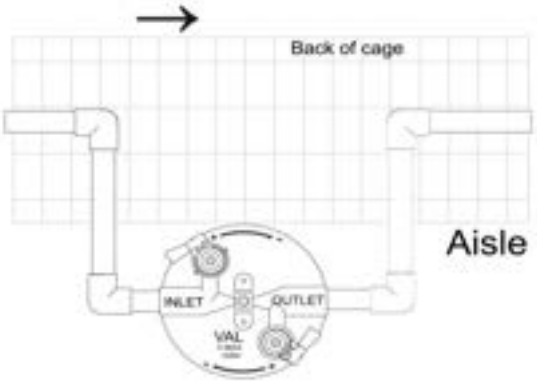

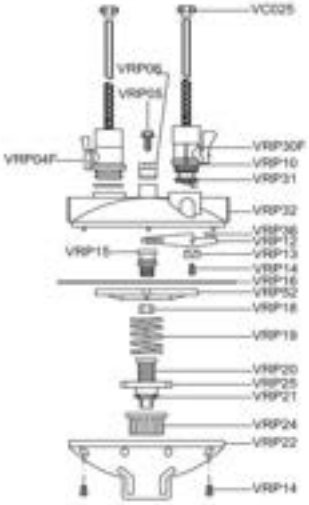

Air Release

VA805 (-24 or -30)

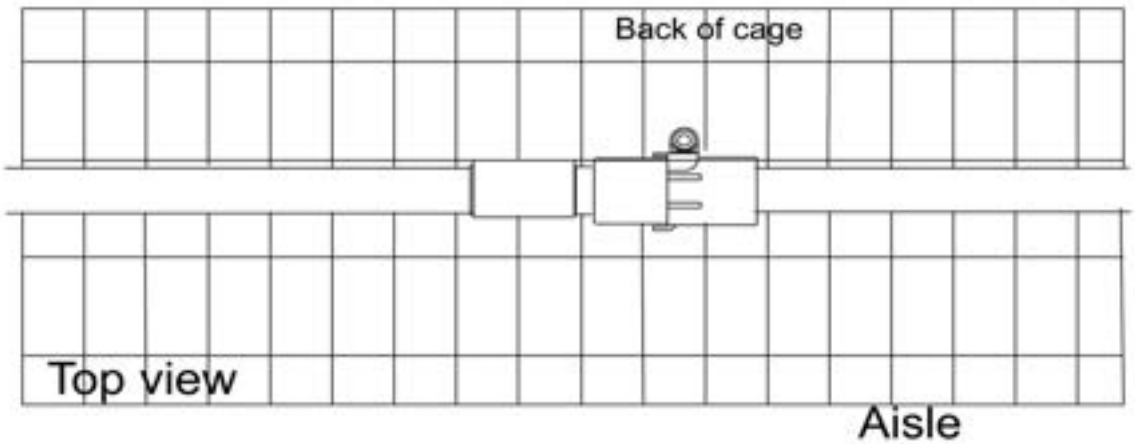

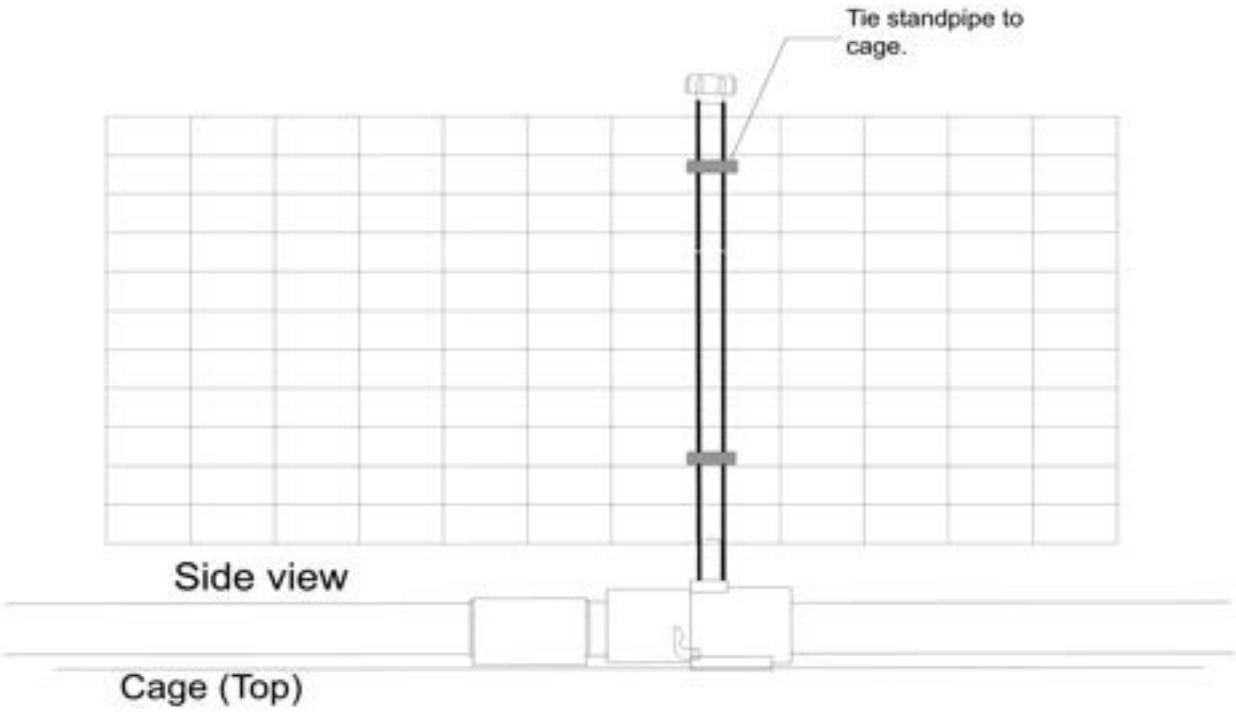

End Assembly

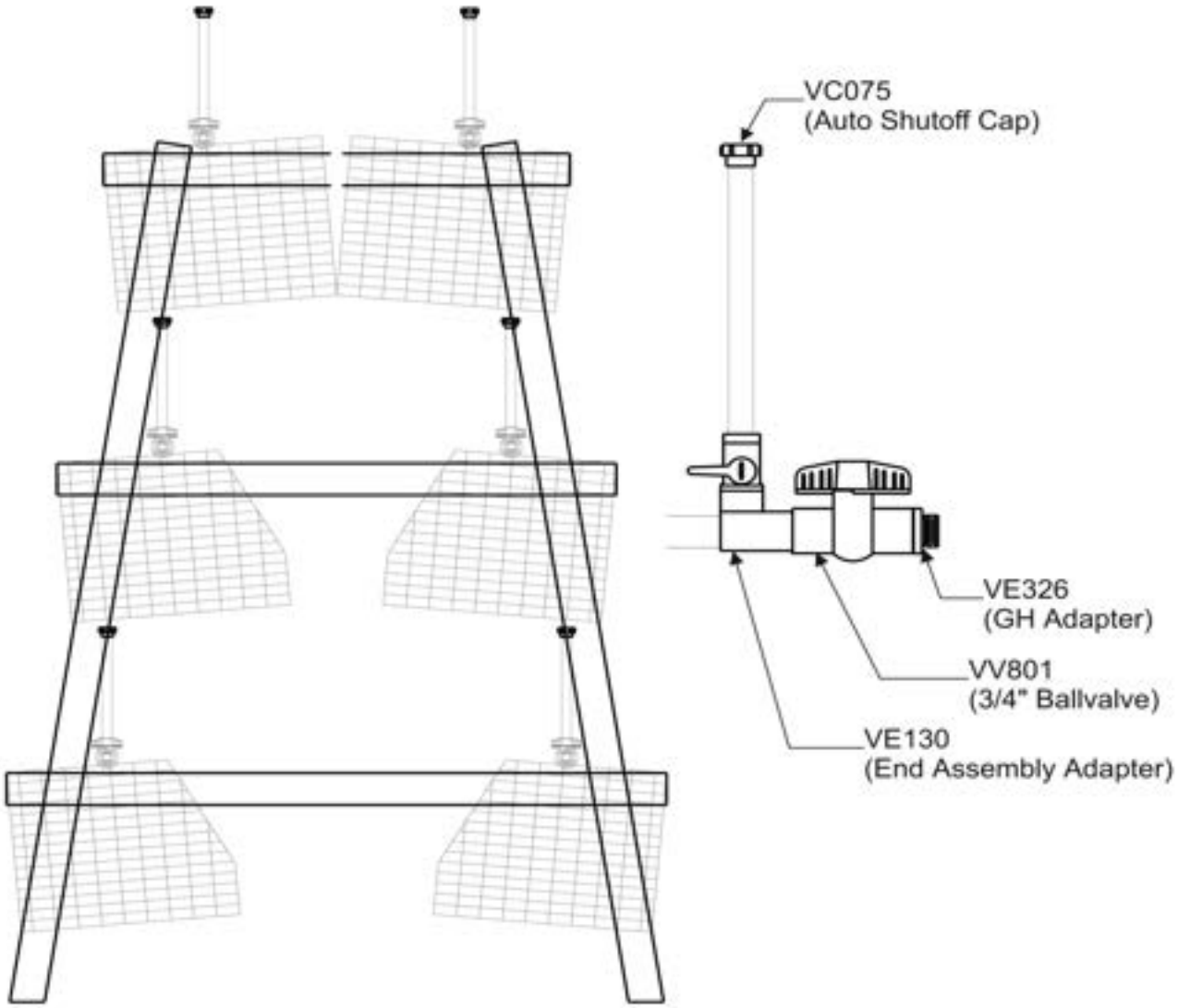

Flush Kit

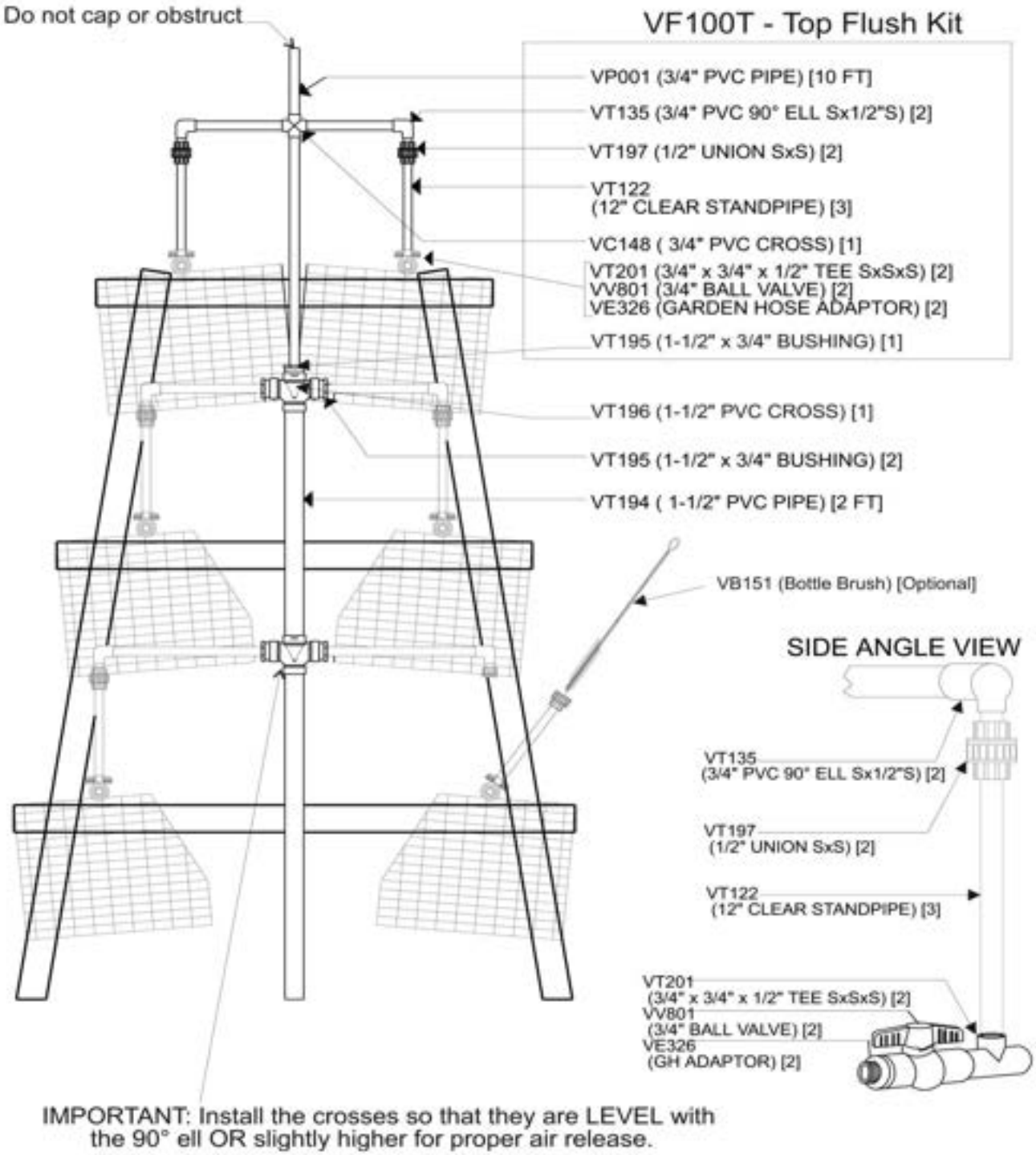
Do not cap or obstruct
VF100T - Top Flush Kit
VP001 (3/4" PVC PIPE) [10 FT]
VT135 (3/4" PVC 90° ELL Sx1/2"S) [2]
VT197 (1/2" UNION SxS) [2]
VT122
(12" CLEAR STANDPIPE) [3]
VC148 (3/4" PVC CROSS) [1]
VT201 (3/4" x 3/4" x 1/2" TEE SxSxS) [2]
VV801 (3/4" BALL VALVE) [2]
VE326 (GARDEN HOSE ADAPTOR) [2]
VT195 (1-1/2" x 3/4" BUSHING) [1]
VT196 (1-1/2" PVC CROSS) [1]
VT195 (1-1/2" x 3/4" BUSHING) [2]
VT194 (1-1/2" PVC PIPE) [2 FT]
VB151 (Bottle Brush) [Optional]
SIDE ANGLE VIEW
VT135
(3/4" PVC 90° ELL Sx1/2"S) [2]
VT197
(1/2" UNION SxS) [2]
VT122
(12" CLEAR STANDPIPE) [3]
VT201
(3/4" x 3/4" x 1/2" TEE SxSxS) [2]
VV801
(3/4" BALL VALVE) [2]
VE326
(GH ADAPTOR) [2]
IMPORTANT: Install the crosses so that they are LEVEL with
the 90° ell OR slightly higher for proper air release.

Stacked Cage Flush

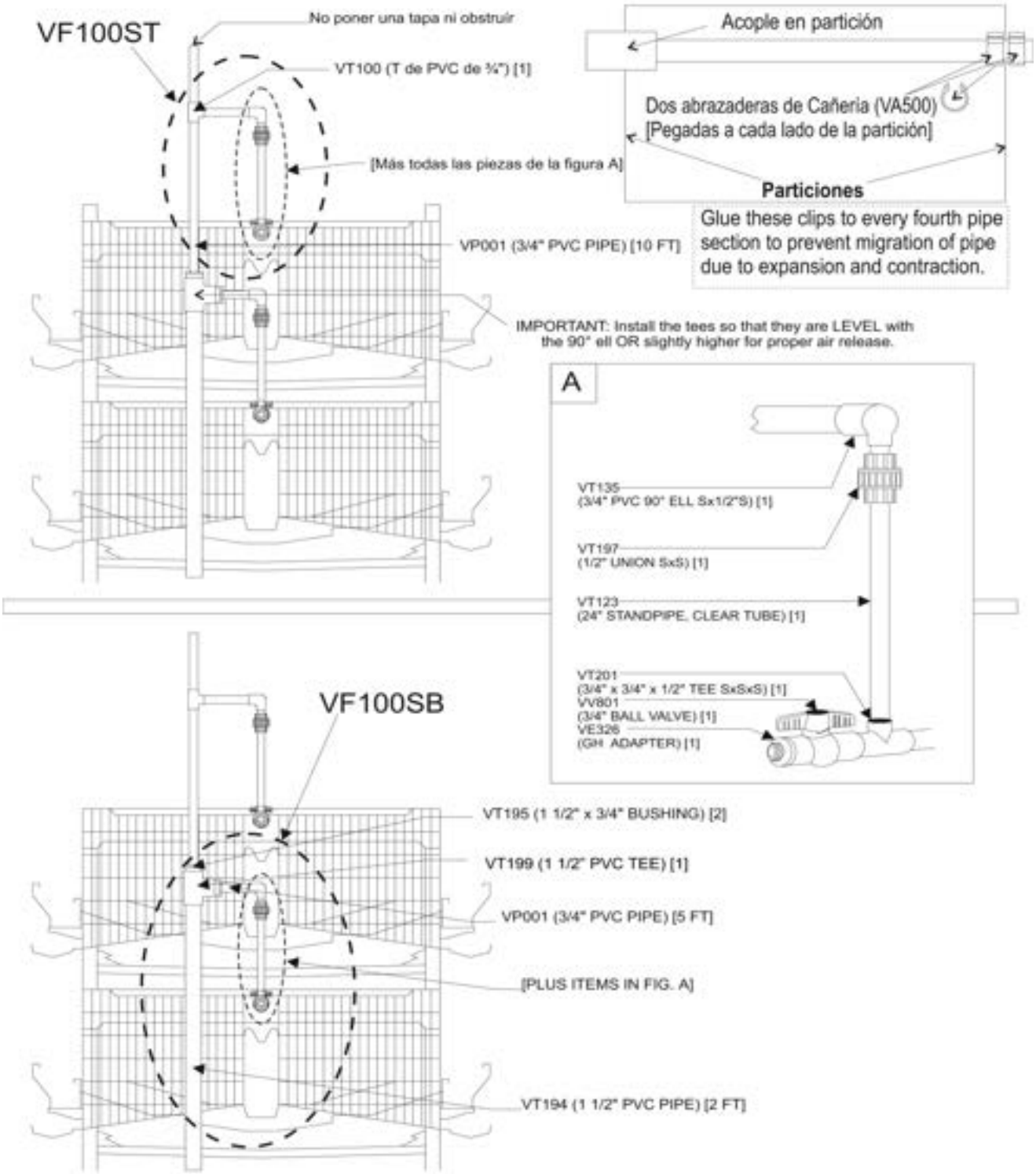

Lead-In Kits and Chiller Hookup

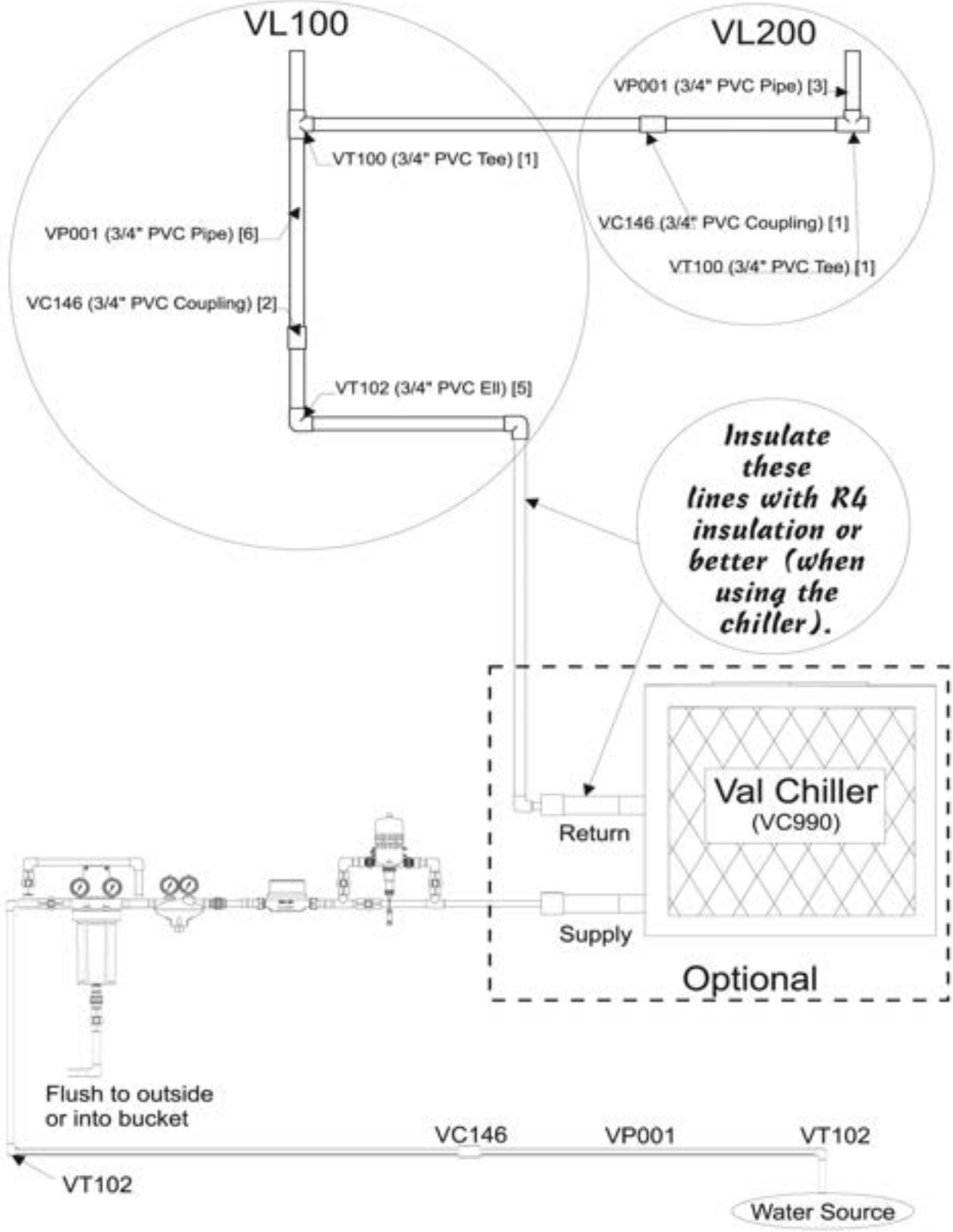

STARTGROW INSTALLATION

Toll-free: 1-800-99VALCO
Phone: (+1) 419-678-8731
Fax: (+1) 419-678-2200

Cage Bracket

The barbed saddle (VS147) is used on all applications that use green PVC hose (BG222).

The cage bracket (VB130) is one way to move the nipple anywhere in the cage.

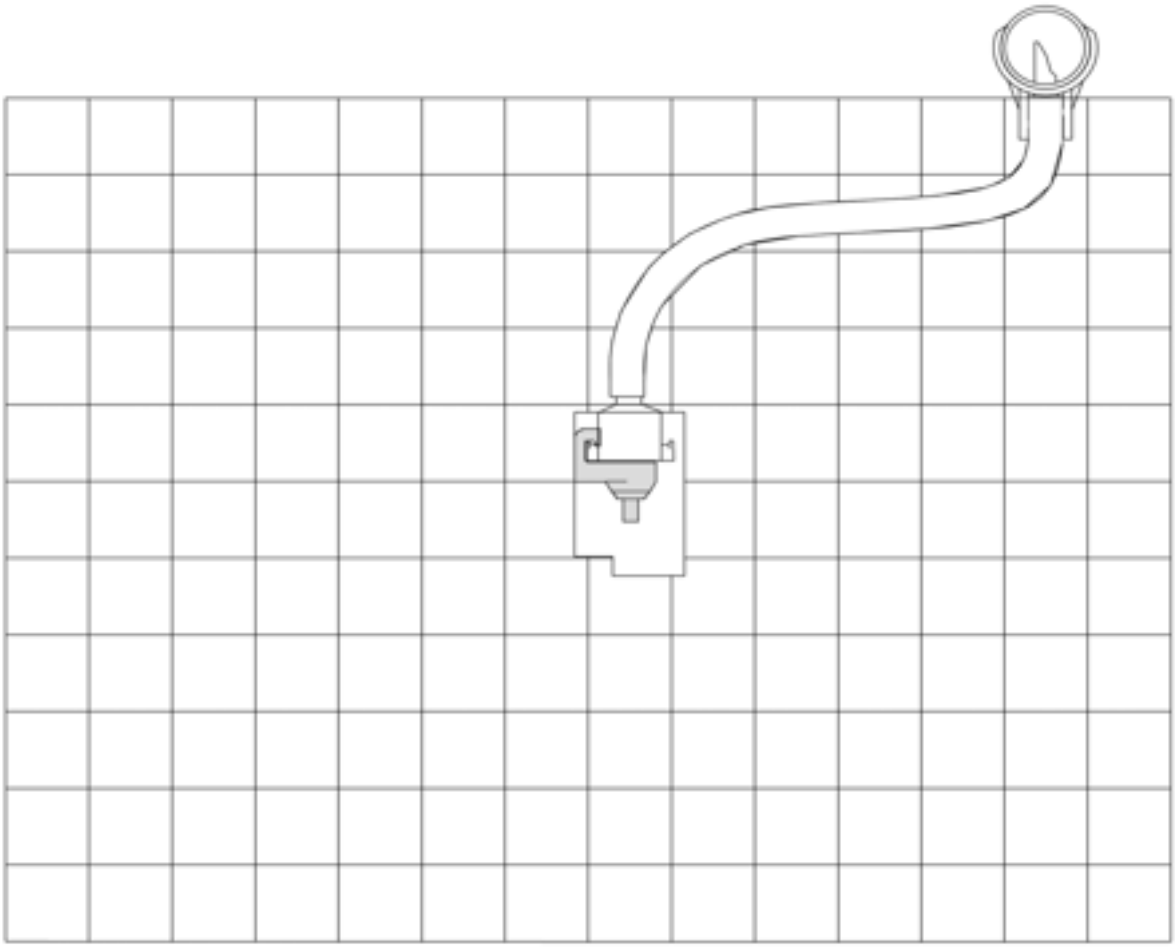

Startgrow

The startgrow assembly makes changing the height of the nipple easy. You can use a cord and hook (BG223) for individual adjustment or the automatic winching system (see page 27) for easier adjustment.

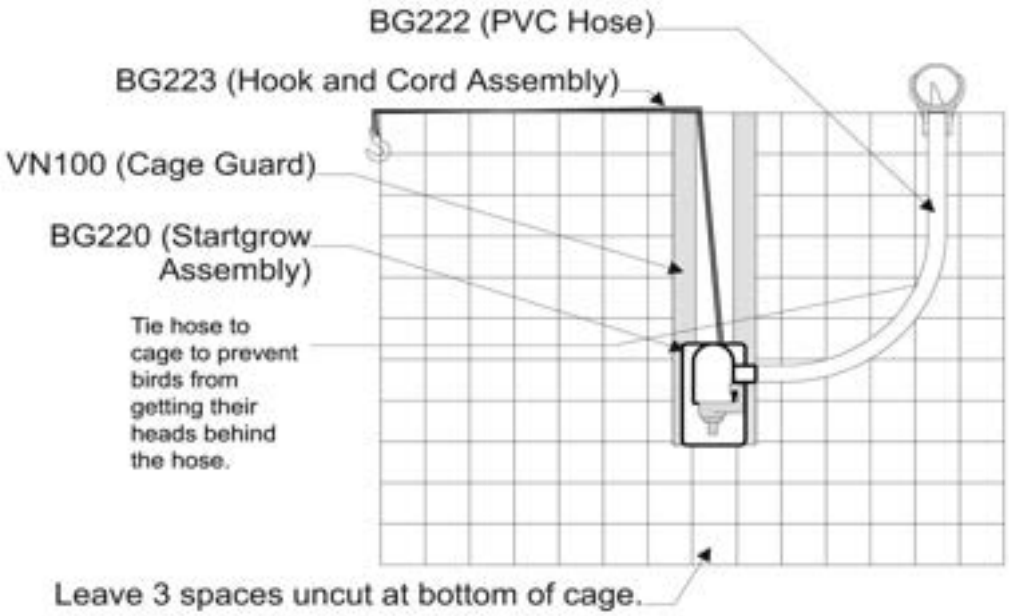

You can alternate with one partition cups and one partition nipples to give pullets exposure to both types of drinker.

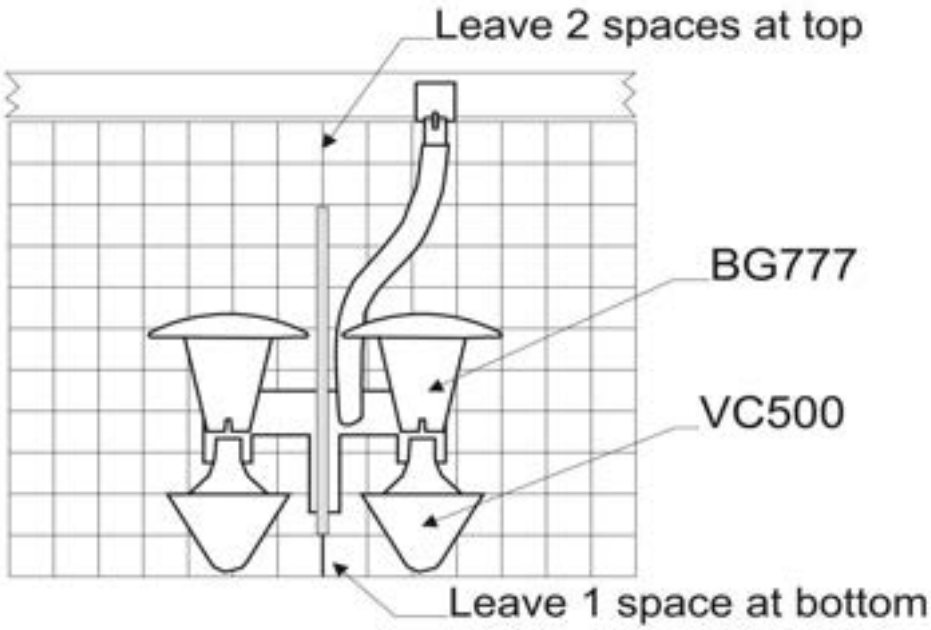

Extended Startgrow

Use the extended startgrow for partitions with the cage stands.

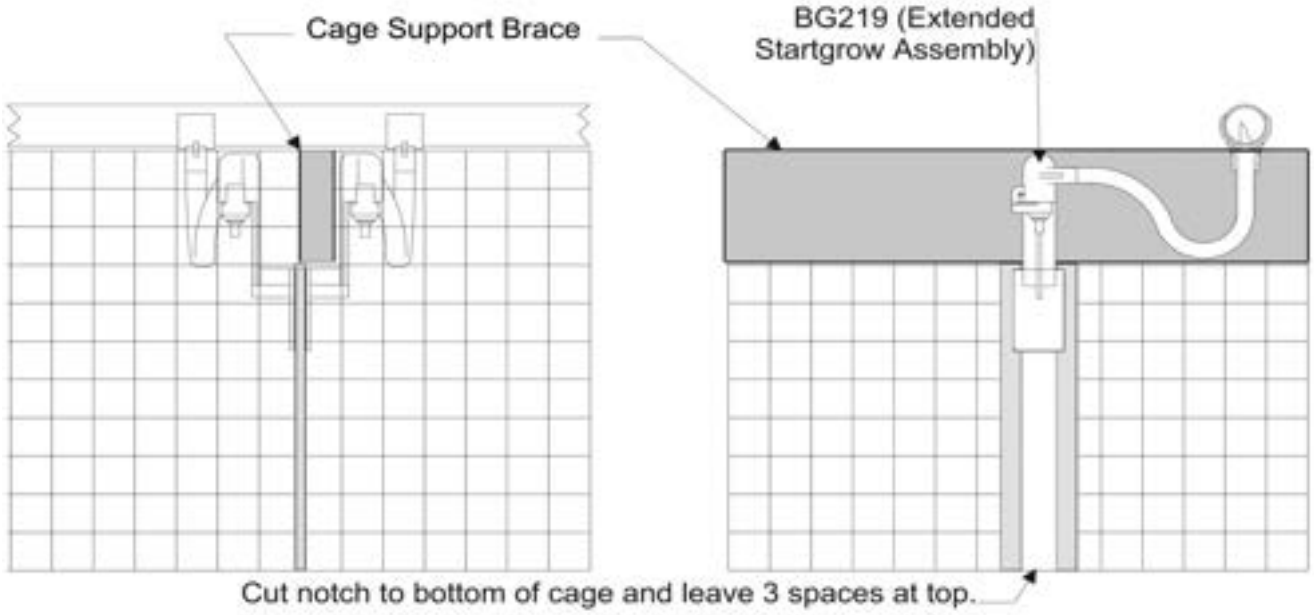

Autowinching with extended startgrow

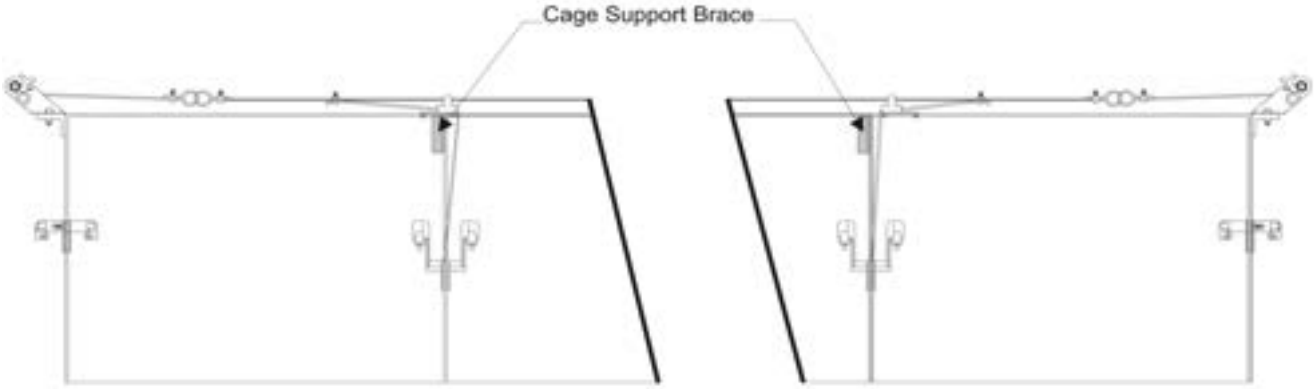

Automatic Winching (Top)

Cable outside cage

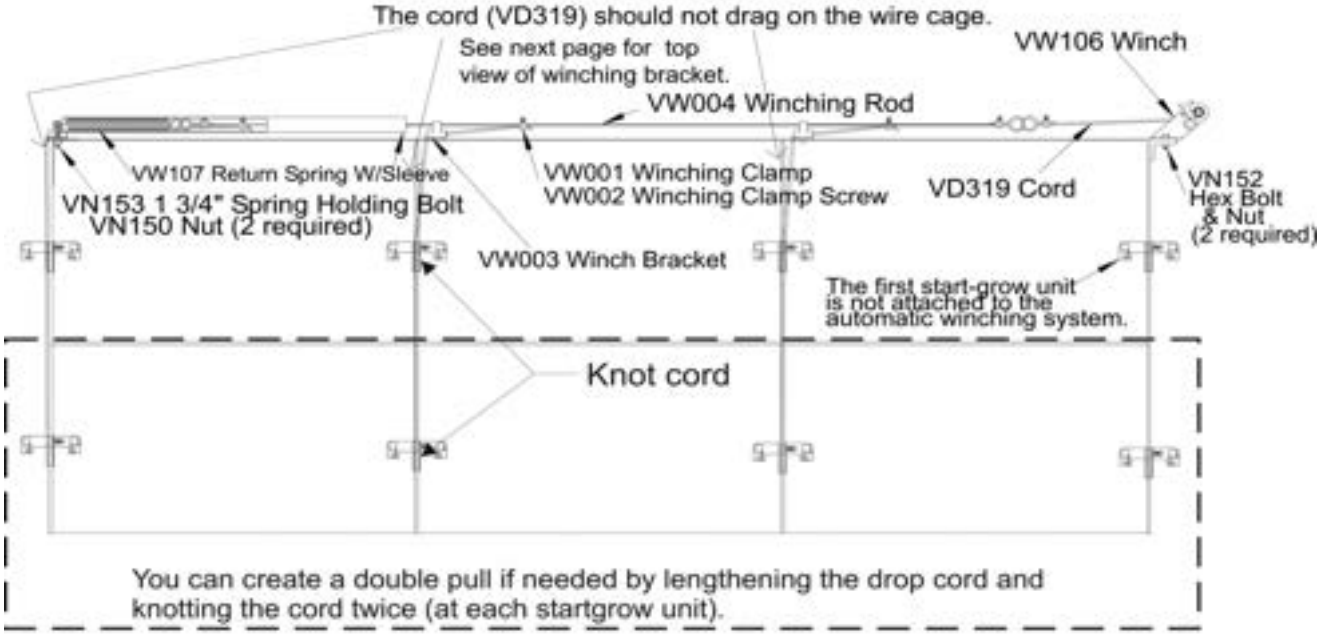

Each winch can pull 220 startgrow units.

Example: A 24" cage single pull system would work up to 440 FT (or up to 220 FT for a double pull system).

VW106 - Winch

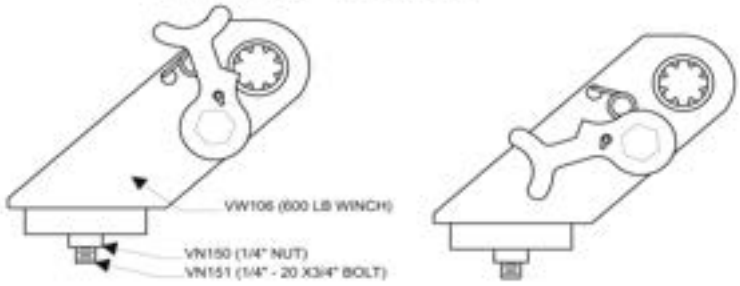

Automatic Winching (Bottom)

Cable inside cage

The bottom setup is for when the scraper board is right on top of the cage, leaving no room for brackets and rod.

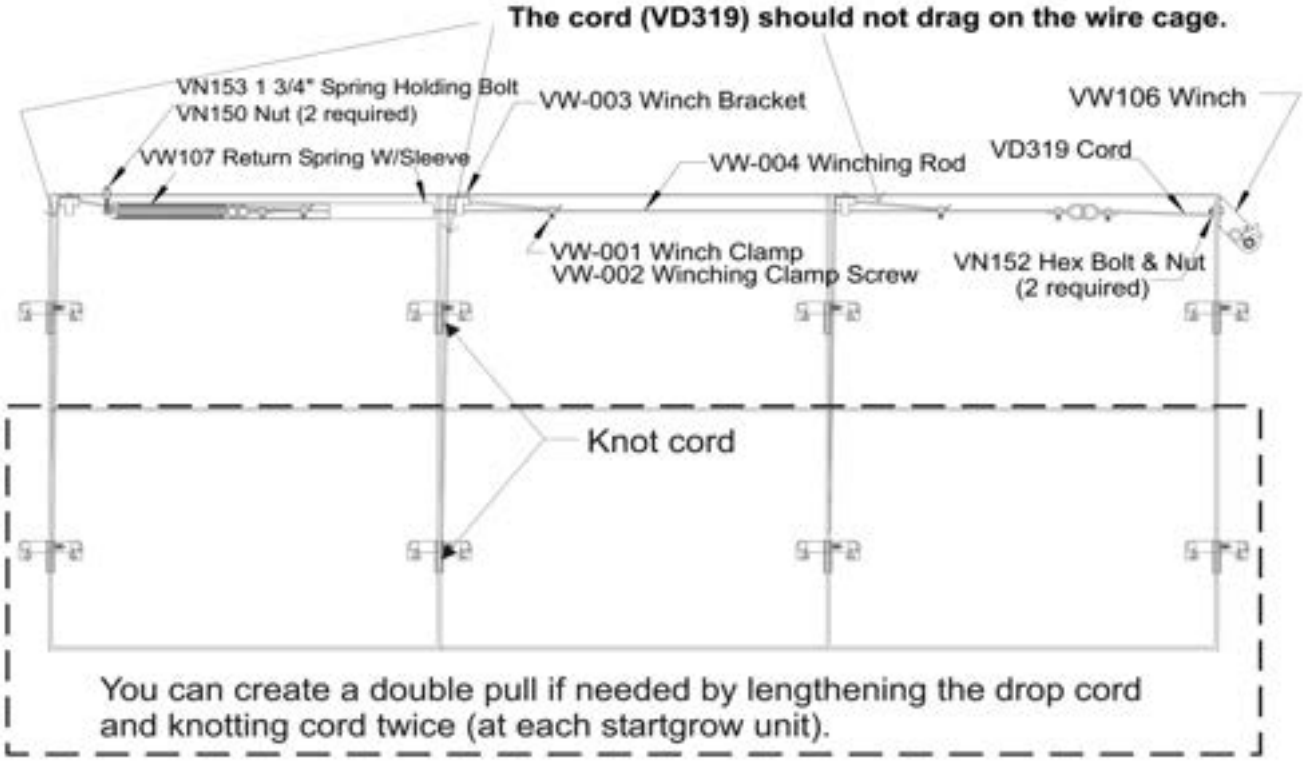

You can create a double pull if needed by lengthening the drop cord and knotting cord twice (at each startgrow unit).

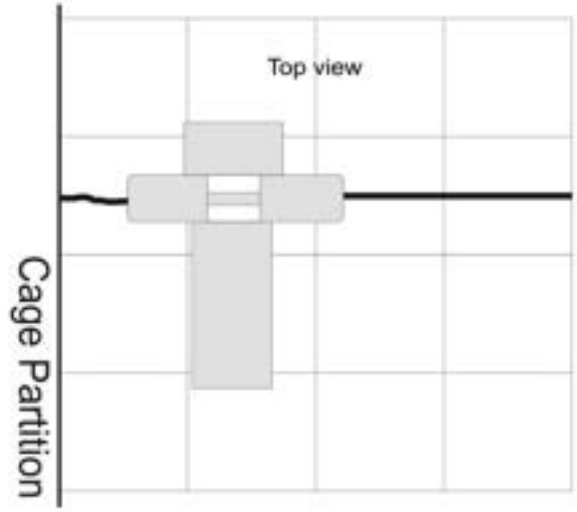

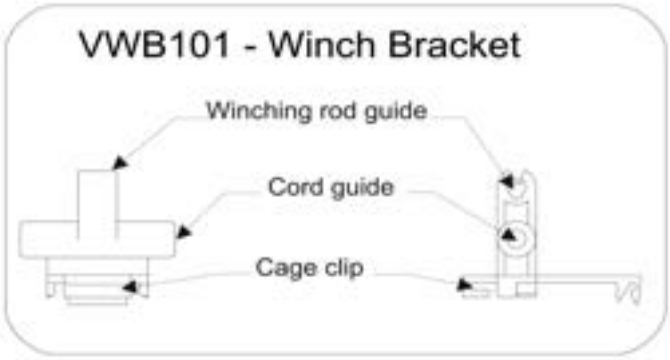

OPERATION
&
MANAGEMENT

Layer Management Procedures

Some managers raise standpipe pressure to 12-14" to start until case weight (48 LBS per 30 dozen) is reached before lowering pressure to maintenance level.

Moist or wet droppings *can* be caused by excessive water consumption in hot weather or by too much salt in the diet, by disease or other factors. If the nipples are suspected, send a sample (3-5 nipples) to your distributor or directly to Val Products with your name, address, age of system and any other pertinent data.

Important

When starting layers that have been raised as pullets with cups or bell drinkers, turn on bright lights for the first 5 days and hold feed for the first 8 hours in the cages. This will help adjust them to nipple drinkers.

Notes

Layer Nipple and **V-Max Regulator Management**

The two most important procedures for the Layer Nipple are ① height of drinker from the floor in relation to the bird and ② amount of pressure in the system (water height in the standpipe). Both of these procedures must change during the growout cycle. The following instructions detail the various changes of the cycle.

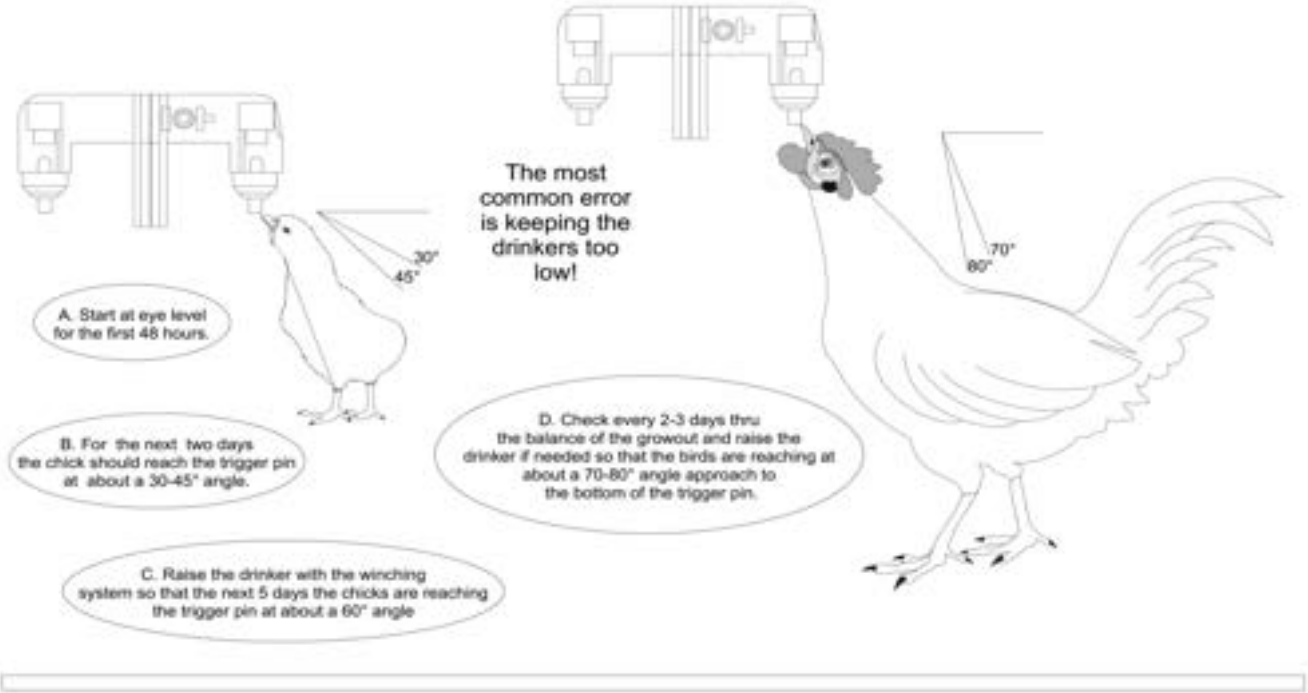

Triple the life of your V-Max Regulator diaphragm by adjusting your regulator back to about a 2-4 inch water level immediately after birds are taken out of the house (to relieve the spring pressure on the diaphragm). This is also very practical because the regulator must be readjusted to the 2-4 inch water level anyway when chicks are brought into the house for startup.

Cleaning Water Lines

A regular cleaning program should be used to eliminate water line contaminants; including bacteria, sludge, drug residues and hard water deposits.

GENERAL CLEANING

1. Mix cleaning solution as indicated below.
2. Fill watering system with solution.
3. Allow solution to sit 1 to 3 hours.
4. Flush system with plain water using high pressure.
5. Check filters.

REGULAR MAINTENANCE

Watering system should be cleaned every four months (or every month in hot weather) during production with one of the following **at a ratio of 1:128**:

Administration	Vinegar for alkaline water	Citric Acid for alkaline water	Ammonia for acid base water
Medicator	64 fl oz. white household vinegar + 64 fl oz. water = 1 gal. of stock	1 pack 205 gm citric acid + 128 fl oz. water = 1 gal. of stock	4 fl oz. clear household ammonia + 124 fl oz. water = 1 gal. of stock

BETWEEN FLOCKS

Watering system should be cleaned between flocks. A stronger cleaning solution can be used, since no birds will be drinking the water. It is important to thoroughly flush the system with plain water to prevent storing high concentrations of cleaning solution in the watering system until the next flock is placed in the house.

Administration	ProClean	Vinegar for alkaline water	Citric Acid for alkaline water	Ammonia for acid base water
Medicator	128 fl oz. ProClean = 1 gal. of stock	128 fl oz. white household vinegar = 1 gal. of stock	4 packs 205 gm citric acid + 128 fl oz. water = 1 gal. of stock	16 fl oz. clear household ammonia + 112 fl oz. water = 1 gal. of stock

CHLORIN

Chlorine is now considered to be the key salmonella fighter.

When using chlorine, the following dosages and application methods should be followed:

Administration	Chlorine
Medicator	5 fl oz. bleach + 123 fl oz. water = 1 gallon of stock solution

This solution should run out in the poultry house through the medicator at 128 parts of water to 1 part of stock solution. This cleans the whole system including Val nipples drinkers and sterilizes the entire system.

Do not place chlorine agents in the system when the house is vacant. This places heavy residue in the pipes and nipple drinkers which can clog up various parts of

Vaccination Procedure

Medicate during peak water demand.

1. Withdraw chlorine 12 hours prior to vaccination or medication.
2. Neutralize with milk replacer for 3 hours prior to start of vaccination.
3. At the end of the withdrawal time, mix the vaccination in the proportion indicated on the packaging (if it is powder, make sure it is completely dissolved). **NOTE:** Add food color dye to mixture if there is no color to the vaccine or see #6 for quantity of water in pipe to drain.
4. Put the medicator tube into the bucket (clip the tube to the side of the bucket to keep the filter off the bottom of the bucket) and lower the water lines to the proper height.
5. Flush the lines until you see the color at the end of the line or flush 1/3 gallons (1.2 L) per 10 FT piece of pipe if there is no color. This will give the birds cooler water and ensure the maximum effectiveness of the medication.
6. When the vaccination bucket is empty, fill it with clean water to flush the medicator. Periodically disassemble and clean your injection assembly. See your medicator manual for more info.

Please keep my water clean and cool.

Flushing Procedure

If you don't have the Val flush kit (page 19) then don't forget to hook up a hose and open the ballvalve on the end assembly.

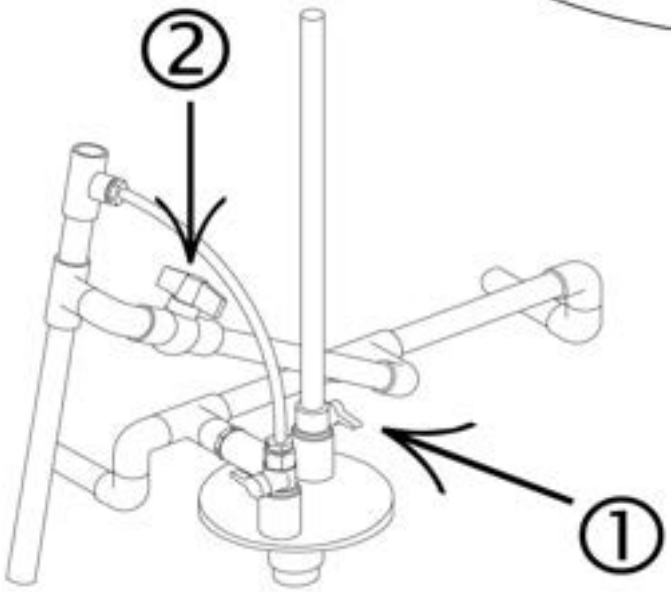

1. If you have red standpipe caps, close the standpipe shutoffs on regulator and end assembly. If you have the new, yellow shutoff caps, go to step 2.
2. Open the ballvalve to flush and then close when done flushing.
3. Open the standpipe shutoffs on regulator and end assembly if you closed them in step 1.

Don't flush more than one tier at a time or you will pull air into the

Important Water Facts

Water Quality

Contaminant	Recommendation
TDS- Total Dissolved Solids	< 3000 mg/liter
* Hardness (calcium and magnesium salts)	< 20 mg/liter
Salinity	< 1000 PPM
Nitrates (NO_3)	< 5 PPM
Nitrites (NO_2)	< 5 PPM
Total bacterial count	< 3000/ml
Total coliform count	< 300/ml
Total E. coli	0
pH	6-9
Iron	< .5 mg/L

* Hard water produces deposits on nipples and water faucets and decreases their life and usefulness.

Water Temperature	Bird Reaction
50-60°F (10-15°C)	Comfortable drinking
> 86°F (30°C)	Reduction in drinking
> 111°F (44°C)	Refusal to drink

Water temperature is also an important factor in weight maintenance. Water lines outside the poultry house should be buried at least 2 FT (61 CM) underground. Water lines inside the house (especially when the lines run against an uninsulated roof) should be insulated R4 or better. Tanks should be painted white or silver and shaded from the sun when possible. If water is still not cool enough, the Val Chiller unit (VC990) is recommended. See page 21.

I can't drink hot water.

Chemical Resistance

Do not use these chemicals on or in the Val Watering System.

Acetaldehyde	Dow Corning® Molykote 111	Ortho® Isotex Insect Spray
Acetone	Dow Corning® Silicone Fluid DC 230	Ortho® Home Orchard Spray
Acetophenone	Dowgard® Permanent Anti-Freeze	Petroleum Jelly
alpha-Chloronapthalene	Ethyl Alcohol	Phenol
Amchem Ridoline 322®	Ethyl Acetate	Pine Oil
Amchem Ridoline 421®	Ethylene Dichloride	Porion Ink
Amchem Ridoline 804®	Ethylene Chloride	Propylene Glycol
Amchem Ridoline 53®	Formaldehyde >5%	PVC Upholstery Materials
Andis® Hair Clipper Lube	Gasoline	Pyrethrin
Balkamp® Sil Glyde	Isopropyl Alcohol	Shell Diala AX®
Benzene	Johnson's® No Roach	Shell Tellus 33®
Brake Fluid	Kerosene	Stoddard® Solvent
Bromine	Kiwi® Shoe Polish (Solid)	Sulfur Dioxide
Butyl Ether	meta-Cresol	Sunoco Sunvis 931®
Carbon Tetrachloride	Methanol	Tenneco® L465 Synthetic
Chlordane	Methyl Isobutyl Ketone	Toluene
Chlorobenzene	Methyl Ethyl Ketone	Toothpaste
Chloroform	Molykote 557®	Turpentine
Cyelohexanone	Naptha (VM & P)	Xylene
Diethyl Ketone	Novus® Plastic Polish #1/#2	
Dioctyl Phthalate	Nye Rheolube 745R-2®	
Dishwashing Detergents	Octyl Alcohol	

This is only a partial list. Remember not to use any oil-based products.

This page left intentionally blank

SECTION 24
LAYER WATERING PRICING

IN THIS CATALOG SECTION

PAGE NUMBER	CONTENTS
24-02	Regulators
24-03	Intakes / Hose / End Assemblies / Flush Kits
24-04	Standpipes
24-05	Header Kits / Lead In Kits / Air Releases
24-06	Filter Kits / Water Meters / Medicators / Cleaner & Solutions
24-07	Layer Pipe Kits - Round Pipe
24-08	Order Information for Cages with Angled Tops
24-09	Layer Pipe Kits - Square Pipe (Small)
24-10	Layer Pipe Kits - Square Pipe (Large)
24-11 thru 24-13	Drinker Flow Charts
24-14	Drinkers / Miscellaneous Parts / Replacement Standpipe Parts
24-15	Competitor Changeover & Replacement items
24-16	Pipe & Connectors / PVC Fittings
24-17	VR201 Regulator
24-18	VR204 Regulator
24-19	VR205 Regulator / VR209 Regulator
24-20 thru 24-21	Regulator Repair Parts
24-22	Filter Kit Repair Parts

Toll-free: 1-800-99VALCO
Phone: (+1) 419-678-8731
Fax: (+1) 419-678-2200

WWW.VAL-CO.COM

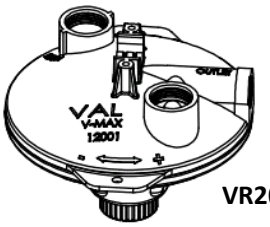

VR201

REGULATORS

V-MAX Regulator Ordering Instructions

1. **Order the regulator.**
2. **Order desired bracket**
3. **Order the desired intake.**
4. **Order the desired standpipe.**
5. **Order the intake hose.**

(3/4" for flush intake, 3/8" for old style intake.)

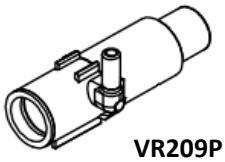

VR209P

V-MAX VR201 FLOOR REGULATOR KIT (requires 1 standpipe)

CATALOG #	ITEM DESCRIPTION	SHIP WEIGHT LBS.	SHIP WEIGHT KG.	LIST PRICE
VR201K	Cage Regulator Kit	1.85	0.84	

V-MAX VR201 FLOOR REGULATOR KIT

VRP29	Cage Regulator Support Bracket	0.39	0.18	
610067	Cage Regulator Support Bracket	1.25	0.57	

V-MAX VR204 SLOPE REGULATOR (req. 2 standpipe - 1 must be 'K' designation)

CATALOG #	ITEM DESCRIPTION	SHIP WEIGHT LBS.	SHIP WEIGHT KG.	LIST PRICE
VR204KA	Cage Slope Regulator Kit - Aluminum	1.87	0.85	
VR204KC	Cage Slope Regulator Kit - Conduit	1.85	0.84	

VR209 SLOPE REGULATOR

CATALOG #	ITEM DESCRIPTION	SHIP WEIGHT LBS.	SHIP WEIGHT KG.	LIST PRICE
VR211-18	Slope Regulator Kit With 18" Standpipe & Coupler (Conduit)	0.35	0.2	
VR211-24	Slope Regulator Kit With 24" Standpipe & Coupler (Conduit)	0.36	0.2	
VR211-30	Slope Regulator Kit With 30" Standpipe & Coupler (Conduit)	0.38	0.2	
VR209P	Slope Regulator Only - Automatic Flush Thru	0.18	0.1	
VR209S	Air Release with "L" Stem	0.11	0.1	
820513	Air Release with Side Exit Stem	0.10	0.0	
820515	Slope Regulator Only - with Side Exit Stem	0.17	0.1	
820516	Slope Regulator Only - with Side Stem Plug	0.17	0.1	
VRP90	Slope Regulator - Left Kit for VR209	0.11	0.0	

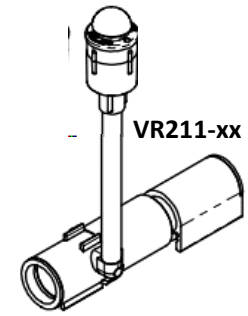

VR211-xx

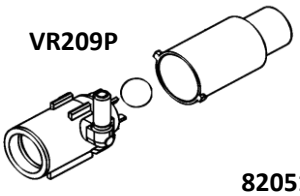

VR209P

820515
820513 (no SS Ball)

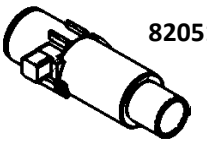

820516

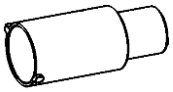

VRP90

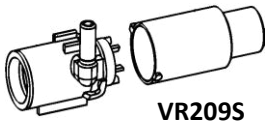

VR209S

VR205 HIGH PRESSURE REGULATOR

CATALOG #	ITEM DESCRIPTION	SHIP WEIGHT LBS.	SHIP WEIGHT KG.	LIST PRICE
VR205	High Pressure Regulator Kit - No Gauges	2.16	0.98	
VR205-1	High Pressure Regulator Kit - 1 Oil Filled Pressure Gauge	2.65	1.20	
VR205-2	High Pressure Regulator Kit - 2 Oil Filled Pressure Gauges	3.14	1.42	

Maximum Incoming Pressure: 100 PSI *Pressure Range: 25 PSI Minimum*

INDIVIDUAL REGULATOR

CATALOG #	ITEM DESCRIPTION	SHIP WEIGHT LBS.	SHIP WEIGHT KG.	LIST PRICE
12001	V-MAX Regulator only for VR201K	1.54	0.70	
12002	V-MAX Regulator only for VR202K	1.48	0.67	
12003	V-MAX Regulator only for VR203K	1.60	0.73	
12004	V-MAX Regulator only for VR204K	1.60	0.73	

Toll-free: 1-800-99VALCO
Phone: (+1) 419-678-8731
Fax: (+1) 419-678-2200

WWW.VAL-CO.COM

INTAKE KITS

STANDARD

Incoming Pressure
15-40 PSI

Pressure Range
0-1.3 PSI or 0-36" Water Column

Note: Head of house regulator pressure not to be set below 25psi.

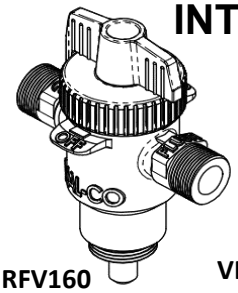
RFV160

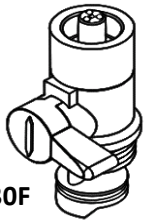
VRP30F

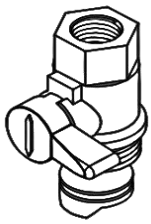
VRP09

LOW PRESSURE

Incoming Pressure
4-15 PSI

Pressure Range
0-1.3 PSI or 0-36" Water Column

INTAKE KITS

CATALOG #	ITEM DESCRIPTION	SHIP WEIGHT LBS.	SHIP WEIGHT KG.	LIST PRICE
RFV160K	Inlet Kit, Flushing, Shut Off (incl. (2) PMTT6, VRP66, VRP67S, (2) PMHC3-4)	0.62	0.28	
RFV160LK	Inlet Kit, Flushing, Shut off, Low pressure (incl. same parts as RFV160K)	0.66	0.30	
VRP09K	Inlet Kit, Shut off (incl, (2) VRP45 & (2) VRP375)	0.16	0.07	
VRP09LK	Inlet Kit, Shut off, low pressure (incl, (2) VRP45 & (2) VRP375)	0.16	0.07	

INDIVIDUAL INTAKE

RFV160	Regulator Flushing Intake only	0.41	0.18	
RFV160L	Regulator Flushing Intake only - Low Pressure	0.41	0.18	
VRP09	Shutoff Intake only	0.13	0.06	
VRP09L	Shutoff Intake only - Low Pressure	0.09	0.04	
VRP30F	Shutoff Intake with Flex Standpipe Connection	0.12	0.05	

HOSE

VRP79-Q300	PVC Yellow Regulator drop HOSE, ¾" ID (**Unit of measure: 300 Foot Roll**) For use with new style flush intake. (RFV160)	66.20	30.03	
VRP79	PVC Yellow Regulator drop HOSE, ¾" ID (**Unit of measure: Per foot**) For use with new style flush intake. (RFV160)	0.18	0.08	
VRP48-Q500	PVC Yellow Regulator Drop Hose, 3/8" (**Unit of measure: 500 Foot Roll**) For use with old style intake. (VRP09)	39.60	17.96	
VRP48	PVC Yellow Regulator Drop Hose, 3/8" (**Unit of measure: per foot**) For use with old style intake. (VRP09)	0.08	0.04	

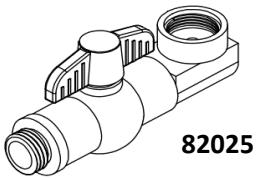
820251

END ASSEMBLIES (requires 1 standpipe)

CATALOG #	ITEM DESCRIPTION	SHIP WEIGHT LBS.	SHIP WEIGHT KG.	LIST PRICE
820251	End Assembly Kit, US standard thread, Garden Hose Adapter	0.37	0.17	
820252	End Assembly Kit, Metric thread, Garden Hose Adapter	0.39	0.18	

FLUSH KITS FOR CAGES

VF100B	With 12" Standpipe - Lower Tiers	10.28	4.66	
VF100T	With 12" Standpipe - Top Tier Only	2.36	1.1	
VF100TM	With 12" Standpipe - Top Tier Only (Metric)	2.34	1.06	
VF100-18B	With 18" Standpipe - Lower Tiers	10.40	4.72	
VF100-18T	With 18" Standpipe - Top Tier Only	2.48	1.1	
VF100-18TM	With 18" Standpipe - Top Tier Only (Metric)	2.45	1.11	
VF100-24B	With 24" Standpipe - Lower Tiers	3.60	1.63	
VF100-24T	With 24" Standpipe - Top Tier Only	2.15	1.0	
VF100-24TM	With 24" Standpipe - Top Tier Only (Metric)	2.57	1.17	
VF100SB	For Stacked Cages - With 24" Standpipe - Lower Tiers	8.00	3.63	
VF100SBM	For Stacked Cages - With 24" Standpipe - Lower Tiers (Metric)	2.35	1.07	

Toll-free: 1-800-99VALCO
Phone: (+1) 419-678-8731
Fax: (+1) 419-678-2200

WWW.VAL-CO.COM

FLEX STANDPIPE

CATALOG #	ITEM DESCRIPTION	SHIP WEIGHT LBS.	SHIP WEIGHT KG.	LIST PRICE
Foldover Standpipes				
VSP18FO	FLEX SP ASSY, 18", FOLD OVER	0.44	0.20	
VSP24FO	FLEX SP ASSY, 24", FOLD OVER	0.50	0.23	
VSP30FO	FLEX SP ASSY, 30", FOLD OVER	0.47	0.21	
Shutoff Standpipes				
VSP18FS	FLEX SP ASSY, 18", SHUTOFF	0.36	0.16	
VSP24FS	FLEX SP ASSY, 24", SHUTOFF	0.49	0.22	
VSP30FS	FLEX SP ASSY, 30", SHUTOFF	0.56	0.25	
1/2" NPT Standpipes				
VSP18FK	FLEX SP ASSY, 18", INTAKE	0.35	0.16	
VSP24FK	FLEX SP ASSY, 24", INTAKE	0.44	0.20	
VSP30FK	FLEX SP ASSY, 30", INTAKE	0.46	0.21	

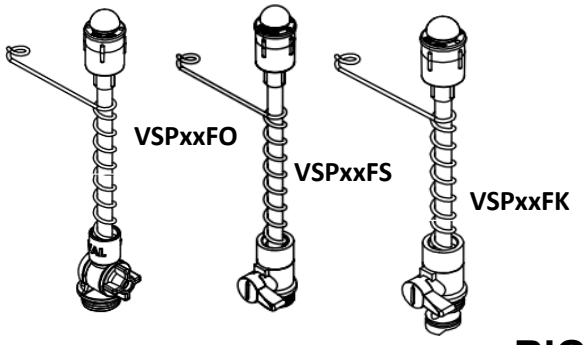

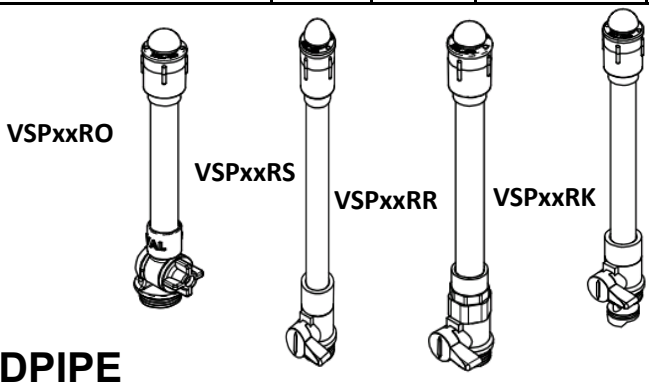

RIGID STANDPIPE

CATALOG #	ITEM DESCRIPTION	SHIP WEIGHT LBS.	SHIP WEIGHT KG.	LIST PRICE
Foldover Standpipes				
VSP12RO	RIGID SP ASSY, 12", FOLD OVER	0.22	0.10	
VSP18RO	RIGID SP ASSY, 18", FOLD OVER	0.33	0.15	
VSP24RO	RIGID SP ASSY, 24", FOLD OVER	0.37	0.17	
VSP30RO	RIGID SP ASSY, 30", FOLD OVER	0.40	0.18	
VSP36RO	RIGID SP ASSY, 36", FOLD OVER	0.38	0.17	
Shutoff Standpipes				
VSP12RS	RIGID SP ASSY, 12", SHUTOFF	0.30	0.14	
VSP18RS	RIGID SP ASSY, 18", SHUTOFF	0.32	0.15	
VSP24RS	RIGID SP ASSY, 24", SHUTOFF	0.40	0.18	
VSP30RS	RIGID SP ASSY, 30", SHUTOFF	0.32	0.14	
VSP36RS	RIGID SP ASSY, 36", SHUTOFF	0.36	0.16	
1/2" NPT Standpipes				
VSP12RR	RIGID SP ASSY, 12", 1/2" NPT	0.24	0.11	
VSP18RR	RIGID SP ASSY, 18", 1/2" NPT	0.29	0.13	
VSP24RR	RIGID SP ASSY, 24", 1/2" NPT	0.41	0.19	
VSP30RR	RIGID SP ASSY, 30", 1/2" NPT	0.39	0.18	
VSP36RR	RIGID SP ASSY, 36", 1/2" NPT	0.44	0.20	
Intake Standpipes				
VSP12RK	RIGID SP ASSY, 12", INTAKE	0.21	0.10	
VSP18RK	RIGID SP ASSY, 18", INTAKE	0.25	0.11	
VSP24RK	RIGID SP ASSY, 24", INTAKE	0.29	0.13	
VSP30RK	RIGID SP ASSY, 30", INTAKE	0.33	0.15	
VSP36RK	RIGID SP ASSY, 36", INTAKE	0.37	0.17	

BRUSHES FOR STANDPIPES

VB151	Bottle Brush for Rigid Standpipe	0.11	0.05	
VB151F	Bottle Brush for Flex Standpipe	0.11	0.05	

Toll-free: 1-800-99VALCO
Phone: (+1) 419-678-8731
Fax: (+1) 419-678-2200

WWW.VAL-CO.COM

LAYER WATERING OPTIONS

HEADER KITS

CATALOG #	ITEM DESCRIPTION	SHIP WEIGHT LBS.	SHIP WEIGHT KG.	LIST PRICE
VH100B	Cage Header Kit - Lower Tiers	1.88	0.85	
VH100T	Cage Header Kit - Top Tier Only	1.79	0.81	
VH100SB	Cage Header Kit - for Stacked Cage Lower Tiers	1.40	0.64	
VH100ST	Cage Header Kit - for Stacked Cage Top Tier Only	1.55	0.70	

LEAD-IN KITS

CATALOG #	ITEM DESCRIPTION	SHIP WEIGHT LBS.	SHIP WEIGHT KG.	LIST PRICE
VL100	Lead-In Kit From Filter to First Row	8.46	3.84	
VL200	Lead-In Kit From One Row to Next Row	4.03	1.83	

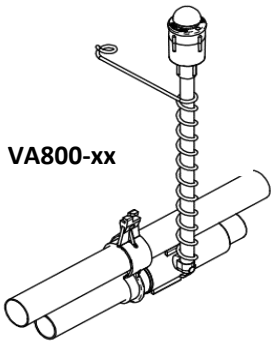

VA800-xx

AIR RELEASES

CATALOG #	ITEM DESCRIPTION	SHIP WEIGHT LBS.	SHIP WEIGHT KG.	LIST PRICE
VA800-24	Air Release With Auto Shutoff & 24" Flex Standpipe - Conduit	0.71	0.32	
VA800-30	Air Release With Auto Shutoff & 30" Flex Standpipe - Conduit	0.74	0.33	
VR209S	Left Body Only - for Air Release & Slope Regulator	0.11	0.05	

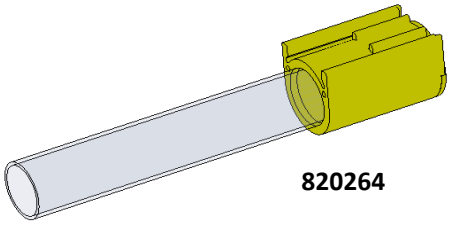

820264

VIEWPORT

CATALOG #	ITEM DESCRIPTION	SHIP WEIGHT LBS.	SHIP WEIGHT KG.	LIST PRICE
820624	Viewport 6" Long - 3/4" Clear PVC with VC145 Coupler	0.12	0.05	

Toll-free: 1-800-99VALCO
Phone: (+1) 419-678-8731
Fax: (+1) 419-678-2200

WWW.VAL-CO.COM

LAYER WATERING OPTIONS

FILTER KIT/BACKFLUSH

CATALOG #	ITEM DESCRIPTION	SHIP WEIGHT LBS.	SHIP WEIGHT KG.	LIST PRICE
VF122	Filter Kit/Backflush Hookup	9.25	4.20	
VF122L	Filter Kit/Backflush Hookup - Low Pressure	9.03	4.10	
VF122-H	Filter Kit - Without Hookup or Gauges(30 Micron Filter)	6.95	3.15	
VF122L-H	Filter Kit - W/O Hookup or Gauges - Low Pressure (50 Micron Filter)	6.74	3.06	

WATER METERS *(kits includes [2] VT132 -3/4" PVC female adapter S X thread)*

CATALOG #	ITEM DESCRIPTION	SHIP WEIGHT LBS.	SHIP WEIGHT KG.	LIST PRICE
820370	**WATER METER KIT**, GAL, LOCAL, 5/8"X3/4", Brass Body, Line Size 3/4"	8.00	3.6	
820371	**WATER METER KIT**, GAL, DIGITAL, 5/8"X3/4", Brass Body, Line Size 3/4"	8.00	3.6	
820372	**WATER METER KIT**, MET, LOCAL, 5/8"X3/4", Brass Body, Line Size 3/4"	8.00	3.6	
820373	**WATER METER KIT**, MET, DIGITAL, 5/8"X3/4", Brass Body, Line Size 3/4"	8.00	3.6	
820374	**WATER METER KIT**, GAL, LOCAL, 5/8" X 3/4", Plastic Body, Line Size 3/4"	8.00	2.7	
820375	**WATER METER KIT**, GAL, DIGITAL, 5/8" X 3/4", Plastic Body, Line Size 3/4"	3.10	2.7	
820376	**WATER METER KIT**, MET, LOCAL, 5/8" X 3/4", Plastic Body, Line Size 3/4"	2.85	2.7	
820377	**WATER METER KIT**, MET, DIGITAL, 5/8" X 3/4", Plastic Body, Line Size 3/4"	8.00	2.7	
820284	PVC Adapter, 1" X 3/4", slip x slip, schedule 40	0.10	0.05	
VT100	3/4" PVC Tee S X S X S	0.01	0.00	
VT102	3/4" PVC 90 ELL S X S	0.07	0.04	
VT132	3/4" PVC Female Adapter S X Thread	0.05	0.02	
VV801	3/4" Ball Valve	0.26	0.11	
VX127	3/4" Union S X S	0.16	0.07	

MEDICATOR

CATALOG #	ITEM DESCRIPTION	SHIP WEIGHT LBS.	SHIP WEIGHT KG.	LIST PRICE
VM501	Dosatron Medicator Kit (D25RE2) - Dilution Range 1:500 to 1:50 (.2% to 2%)	3.41	1.55	
820341	Dosatron Medicator Kit (D25RE5) - Dilution Range 1:100 to 1:20 (1% to 5%)	4.00	1.81	
VM507	Hook-Up Kit for Medicator Dosatron	1.46	0.66	
VM504	Repair Kit for VM500 Dosatron Medicator (D25RE2)	44.00	19.96	

Medicator can be used in high or low pressure systems from 4.3-85 PSI (.3-5.86 Bar).

CLEANERS / SOLUTIONS

CATALOG #	ITEM DESCRIPTION	SHIP WEIGHT LBS.	SHIP WEIGHT KG.	LIST PRICE
PM10TS	10TS Water Treatment System	25.00	11.34	
PMCPABU1	Water Treatment Solution - 5 Gallon (PARAFOS)	50.00	22.68	

Toll-free: 1-800-99VALCO
Phone: (+1) 419-678-8731
Fax: (+1) 419-678-2200

WWW.VAL-CO.COM

LAYER WATERING PIPE KITS - ROUND PIPE w/ J-Lock Saddles (Drinkers not included.)

- For installation on cages with no angle, select catalog number without "-1" suffix (i.e., VP108).
- For installation on cages with angled top, see next page for assistance in selecting "-1" catalog number
- For installation on cages where the coupler needs to be installed on the other end of the pipe add suffix "-REVERSE"

See page 24-08 with chart showing options.

			SADDLE TYPE					
			VL145 - 45° OPEN SADDLE		VL155 - 45° CLOSED SADDLE		VS146 STANDARD SADDLE	
NO. OF DRINKERS	DRINKER SPACING	PIPE LENGTH	CATALOG NUMBER	LIST PRICE	CATALOG NUMBER	LIST PRICE	CATALOG NUMBER	LIST PRICE
3	32"	8 '	VP108-45O		VP108-45C		VP108	
			VP108-45O-1		VP108-45C-1		VP108-1	
3	36"	9 '	VP109-45O		VP109-45C		VP109	
			VP109-45O-1		VP109-45C-1		VP109-1	
3	40"	10 '	VP110-45O		VP110-45C		VP110	
			VP110-45O-1		VP110-45C-1		VP110-1	
4	24"	8 '	VP113-45O		VP113-45C		VP113	
			VP113-45O-1		VP113-45C-1		VP113-1	
4	30"	10 '	VP107-45O		VP107-45C		VP107	
			VP107-45O-1		VP107-45C-1		VP107-1	
5	23.6" 60cm	9.85' 3m	VP112-45O		VP112-45C		VP112	
			VP112-45O-1		VP112-45C-1		VP112-1	
5	24"	10'	VP106-45O		VP106-45C		VP106	
			VP106-45O-1		VP106-45C-1		VP106-1	
6	16"	8'	VP114-45O		VP114-45C		VP114	
			VP114-45O-1		VP114-45C-1		VP114-1	
6	18"	9'	VP104-45O		VP104-45C		VP104	
			VP104-45O-1		VP104-45C-1		VP104-1	
6	18.9" 48cm	9.45' 2.88m	VP111-45O		VP111-45C		VP111	
			VP111-45O-1		VP111-45C-1		VP111-1	
6	20"	10'	VP105-45O		VP105-45C		VP105	
			VP105-45O-1		VP105-45C-1		VP105-1	
7	16"	9.33'	VP103-45O		VP103-45C		VP103	
			VP103-45O-1		VP103-45C-1		VP103-1	
8	12"	8'	VP115-45O		VP115-45C		VP115	
			VP115-45O-1		VP115-45C-1		VP115-1	
8	15"	10'	VP102-45O		VP102-45C		VP102	
			VP102-45O-1		VP102-45C-1		VP102-1	
10	12"	10'	VP101-45O		VP101-45C		VP101	
			VP101-45O-1		VP101-45C-1		VP101-1	
12	10"	10'	VP100-45O		VP100-45C		VP100	
			VP100-45O-1		VP100-45C-1		VP100-1	
16	6"	8'	VP116-45O		VP116-45C		VP116	
			VP116-45O-1		VP116-45C-1		VP116-1	

Select the a model and quantity of drinkers (Page 24-14) to match the number of pipe kits / saddles ordered.

CUSTOM & NON-STOCKED PIPE KITS

Custom square pipe kits are available; call for availability. Note that orders for square pipe kits may not be cancelled after production commences. Not returns are permitted square pipe kits.

Toll-free: 1-800-99VALCO
Phone: (+1) 419-678-8731
Fax: (+1) 419-678-2200

LAYER WATERING PIPE KITS - ROUND PIPE

REGULAR BASE PIPE KIT CATALOG NUMBER CAGE SITS FLAT	METHOD 1 PIPE KIT CATALOG NUMBER WITH -1 "SUFFIX" **OR** CAGE TILTS 8° DOWN TOWARDS TROUGH	**SADDLE TYPE & ORIENTATION** **(add suffix "-REVERSE" for coupler to be installed on opposite end of pipe.)**
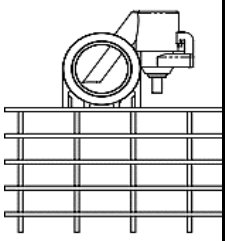	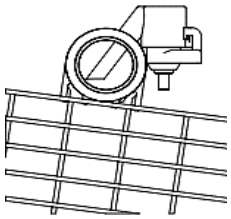 Front of Cage -->	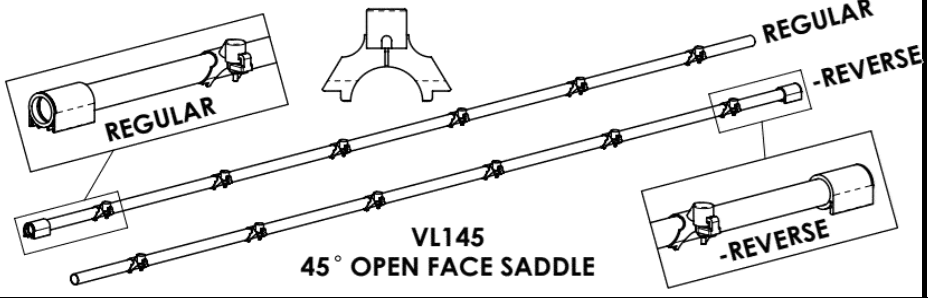
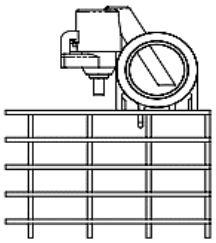	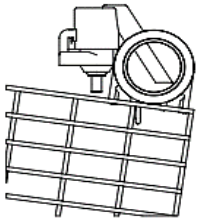 Front of Cage -->	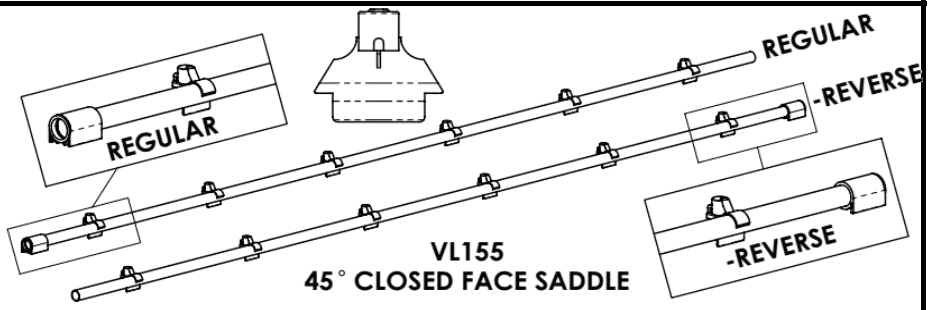
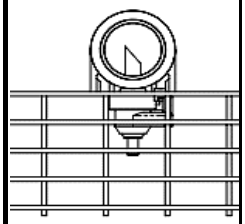	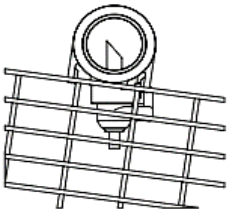 Front of Cage -->	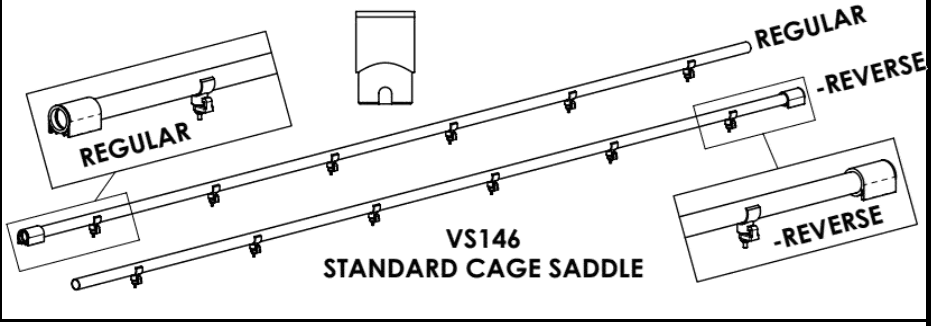

NOTE
Custom or Reverse Pipe Kits Cannot be Returned

LAYER WATERING PIPE KITS - ROUND PIPE

- For installation on cages with no angle, select catalog number without "-1" suffix (i.e., VP108).
- For installation on cages with angled top, select catalog number with suffix "-1" (i.e., VP108-1)
- For installation on cages where the coupler needs to be installed on the other end of the pipe, add suffix "-REVERSE" to the end of the pipe kit number (i.e., VP108-REVERSE or VP108-1-REVERSE)

Toll-free: 1-800-99VALCO
Phone: (+1) 419-678-8731
Fax: (+1) 419-678-2200

WWW.VAL-CO.COM

Layer Watering Pipe Kits

PIPE KITS WITH J-LOCK SADDLES

Order the desired number of PVC pipes with glued VS205 saddles & 820271 square pipe coupler. Drinkers not included.

			Pipe Kits	
NUMBER OF DRINKERS	DRINKER SPACING	PIPE LENGTH	CATALOG NUMBER	LIST PRICE
3	32"	8 '	VP408	
3	36"	9 '	VP409	
3	40"	10 '	VP410	
4	24"	8 '	VP413	
4	30"	10 '	VP407	
5	23.6" 60cm	9.85' 3m	VP412	
5	24"	10 '	VP406	
6	16"	8 '	VP414	
6	18"	9 '	VP404	
6	18.9" 48cm	9.45' 2.88m	VP411	
6	20"	10 '	VP405	
7	16"	9.33 '	VP403	
8	12"	8 '	VP415	
8	15"	10 '	VP402	
10	12"	10 '	VP401	
12	10"	10 '	VP400	
16	6"	8 '	VP416	

Select the a model and quantity of drinkers (Page 24-14) to match the pipe kit(s) chosen.

CUSTOM & NON-STOCKED PIPE KITS

Custom square pipe kits are available; call for availability. Note that orders for square pipe kits may not be cancelled after production commences. Not returns are permitted square pipe kits.

Toll-free: 1-800-99VALCO
Phone: (+1) 419-678-8731
Fax: (+1) 419-678-2200

WWW.VAL-CO.COM

LAYER WATERING PIPE KITS
LARGE 1.1" SQUARE PIPE

PIPE KITS WITH J-LOCK SADDLES

Order the desired number of PVC pipes with glued VS405 saddles & 820270 square pipe coupler. (Drinkers not included.)

			DRINKER TYPE	
			WITH SADDLES & J-LOCK DRINKERS	
NUMBER OF DRINKERS	DRINKER SPACING	PIPE LENGTH	CATALOG NUMBER	LIST PRICE
3	32"	8 '	VP608	
3	36"	9 '	VP609	
3	40"	10 '	VP610	
4	24"	8 '	VP613	
4	30"	10 '	VP607	
5	23.6" 60cm	9.85' 3m	VP612	
5	24"	10 '	VP606	
6	16"	8 '	VP614	
6	18"	9 '	VP604	
6	18.9" 48cm	9.45' 2.88m	VP611	
6	20"	10 '	VP605	
7	16"	9.33 '	VP603	
8	12"	8 '	VP615	
8	15"	10 '	VP602	
10	12"	10 '	VP601	
12	10"	10 '	VP600	
16	6"	8 '	VP616	

Select the a model and quantity of drinkers (page 24-14) to match the pipe kit(s) chosen.

CUSTOM & NON-STOCKED PIPE KITS

Custom square pipe kits are available; call for availability. Note that orders for square pipe kits may not be cancelled after production commences. Not returns are permitted square pipe kits.

Toll-free: 1-800-99VALCO
Phone: (+1) 419-678-8731
Fax: (+1) 419-678-2200

Layer Chicken Drinker Options - Flow Rates

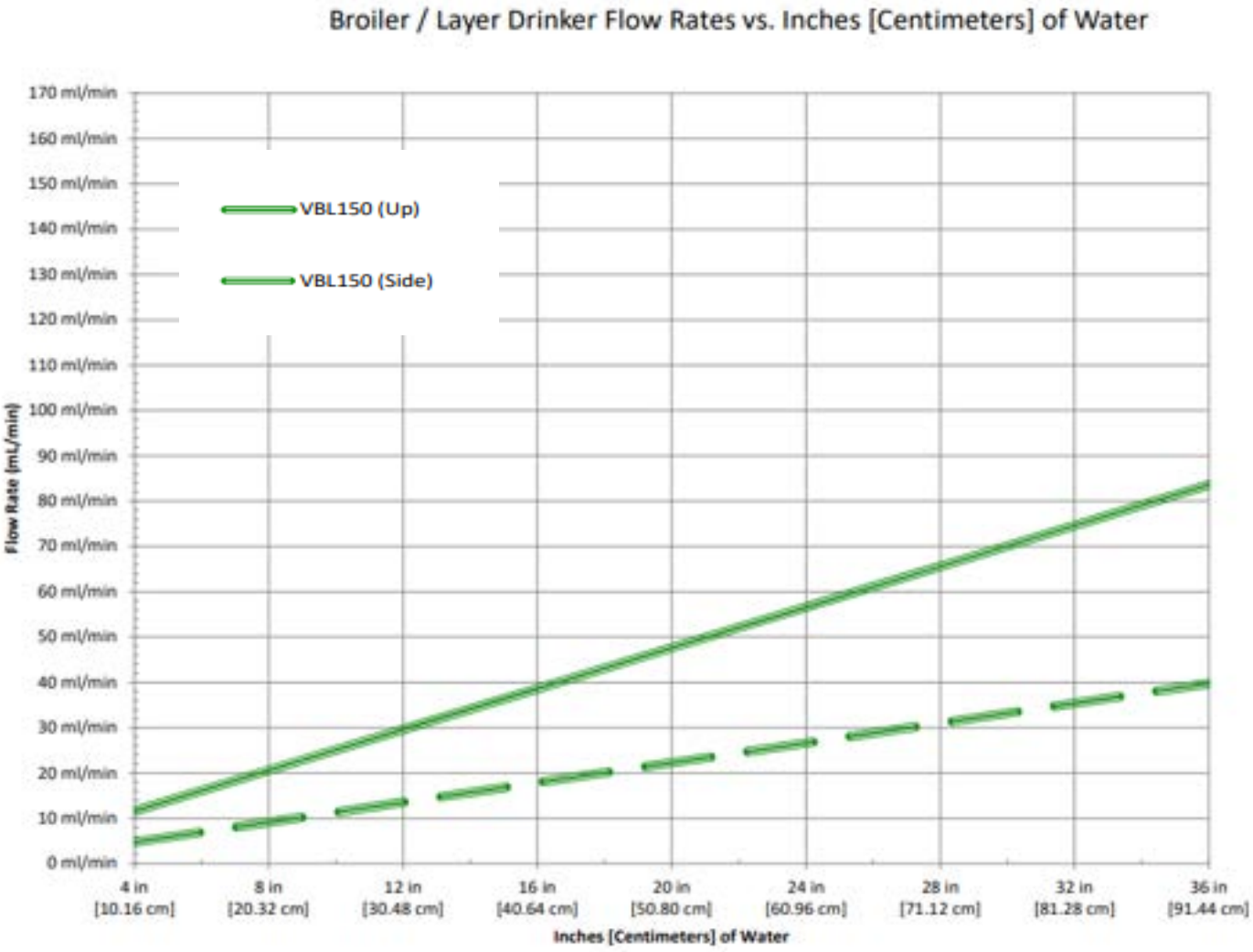

Toll-free: 1-800-99VALCO
Phone: (+1) 419-678-8731
Fax: (+1) 419-678-2200

Layer Chicken Drinker Options - Flow Rates

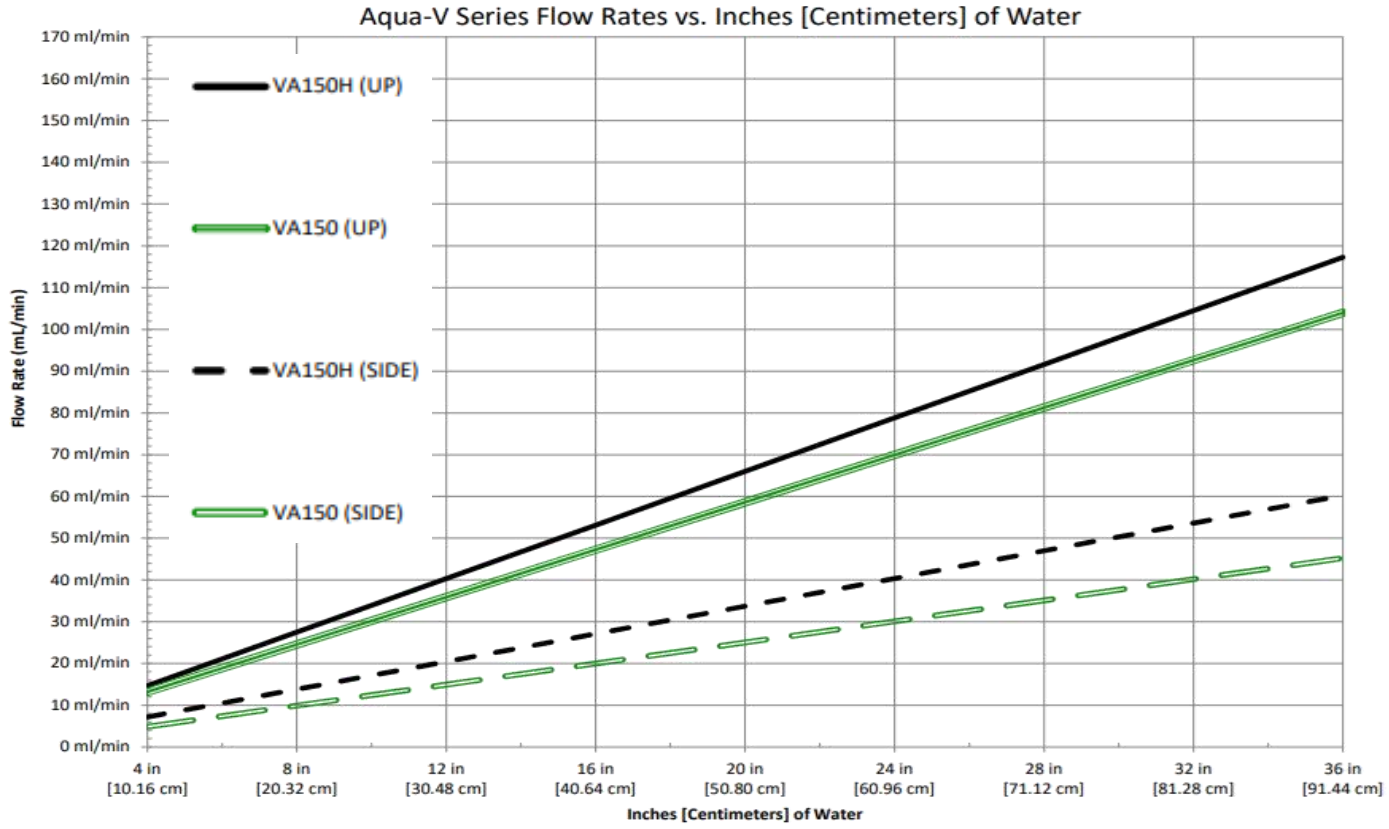

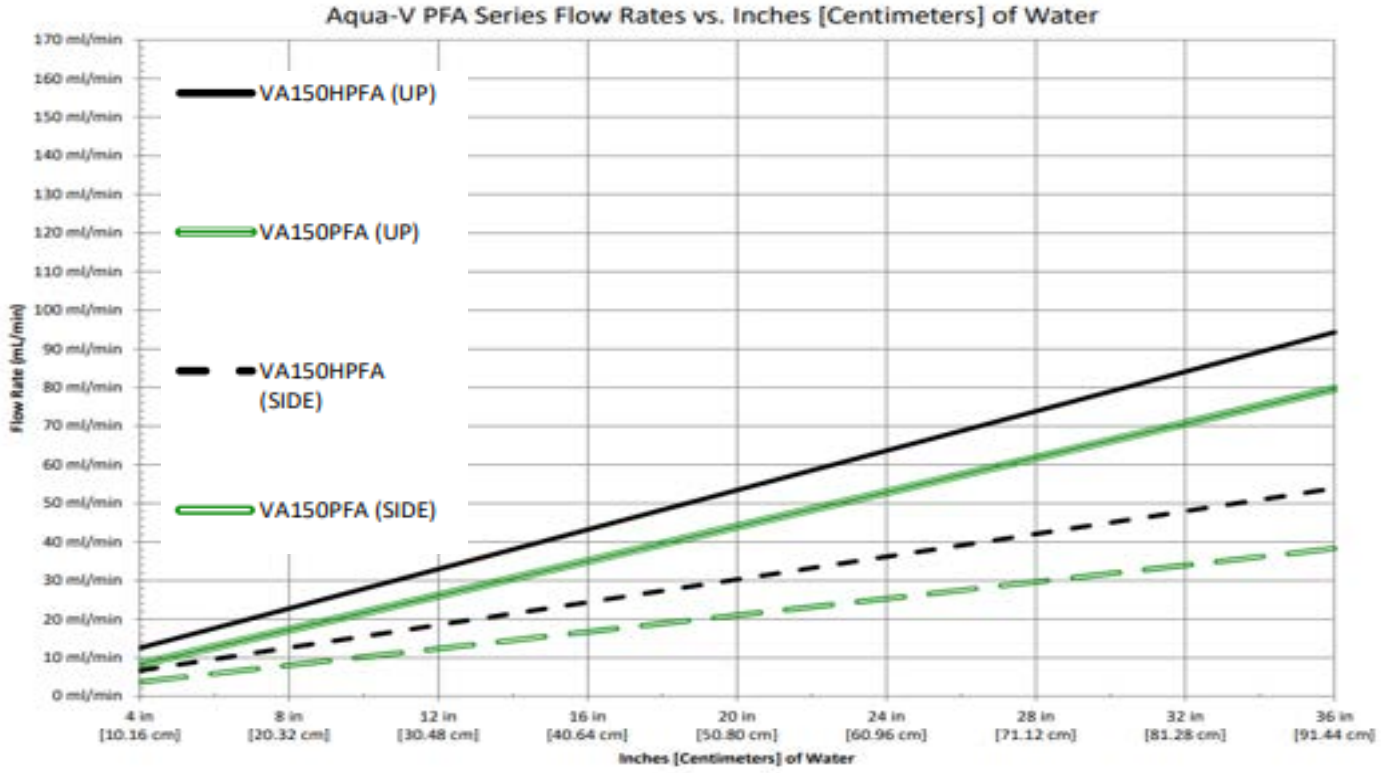

Toll-free: 1-800-99VALCO
Phone: (+1) 419-678-8731
Fax: (+1) 419-678-2200

Layer Chicken Drinker Options - Flow Rates

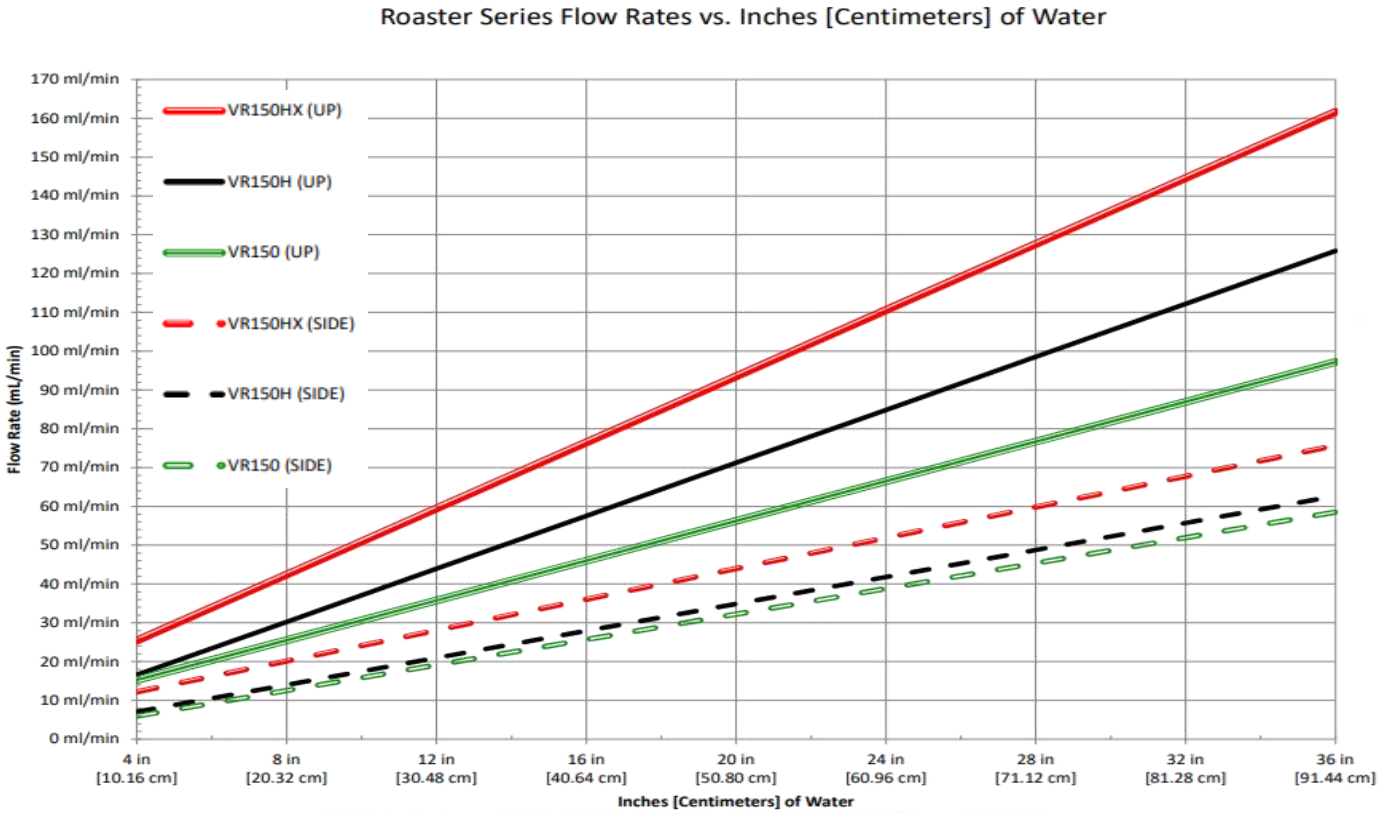

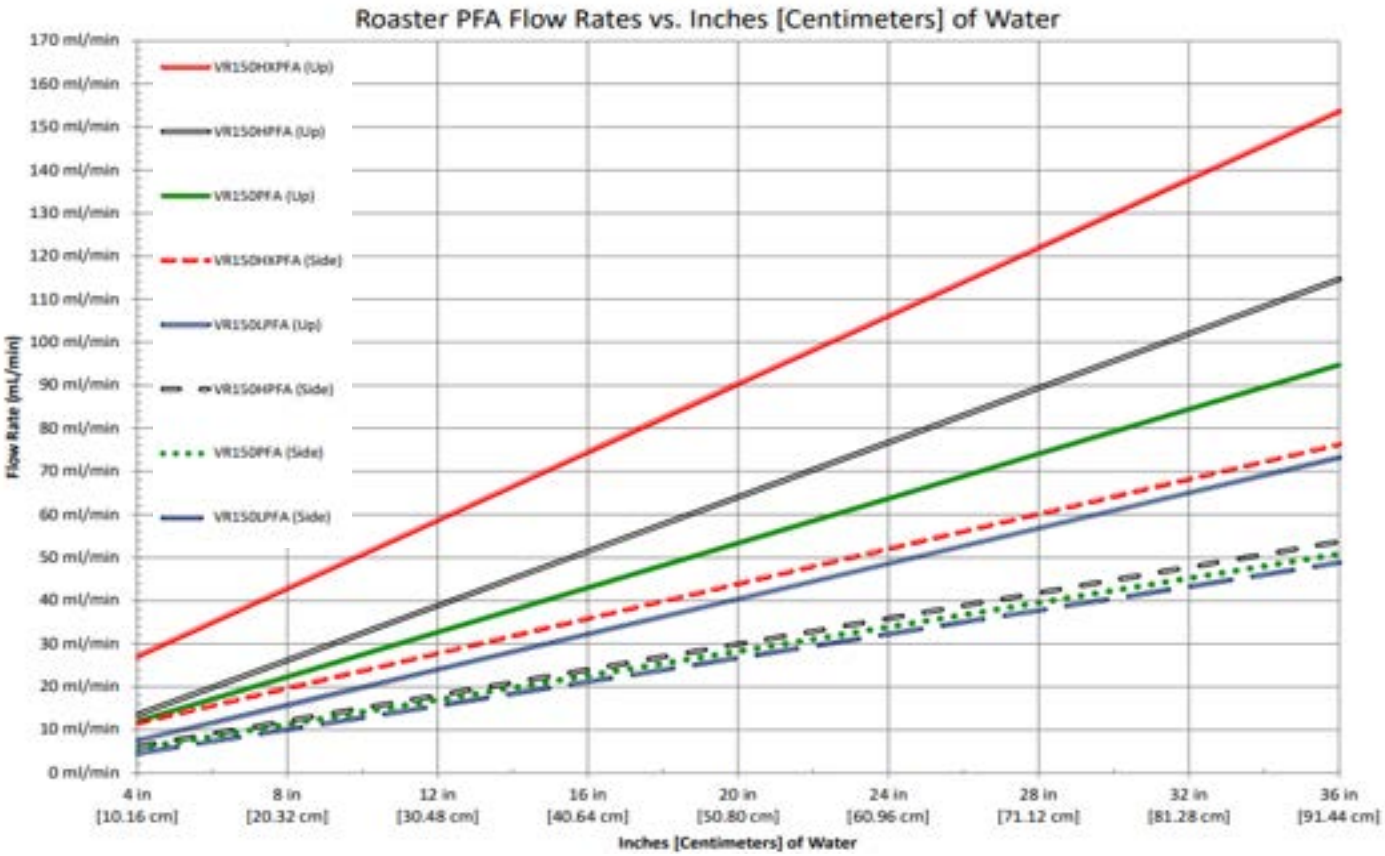

Toll-free: 1-800-99VALCO
Phone: (+1) 419-678-8731
Fax: (+1) 419-678-2200

WWW.VAL-CO.COM

LAYER WATERING OPTIONS

Drinkers

CATALOG #	ITEM DESCRIPTION	SHIP WEIGHT LBS.	SHIP WEIGHT KG.	LIST PRICE
VD150	Dummy Drinker	0.01	0.00	
VBL150	Layer Drinker	0.02	0.01	
VA150	Aqua-V Drinker	0.02	0.01	
VA150H	Aqua-V Drinker High Flow	0.02	0.01	
VA150PFA	Aqua-V Drinker High Flow PFA	0.02	0.01	
VA150HPFA	Aqua-V Drinker High Flow PFA	0.02	0.01	
VR150	Roaster Drinker	0.02	0.01	
VR150H	Roaster Drinker High Flow	0.02	0.01	
VR150PFA	Roaster Drinker	0.02	0.01	
VR150HPFA	Roaster Drinker High Flow	0.02	0.01	

Box Quantity is 2000

Drinker Repair Parts

VAL-TOOL	Drinker Tool - New Style Universal	0.03	0.01	
VO140	O-Ring For Val Drinker Drinkers	0.00	0.00	
VS146	Saddle Standard (Replaces VS146C)	0.01	0.00	
VS146-Q500	Saddle Standard (Replaces VS146C) - Box of 500	5.60	2.54	

Miscellaneous Parts

VB130	Plastic Cage Bracket	0.02	0.01	
VS143	Pipe Support Bracket - Plastic With Clip	0.04	0.02	
VS144	3" Pipe Support Wire	0.07	0.03	
VS145	2" Pipe Support Wire	0.06	0.03	
VC147	Cage Clip	0.01	0.00	
VC149	Large Cage Clip	0.01	0.00	

Replacement Standpipe Parts

820295	Direct replacement standpipe TruSeal cap for flexible standpipes	0.05	0.02	
820611	Direct replacement standpipe TruSeal cap for rigid standpipes	0.06	0.03	
820348	TruSeal rigid standpipe kit. Includes cap and float ball	0.06	0.03	
820349	TruSeal flex standpipe kit. Includes cap and float ball	0.06	0.03	
VC025TS	TruSeal flex cap kit includes cap and glue on adapter	0.06	0.03	
VS130	Spring for 18" flex standpipe when using TruSeal Cap	0.17	0.07	
VS132	Spring for 24" flex standpipe when using TruSeal Cap	0.23	0.10	
VS133	Spring for 30" flex standpipe when using TruSeal Cap	0.28	0.13	
VS134	Spring for 36" flex standpipe when using TruSeal Cap	0.34	0.15	
VSP12RA	RIGID SP ASSY, 12", 1/2" NPT	0.15	0.07	
VSP18RA	RIGID SP ASSY, 18", 1/2" NPT	0.26	0.12	
VSP24RA	RIGID SP ASSY, 24", 1/2" NPT	0.30	0.14	
VSP30RA	RIGID SP ASSY, 30", 1/2" NPT	0.27	0.12	
VSP36RA	RIGID SP ASSY, 36", 1/2" NPT	0.32	0.14	
VSP24FY	FLEX SP ASSY, 24", Repalcement *[Flex Tube & Trueseal]*	0.11	0.05	

Toll-free: 1-800-99VALCO
Phone: (+1) 419-678-8731
Fax: (+1) 419-678-2200

WWW.VAL-CO.COM

LAYER WATERING OPTIONS

COMPETITOR CHANGEOVER & REPLACEMENT ITEMS

CATALOG #	ITEM DESCRIPTION	SHIP WEIGHT LBS.	SHIP WEIGHT KG.	LIST PRICE
VZA150	Val Ziggity Saddle Kit Note: This kit includes a replacement adapter (with new O-ring) to replace the Ziggity twin style drinker. This adapter will accept any Val standard J-lock drinker. This retro-fit saddle locks into the Ziggity twin lock saddle, then the Val J-lock can be installed into the adapter. With this kit there is no need to replace the pipe or suspension/winching hardware. The Drinker is not included and must be ordered separately.	0.01	0.00	
820056	Val Ziggity Adapter Seal *Note: Replacement seal for Val Ziggity Saddle Kit*	0.00	0.00	
VS205	Glued Saddle for Small Square Pipe - For Threaded Drinker - 1/4" (6.35mm) Stem	0.01	0.01	
VS205L	Glued Saddle for Small Square Pipe - For Threaded Drinker - 11/32" (8.73mm) Stem	0.01	0.00	
VS405	Glued Saddle for Large Square Pipe - For Threaded Drinker - 1/4" (6.35mm) Stem	0.01	0.00	
VS405L	Glued Saddle for Large Square Pipe - For Threaded Drinker - 11/32" (8-73mm) Stem	0.01	0.00	
	Note: VS205L & VS405L are replacement saddles for square pipe that previously had threaded drinkers; the stem is slightly larger than the standard glued saddle so it can be glued into the existing threaded hole.			
VL150THD	Layer Drinker - Threaded Note: This drinker is a replacement for Lubing or any European style threaded drinker. The internal components of this drinker are the same as a standard Val Drinker. An advantage of this drinker is that after the drinker has been threaded into the pipe the internal components can be removed from the drinker without removing the unit from the pipe.	0.02	0.01	
VR150THD	Roaster Drinker Threaded	0.02	0.01	
VR150PFATHD	PFA Drinker Threaded	0.03	0.01	
VR150ZS	Roaster Drinker with Ziggity Short Plug	0.02	0.01	

Minimum Order of 2000 Drinkers. Use QE- Numbers for order quantities less then 2000 Drinkers

Toll-free: 1-800-99VALCO
Phone: (+1) 419-678-8731
Fax: (+1) 419-678-2200

LAYER WATERING OPTIONS

PVC PIPE & CONNECTORS

NOTE: Call for order info, pricing and availability of pipe only (PVC pipe with glued saddles)

CATALOG #	ITEM DESCRIPTION	SHIP WEIGHT LBS.	SHIP WEIGHT KG.	LIST PRICE
VC100	PVC Pipe Cutter (1 1/4" Max Diameter)	1.05	0.48	
730415	PVC Cement Glue (1/2 Pint)	1.00	0.45	
VG124	PVC Cement Glue (Pint)	1.14	0.52	
VG125-QT	PVC Cement Glue (Quart)	2.00	0.91	
VC210	PVC Cleaner (1/2 Pint)	0.55	0.25	
VP001	10' X 3/4" Plain PVC Pipe	1.20	0.54	
VP008	8' X 3/4" Plain PVC Pipe	0.93	0.42	
VC145	3/4" Coupler W/ O-Ring	0.06	0.03	
VS146	Standard Saddle	0.01	0.00	
VS146-Q500	Standard Saddle - Box of 500	5.60	2.54	
VL145	45 Degree Saddle - Open Face	0.02	0.01	
VL155	45 Degree Saddle - Closed Face	0.02	0.01	
VP001SQ	10' .875" Small Square PVC Pipe	1.92	0.87	
VC143	Square-to-Round Connector (small square pipe)	0.02	0.01	
820271	Square-to-Square Flex Connector Assembly (small square pipe)	0.06	0.03	
VS205	Saddle for Small Square Pipe - 1/4" (6.3mm) Stem	0.01	0.01	
VS205L	Saddle for Small Square Pipe (Threaded Drinker) - 11/32" (8.7mm) Stem	0.01	0.00	
VP002SQ	10' x 1.1" Large Square PVC Pipe	1.81	0.82	
VC243	Square-to-Round Connector (large square pipe)	0.02	0.01	
820270	Square-to-Square Flex Connector Assembly (Large square pipe)	0.07	0.03	
VS405	Saddle for Large Square Pipe - 1/4" (6.3mm) Stem	0.01	0.00	
VS405L	Saddle for Large Square Pipe (Threaded Drinker)- 11/32" (8.7mm) Stem	0.01	0.00	
VT194	1 1/2" PVC Pipe (10')	3.35	1.52	

PVC FITTINGS

VC146	3/4" PVC Coupling SXS	0.30	0.14	
VC148	3/4" PVC Cross SXSXSXS	0.01	0.00	
VC400	3/4" PVC Cap	0.04	0.02	
VT100	3/4" PVC Tee SXSXS	0.01	0.00	
VT101	3/4" PVC Tee SXSX 1/2" Thread	0.09	0.04	
VT102	3/4" PVC 90 Ell SXS	0.07	0.03	
VT106	3/4" Female Slip X 1/2" FPT PVC Reducer	0.05	0.02	
VT107	3/4" Male Slip X 1/2" FPT Bushing	0.03	0.01	
VT130	3/4" PVC Tee SXSX Thread	0.01	0.00	
VT131	3/4" PVC Male Adapter SX Thread	0.04	0.02	
VT132	3/4" PVC Female Adapter SX Thread	0.05	0.02	
VT133	3/4" PVC 90 ELL SX Thread	0.04	0.02	
VT134	3/4" PVC 90 ELL SX 1/2" Thread	0.07	0.03	
VT135	3/4" PVC 90 Degree ELL SX 1/2" S	0.01	0.00	
VT141	1" PVC Male Adapter Thread X 3/4" S	0.01	0.00	
VT188	1/2" PVC Male Adapter 1/2" Slip X 1/2" Thread	0.03	0.02	
VT189	3/4" PVC Bushing SX 1/2" S Reducer	0.02	0.01	
VT190	1/2" PVC Tee SXSXS	0.00	0.00	
VT191	1/2" Coupling SXS	0.03	0.01	
VT192	1/2" PVC 90N ELL SXS	1.42	0.64	
VT195	1 1/2" X 3/4" Bushing SXS	0.12	0.05	
VT196	1 1/2" PVC Cross DWV Fitting	7.16	3.25	
VT197	1/2" Union SXS	0.01	0.00	
VT198	1 1/2" PVC Coupler	0.16	0.07	
VT199	1 1/2" PVC Tee	0.16	0.07	
VT200	1 1/2" 90 Degree PVC ELL	0.28	0.13	
VT201	3/4" X 3/4" X 1/2" Tee SXSXS	0.10	0.05	
VT202	Bushing 1-1/2" X 1/2" THD.	0.10	0.04	
VT203	Bushing 1-1/2" X 1/2" S	0.00	0.00	
VT204	Socket 1-1/2" X 1-1/2" Barbed	0.14	0.06	
VT205	PVC Tube Plug	0.03	0.01	
VX127	3/4" UNION S X S	0.16	0.07	

VR-201
V-MAX REGULATOR

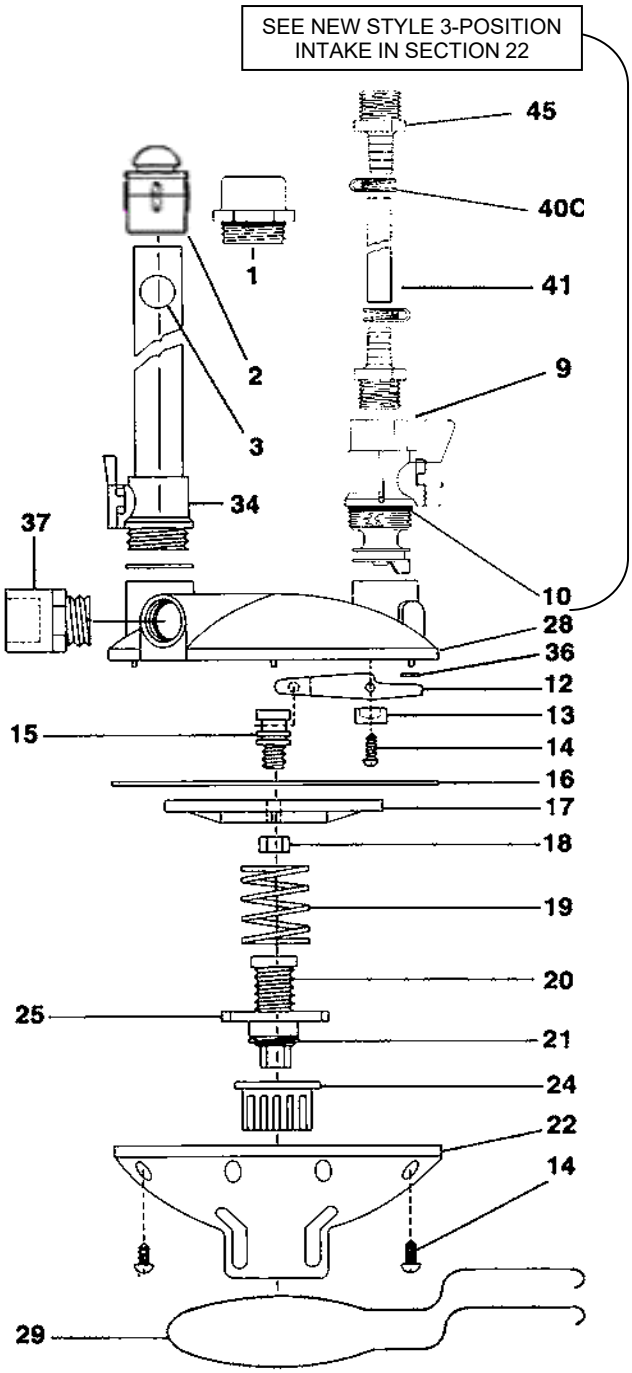

KEY	PART #	DESCRIPTION
1	VRP38	Regulator Plug
2	820611	Rigid TruSeal
3	VRP03	Standpipe Ball
9	VRP09	1/2" NPT Intake With Shutoff
	VRP09L	Low Pressure 1/2" NPT Intake W/Shutoff
10	VO145	O-Ring (Coupler)
12	VRP12G	Pivot
13	VRP13	Pivot Screw (2)
14	VRP14	Screw - Pivot Brkt (2) - Housing (9)
15	VRP15	Diaphragm Bolt
16	VRP16	Diaphragm
17	VRP52	Diaphragm Plate
18	VRP18	Diaphragm Nut
19	VRP19	Spring
20	VRP20	Adjustment Bolt
21	VRP21	Adjustment Bolt Pin
22	VRP22	Bottom Housing
24	VRP24	Adjustment Knob
25	VRP25	Adjustment collar
28	VRP28	Top Housing
29	VRP29	Optional Mounting Bracket
34		Standpipe (see page 24-04)
36	VRP36G	Seal
37	VT131	3/4" Male Adapter
40	VF204C	3/8" Hose Clamp
41	VRP48	PVC Yellow Reinforced Hose 3/8" 200 PSI
45	VRP45	1/2" Threaded Male Barb Hose Connector

VR-204
V-MAX REGULATOR

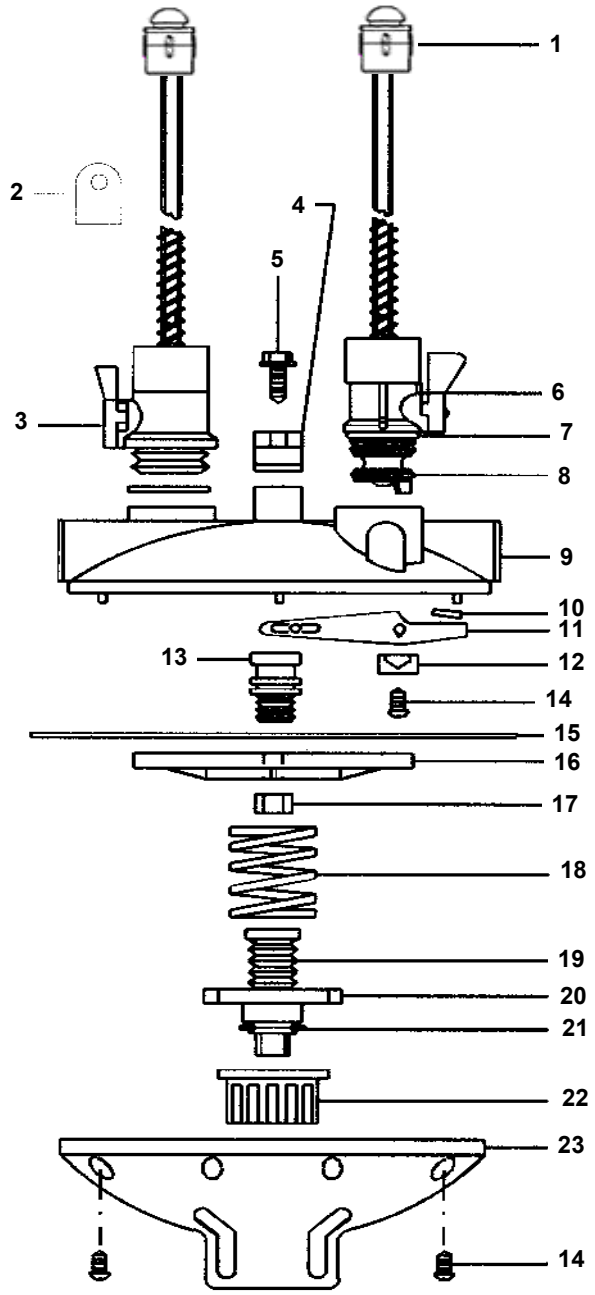

KEY	PART #	DESCRIPTION
1	820295	TruSeal Cap for Flex Standpipe
2	VRP42	(2) Mounting Brackets for Aluminum Extrusion
3		Standpipe - See page 22-04
4	VRP06	Pipe Clamp
5	VRP05-1	Screws for Pipe Clamp & Filter Bracket
6		Standpipe - See page 22-04
7	VO145	O-Ring for 3/4" Couplings
8	VRP31	O-Ring Seal
9	VRP32	Top Housing
10	VRP36G	Rubber Wafer Replacement
11	VRP12G	Pivot
12	VRP13	Pivot Brackets (Multiples of 2)
13	VRP15	Diaphragm Bolt
14	VRP14	Screw - 2 for Pivot Bracket or 9 for Bottom Housing
15	VRP16	Diaphragm
16	VRP52	Diaphragm Plate
17	VRP18	Diaphragm Nut
18	VRP19	Spring
19	VRP20	Adjustment Bolt
20	VRP25	Adjustment Collar
21	VRP21	Adjustment Bolt Pin
22	VRP24	Adjustment Knob
23	VRP22	Bottom Housing

Toll-free: 1-800-99VALCO
Phone: (+1) 419-678-8731
Fax: (+1) 419-678-2200

VR-205
V-MAX REGULATOR

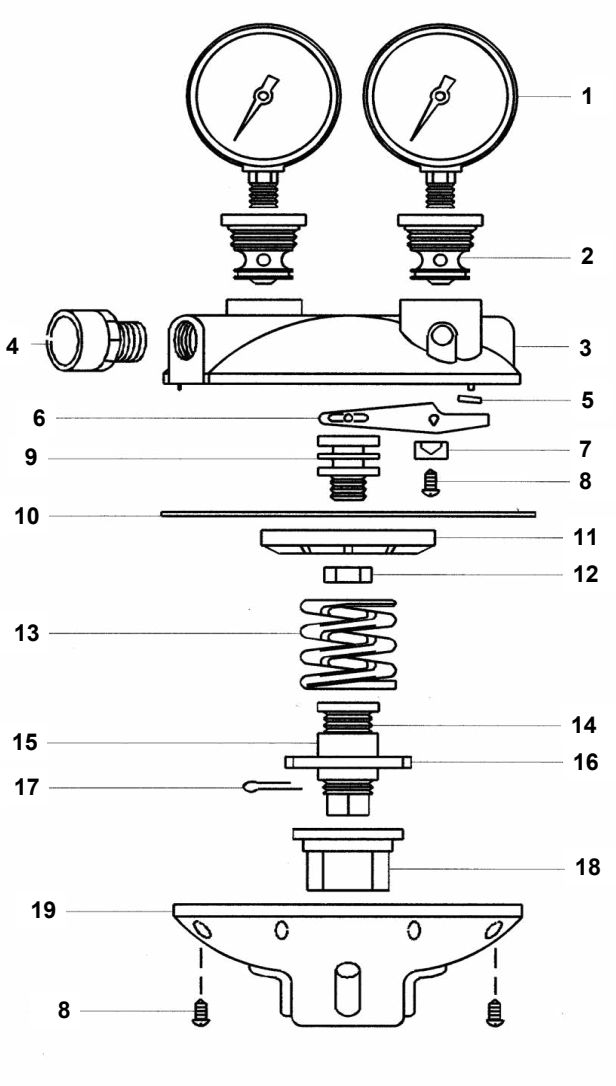

KEY	PART #	
1	VG100	Oil Filled Pressure Gauge (0-100 PSI)
2	VRP57	Gauge Intake
3	VRP58	Top Housing
4	VT131	3/4" PVC Male Adapter SX thread
5	VRP36G	Rubber Wafer Replacement
6	VRP12G	Pivot - New Style
7	VRP13	Pivot Brackets
8	VRP14	Screw - 2 for Pivot Bracket or 9 for Bottom Housing
9	VRP15	Diaphragm Bolt
10	VRP51	Diaphragm
11	VRP52	Diaphragm Plate
12	VRP18	Diaphragm Nut
13	VRP53	Spring
14	VRP20	Adjustment Bolt Pin
15	VRP50	Diaphragm Spacer
	820224	Diaphragm 1/2 Spacer
16	VRP25	Adjustment Collar
17	VRP21	Adjustment Bolt Pin
18	VRP55	Adjustment Knob
19	VRP54	Bottom Housing

VR209 REGULATOR REPAIRS

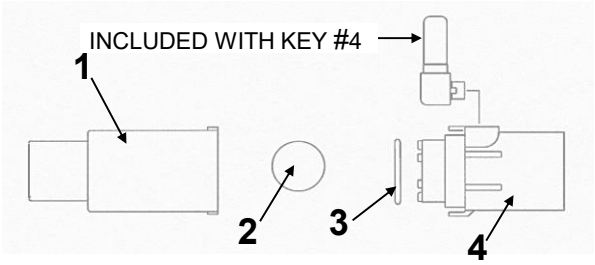

KEY	PART #	ITEM DESCRIPTION	List Price
1	VRP90	Left Housing with Stainless Steel Seat (SS Ball NOT Included) *Note: This part may be used in place of Left Housing & Plunger on* *Note: VR208 Regulator to convert to New Style VR209 Regulator.*	
2	VRP94	Stainless Steel Ball Only - 18mm 440CSS, Grade 25	
3	VO145	O-Ring for 3/4" Couplings	
4	VRP78	Right Housing with O-ring	

Toll-free: 1-800-99VALCO
Phone: (+1) 419-678-8731
Fax: (+1) 419-678-2200

WWW.VAL-CO.COM

REGULATOR REPAIRS

NUMERICAL LIST OF REGULATOR REPAIRS

CATALOG #	ITEM DESCRIPTION	SHIP WEIGHT LBS.	SHIP WEIGHT KGS.	LIST PRICE
820295	Auto Shutoff Cap for Flex Standpipe	0.05	0.02	
820611	Auto Shutoff Cap for Rigid Standpipe	0.06	0.03	
820334	Auto Shutoff Cap Replacement Seal for Flex Standpipe	0.00	0.00	
820335	Auto Shutoff Cap Replacement Seal for Rigid Standpipe	0.00	0.00	
PMHC3/4	3/4" Hose Clamp (2 req'd)	0.04	0.01	
PMTT6	7.5" Wire Tie	0.00	0.01	
RFV150	Flushing Intake Housing	0.18	0.08	
RFV151	Flushing Intake Cap	0.05	0.02	
RFV152	Flushing Intake Handle	0.04	0.02	
RFV153L	Flushing Intake Shaft Low Pressure	0.12	0.05	
RFV153S	Flushing Intake Shaft High Pressure	0.12	0.05	
RFV154	(2) Large O-Ring for RFV153	0.00	0.00	
RFV155	(2) Small O-Ring for RFV153	0.00	0.00	
RFV160	3-Position Intake	0.41	0.18	
RFV160L	3-Position Intake (Low Pressure)	0.41	0.18	
VF204C	Hose Clamp for 3/8" Urethane	0.01	0.01	
VG100	Oil Filled Pressure Gauge (0-100 PSI)	0.50	0.23	
VO145	O-Ring for 3/4" Couplings	0.00	0.00	
VO145S	O-Ring for RFV150	0.00	0.00	
VR202RK	Rebuild Kit for VR 202	1.17	0.53	
VRP03	5/8" Blue Rigid Standpipe Ball	0.01	0.00	
VRP03F	5/16 Blue Flex Standpipe Ball	0.00	0.00	
VRP05-1	Screws for Pipe Clamp & Filter Bracket	0.01	0.00	
VRP06	Pipe Clamp	0.06	0.03	
VRP09	1/2" NPT Intake With Shutoff	0.13	0.06	
VRP09L	1/2" NPT Low Press Intake With S/O	0.09	0.04	
VRP11	Top Housing - VR202 Regulator	0.50	0.23	
VRP119	O-Ring for Bottom of RVH114	0.00	0.00	
VRP12G	Pivot - New Style	0.03	0.01	
VRP13	Pivot Brackets (Multiples of 2)	0.00	0.00	
VRP14	Screw - 2 for Bracket or 9 for Bottom Housing	0.00	0.00	
VRP15	Diaphragm Bolt	0.02	0.01	
VRP16	Diaphragm	0.12	0.06	
VRP18	Diaphragm Nut	0.03	0.01	
VRP19	Spring	0.05	0.02	
VRP20	Adjustment Bolt Pin	0.03	0.01	
VRP21	Adjustment Bolt Pin	0.00	0.00	
VRP22	Bottom Housing	0.47	0.21	
VRP23	Top Housing - VR203 Regulator	0.60	0.27	
VRP24	Adjustment Knob	0.07	0.03	
VRP25	Adjustment Collar	0.03	0.01	

LISTING CONTINUED ON NEXT PAGE

Toll-free: 1-800-99VALCO
Phone: (+1) 419-678-8731
Fax: (+1) 419-678-2200

WWW.VAL-CO.COM

REGULATOR REPAIRS

NUMERICAL LIST OF REGULATOR REPAIRS

CATALOG #	ITEM DESCRIPTION	SHIP WEIGHT LBS.	SHIP WEIGHT KGS.	LIST PRICE
VRP28	Top Housing - VR201 Regulator	0.54	0.25	
VRP29	Regulator Mounting Bracket to Cage	0.39	0.18	
VRP30F	Intake With Shutoff (Flex)	0.12	0.05	
VRP31	O-Ring Seal - .867" ID	0.00	0.00	
VRP32	Top Housing - VR204 Regulator	0.55	0.25	
VRP38	Regulator Plug	0.04	0.02	
VRP36G	Rubber Wafer Replacement	0.00	0.00	
VRP42	Set of 2 Mounting Brackets for Aluminum Extrusion	0.01	0.00	
VRP45	1/2" Threaded Male Hose Connector (3/8" Barb)	0.01	0.00	
VRP48	PVC Yellow Reinforced Hose 3/8" 200 PSI (Drop Hose)	0.08	0.04	
VRP50	Diaphragm Spacer	0.01	0.01	
VRP51	Diaphragm	0.15	0.07	
VRP52	Diaphragm Plate	0.09	0.04	
VRP53	Spring	0.31	0.14	
VRP54	Bottom Housing	0.45	0.20	
VRP55	Adjustment Knob	0.07	0.03	
VRP57	Gauge Intake	0.04	0.02	
VRP58	Top Housing - VR205 Regulator	0.53	0.24	
VRP66	3/4" Barbed x 1/2" Male NPT Straight Fitting	0.04	0.02	
VRP67	3/4" Barbed Elbow x Female 3/4" NPT	0.06	0.03	
VRP67S	3/4" Barb x Female 3/4" NPT	0.05	0.02	
VRP68	3/4" Barbed Y Connector	0.05	0.02	
VRP76	3/4" Close Nipple Plastic	0.03	0.01	
VRP79	3/4" ID Yellow Hose - Per Foot	0.18	0.08	
VRP90	Left Housing With Stainless Steel Ball	0.11	0.05	
VRP94	Stainless Steel Ball Only - 18MM 440CSS, Grade 25	0.05	0.02	
VS130	Spring for 18" Flex Standpipe	0.17	0.07	
VS132	Spring for 24" Flex Standpipes	0.23	0.10	
VS133	Spring for 30" Flex Standpipes	0.28	0.13	
VS134	Spring for 36" Flex Standpipes	0.34	0.15	
VSC250	Body Only for VC025	0.00	0.00	
VSC251	Cap Only for VC025	0.00	0.00	
820335	Seal for VC025	0.00	0.00	
VSC750	Body Only for VC075	0.01	0.00	
VSC751	Cap Only for VC075	0.01	0.01	
820334	Seal for VC075	0.00	0.00	
VT131	3/4" PVC Male Adapter SX Thread	0.04	0.02	

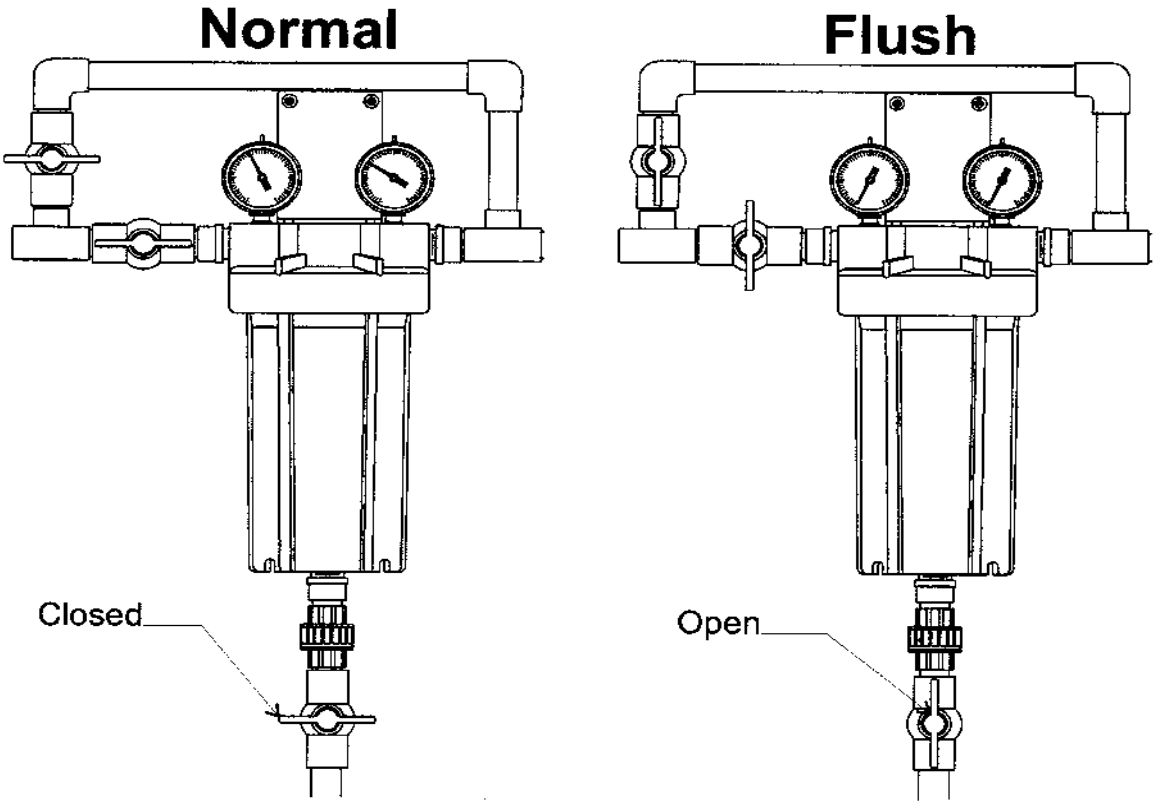

CATALOG NUMBER	ITEM DESCRIPTION	LIST PRICE
VF123	Bottom Housing for VF121 and VF122	
VF125	O-Ring for VF120 Filter Kit	
VF126	O-Ring for VF121 and VF122 Filter Kit	
VF128	Filter Bracket (Aluminum)	
VF129	Lid for Filter	
VG100	Oil Filled Pressure Gauge (0-100 PSI)	
VG100L	Oil Filled Pressure Gauge (0-15 PSI)	
VM121-10	Reusable Filter Cartridge for VF121/VF122 (10 Micron) - Blue Dot	
VM121-30	Reusable Filter Cartridge for VF121/VF122 (30 Micron) - Black Dot	
VM121-50	Reusable Filter Cartridge for VF121/VF122 (50 Micron) - Red Dot	
VT131	3/4" PVC Male Adapter S X Thread	
VT141	1" PVC Male Adapter 1" Thread X 3/4" S	
VX127	3/4" Union S X S	

SECTION 25
START-GROW WATERING PRICING

IN THIS CATALOG SECTION

PAGE NUMBER	CONTENTS
25-02	Regulators
25-03	Intakes / Hose / End Assemblies / Flush Kits
25-04	Standpipes
25-05	Header Kits / Lead In Kits / Air Releases
25-06	Filter Kits / Water Meters / Medicators / Cleaner & Solutions
25-07	Start Grow Pipe Kits
25-08	Winching
24-09 thru 24-10	Drinker Flow Charts
25-11	Drinkers / Standpipe replacement Parts
25-12	Pipe & Connectors / PVC Fittings
25-13	VR201 Regulator
25-14	VR204 Regulator
25-15	VR205 Regulator / VR209 Regulator
24-16thru 24-17	Regulator Repair Parts Pricing
25-18	Filter Kit Repair Parts

Toll-free: 1-800-99VALCO
Phone: (+1) 419-678-8731
Fax: (+1) 419-678-2200

WWW.VAL-CO.COM

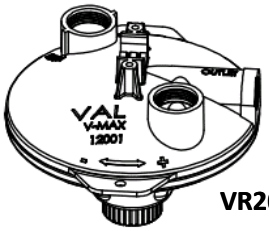

VR201

REGULATORS

V-MAX Regulator Ordering Instructions

1. **Order the regulator.**
2. **Order desired bracket**
3. **Order the desired intake.**
4. **Order the desired standpipe.**
5. **Order the intake hose.**

(3/4" for flush intake, 3/8" for old style intake.)

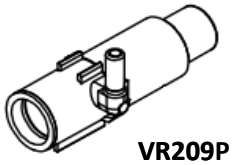

VR209P

V-MAX VR201 FLOOR REGULATOR KIT (requires 1 standpipe)

CATALOG #	ITEM DESCRIPTION	SHIP WEIGHT LBS.	SHIP WEIGHT KG.	LIST PRICE
VR201K	Cage Regulator Kit	1.85	0.84	

V-MAX VR201 FLOOR REGULATOR KIT

VRP29	Cage Regulator Support Bracket	0.39	0.18	
610067	Cage Regulator Support Bracket	1.25	0.57	

V-MAX VR204 SLOPE REGULATOR (req. 2 standpipe - 1 must be 'K' designation)

CATALOG #	ITEM DESCRIPTION	SHIP WEIGHT LBS.	SHIP WEIGHT KG.	LIST PRICE
VR204KA	Cage Slope Regulator Kit - Aluminum	1.87	0.00	
VR204KC	Cage Slope Regulator Kit - Conduit	1.85	0.00	

VR209 SLOPE REGULATOR

CATALOG #	ITEM DESCRIPTION	SHIP WEIGHT LBS.	SHIP WEIGHT KG.	LIST PRICE
VR211-18	Slope Regulator Kit With 18" Standpipe & Coupler (Conduit)	0.35	0.16	
VR211-24	Slope Regulator Kit With 24" Standpipe & Coupler (Conduit)	0.36	0.16	
VR211-30	Slope Regulator Kit With 30" Standpipe & Coupler (Conduit)	0.38	0.17	
VR209P	Slope Regulator Only - Automatic Flush Thru	0.18	0.08	
VR209S	Air Release with "L" Stem	0.11	0.05	
820513	Air Release with Side Exit Stem	0.10	0.05	
820515	Slope Regulator Only - with Side Exit Stem	0.17	0.08	
820516	Slope Regulator Only - with Side Stem Plug	0.17	0.08	
VRP90	Slope Regulator - Left Kit for VR209	0.11	0.05	

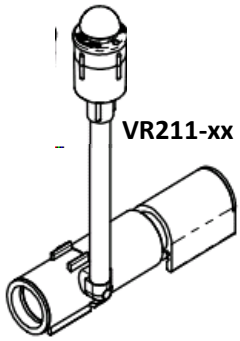

VR211-xx

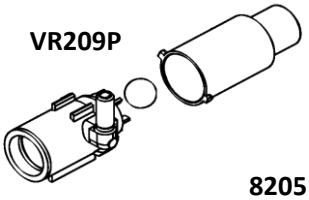

VR209P

820515
820513 (no SS Ball)

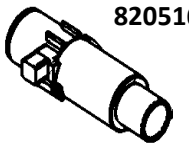

820516

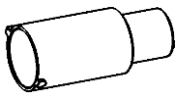

VRP90

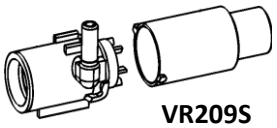

VR209S

VR205 HIGH PRESSURE REGULATOR

CATALOG #	ITEM DESCRIPTION	SHIP WEIGHT LBS.	SHIP WEIGHT KG.	LIST PRICE
VR205	High Pressure Regulator Kit - No Gauges	2.16	0.98	
VR205-1	High Pressure Regulator Kit - 1 Oil Filled Pressure Gauge	2.65	1.20	
VR205-2	High Pressure Regulator Kit - 2 Oil Filled Pressure Gauges	3.14	1.42	

Maximum Incoming Pressure: 100 PSI *Pressure Range: 25 PSI Minimum*

Toll-free: 1-800-99VALCO
Phone: (+1) 419-678-8731
Fax: (+1) 419-678-2200

WWW.VAL-CO.COM

INTAKE KITS

STANDARD

Incoming Pressure
15-40 PSI

Pressure Range
0-1.3 PSI or 0-36" Water Column

Note: Head of house regulator pressure not to be set below 25psi.

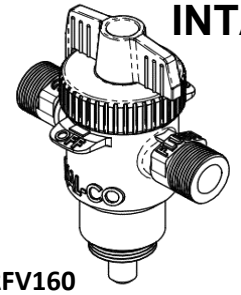

RFV160

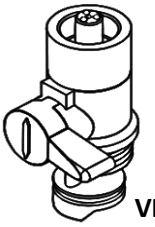

VRP30F

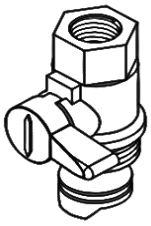

VRP09

LOW PRESSURE

Incoming Pressure
4-15 PSI

Pressure Range
0-1.3 PSI or 0-36" Water Column

INTAKE KITS

CATALOG #	ITEM DESCRIPTION	SHIP WEIGHT LBS.	SHIP WEIGHT KG.	LIST PRICE
RFV160K	Inlet Kit, Flushing, Shut Off (incl. (2) PMTT6, VRP66, VRP67S, (2) PMHC3-4)	0.62	0.28	
RFV160LK	Inlet Kit, Flushing, Shut off, Low pressure (incl. same parts as RFV160K)	0.66	0.30	
VRP09K	Inlet Kit, Shut off (incl, (2) VRP45 & (2) VRP375)	0.16	0.07	
VRP09LK	Inlet Kit, Shut off, low pressure (incl, (2) VRP45 & (2) VRP375)	0.16	0.07	

INDIVIDUAL INTAKE

RFV160	Regulator Flushing Intake only	0.41	0.18	
RFV160L	Regulator Flushing Intake only - Low Pressure	0.41	0.18	
VRP09	Shutoff Intake only	0.13	0.06	
VRP09L	Shutoff Intake only - Low Pressure	0.09	0.04	
VRP30F	Shutoff Intake with Flex Standpipe Connection	0.12	0.05	

HOSE

VRP79-Q300	PVC Yellow Regulator drop HOSE, ¾" ID (**Unit of measure: 300 Foot Roll**) For use with new style flush intake. (RFV160)	66.20	30.03	
VRP79	PVC Yellow Regulator drop HOSE, ¾" ID (**Unit of measure: Per foot**) For use with new style flush intake. (RFV160)	0.18	0.08	
VRP48-Q500	PVC Yellow Regulator Drop Hose, 3/8" (**Unit of measure: 500 Foot Roll**) For use with old style intake. (VRP09)	39.60	17.96	
VRP48	PVC Yellow Regulator Drop Hose, 3/8" (**Unit of measure: per foot**) For use with old style intake. (VRP09)	0.08	0.04	

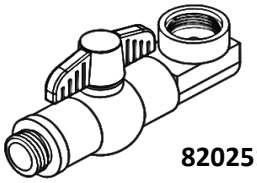

820251

END ASSEMBLIES (requires 1 standpipe)

CATALOG #	ITEM DESCRIPTION	SHIP WEIGHT LBS.	SHIP WEIGHT KG.	LIST PRICE
820251	End Assembly Kit, US standard thread, Garden Hose Adapter	0.37	0.17	
820252	End Assembly Kit, Metric thread, Garden Hose Adapter	0.39	0.18	

FLUSH KITS FOR CAGES

VF100B	With 12" Standpipe - Lower Tiers	10.28	4.66	
VF100T	With 12" Standpipe - Top Tier Only	2.36	1.1	
VF100TM	With 12" Standpipe - Top Tier Only (Metric)	2.34	1.06	
VF100-18B	With 18" Standpipe - Lower Tiers	10.40	4.72	
VF100-18T	With 18" Standpipe - Top Tier Only	2.48	1.1	
VF100-18TM	With 18" Standpipe - Top Tier Only (Metric)	2.45	1.11	
VF100-24B	With 24" Standpipe - Lower Tiers	3.60	1.63	
VF100-24T	With 24" Standpipe - Top Tier Only	2.15	1.0	
VF100-24TM	With 24" Standpipe - Top Tier Only (Metric)	2.57	1.17	
VF100SB	For Stacked Cages - With 24" Standpipe - Lower Tiers	8.00	3.63	
VF100SBM	For Stacked Cages - With 24" Standpipe - Lower Tiers (Metric)	2.35	1.07	

Toll-free: 1-800-99VALCO
Phone: (+1) 419-678-8731
Fax: (+1) 419-678-2200

WWW.VAL-CO.COM

FLEX STANDPIPE

CATALOG #	ITEM DESCRIPTION	SHIP WEIGHT LBS.	SHIP WEIGHT KG.	LIST PRICE
Foldover Standpipes				
VSP18FO	FLEX SP ASSY, 18", FOLD OVER	0.44	0.20	
VSP24FO	FLEX SP ASSY, 24", FOLD OVER	0.50	0.23	
VSP30FO	FLEX SP ASSY, 30", FOLD OVER	0.47	0.21	
Shutoff Standpipes				
VSP18FS	FLEX SP ASSY, 18", SHUTOFF	0.36	0.16	
VSP24FS	FLEX SP ASSY, 24", SHUTOFF	0.49	0.22	
VSP30FS	FLEX SP ASSY, 30", SHUTOFF	0.56	0.25	
1/2" NPT Standpipes				
VSP18FK	FLEX SP ASSY, 18", INTAKE	0.35	0.16	
VSP24FK	FLEX SP ASSY, 24", INTAKE	0.44	0.20	
VSP30FK	FLEX SP ASSY, 30", INTAKE	0.46	0.21	

RIGID STANDPIPE

CATALOG #	ITEM DESCRIPTION	SHIP WEIGHT LBS.	SHIP WEIGHT KG.	LIST PRICE
Foldover Standpipes				
VSP12RO	RIGID SP ASSY, 12", FOLD OVER	0.22	0.10	
VSP18RO	RIGID SP ASSY, 18", FOLD OVER	0.33	0.15	
VSP24RO	RIGID SP ASSY, 24", FOLD OVER	0.37	0.17	
VSP30RO	RIGID SP ASSY, 30", FOLD OVER	0.40	0.18	
VSP36RO	RIGID SP ASSY, 36", FOLD OVER	0.38	0.17	
Shutoff Standpipes				
VSP12RS	RIGID SP ASSY, 12", SHUTOFF	0.30	0.14	
VSP18RS	RIGID SP ASSY, 18", SHUTOFF	0.32	0.15	
VSP24RS	RIGID SP ASSY, 24", SHUTOFF	0.40	0.18	
VSP30RS	RIGID SP ASSY, 30", SHUTOFF	0.32	0.14	
VSP36RS	RIGID SP ASSY, 36", SHUTOFF	0.36	0.16	
1/2" NPT Standpipes				
VSP12RR	RIGID SP ASSY, 12", 1/2" NPT	0.24	0.11	
VSP18RR	RIGID SP ASSY, 18", 1/2" NPT	0.29	0.13	
VSP24RR	RIGID SP ASSY, 24", 1/2" NPT	0.41	0.19	
VSP30RR	RIGID SP ASSY, 30", 1/2" NPT	0.39	0.18	
VSP36RR	RIGID SP ASSY, 36", 1/2" NPT	0.44	0.20	
Intake Standpipes				
VSP12RK	RIGID SP ASSY, 12", INTAKE	0.21	0.10	
VSP18RK	RIGID SP ASSY, 18", INTAKE	0.25	0.11	
VSP24RK	RIGID SP ASSY, 24", INTAKE	0.29	0.13	
VSP30RK	RIGID SP ASSY, 30", INTAKE	0.33	0.15	
VSP36RK	RIGID SP ASSY, 36", INTAKE	0.37	0.17	

BRUSHES FOR STANDPIPES

VB151	Bottle Brush for Rigid Standpipe	0.11	0.05	
VB151F	Bottle Brush for Flex Standpipe	0.11	0.05	

Toll-free: 1-800-99VALCO
Phone: (+1) 419-678-8731
Fax: (+1) 419-678-2200

WWW.VAL-CO.COM

START-GROW WATERING OPTIONS

HEADER KITS

CATALOG #	ITEM DESCRIPTION	SHIP WEIGHT LBS.	SHIP WEIGHT KG.	LIST PRICE
VH100B	Cage Header Kit - Lower Tiers	1.88	0.85	
VH100T	Cage Header Kit - Top Tier Only	1.79	0.81	
VH100SB	Cage Header Kit - for Stacked Cage Lower Tiers	1.40	0.64	
VH100ST	Cage Header Kit - for Stacked Cage Top Tier Only	1.55	0.70	

LEAD-IN KITS

CATALOG #	ITEM DESCRIPTION	SHIP WEIGHT LBS.	SHIP WEIGHT KG.	LIST PRICE
VL100	Lead-In Kit From Filter to First Row	8.46	3.84	
VL200	Lead-In Kit From One Row to Next Row	4.03	1.83	

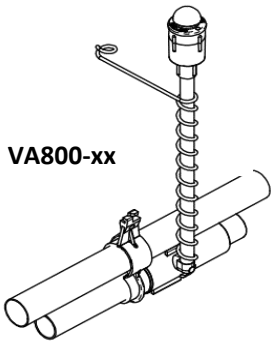

AIR RELEASES

CATALOG #	ITEM DESCRIPTION	SHIP WEIGHT LBS.	SHIP WEIGHT KG.	LIST PRICE
VA800-24	Air Release With Auto Shutoff & 24" Flex Standpipe - Conduit	0.71	0.32	
VA800-30	Air Release With Auto Shutoff & 30" Flex Standpipe - Conduit	0.74	0.33	
VR209S	Left Body Only - for Air Release & Slope Regulator	0.11	0.05	

VIEWPORT

CATALOG #	ITEM DESCRIPTION	SHIP WEIGHT LBS.	SHIP WEIGHT KG.	LIST PRICE
820624	Viewport - 3/4" Clear PVC with VC145 Coupler	0.12	0.05	

Toll-free: 1-800-99VALCO
Phone: (+1) 419-678-8731
Fax: (+1) 419-678-2200

WWW.VAL-CO.COM

START-GROW WATERING OPTIONS

FILTER KIT/BACKFLUSH

CATALOG #	ITEM DESCRIPTION	SHIP WEIGHT LBS.	SHIP WEIGHT KG.	LIST PRICE
VF122	Filter Kit/Backflush Hookup	9.25	4.20	
VF122L	Filter Kit/Backflush Hookup - Low Pressure	9.03	4.10	
VF122-H	Filter Kit - Without Hookup or Gauges(30 Micron Filter)	6.95	3.15	
VF122L-H	Filter Kit - W/O Hookup or Gauges - Low Pressure (50 Micron Filter)	6.74	3.06	

WATER METERS *(kits includes [2] VT132 -3/4" PVC female adapter S X thread)*

CATALOG #	ITEM DESCRIPTION	SHIP WEIGHT LBS.	SHIP WEIGHT KG.	LIST PRICE
820370	**WATER METER KIT**, GAL, LOCAL, 5/8"X3/4", Brass Body, Line Size 3/4"	8.00	3.63	
820371	**WATER METER KIT**, GAL, DIGITAL, 5/8"X3/4", Brass Body, Line Size 3/4"	8.00	3.63	
820372	**WATER METER KIT**, MET, LOCAL, 5/8"X3/4", Brass Body, Line Size 3/4"	8.00	3.63	
820373	**WATER METER KIT**, MET, DIGITAL, 5/8"X3/4", Brass Body, Line Size 3/4"	8.00	3.63	
820374	**WATER METER KIT**, GAL, LOCAL, 5/8" X 3/4", Plastic Body, Line Size 3/4"	8.00	3.63	
820375	**WATER METER KIT**, GAL, DIGITAL, 5/8" X 3/4", Plastic Body, Line Size 3/4"	3.10	1.41	
820376	**WATER METER KIT**, MET, LOCAL, 5/8" X 3/4", Plastic Body, Line Size 3/4"	2.85	1.29	
820377	**WATER METER KIT**, MET, DIGITAL, 5/8" X 3/4", Plastic Body, Line Size 3/4"	8.00	3.63	
820284	PVC Adapter, 1" X 3/4", slip x slip, schedule 40	0.10	0.05	
VT100	3/4" PVC Tee S X S X S	0.01	0.00	
VT102	3/4" PVC 90 ELL S X S	0.07	0.03	
VT132	3/4" PVC Female Adapter S X Thread	0.05	0.02	
VV801	3/4" Ball Valve	0.26	0.12	
VX127	3/4" Union S X S	0.16	0.07	

MEDICATOR

CATALOG #	ITEM DESCRIPTION	SHIP WEIGHT LBS.	SHIP WEIGHT KG.	LIST PRICE
VM501	Dosatron Medicator Kit (D25RE2) - Dilution Range 1:500 to 1:50 (.2% to 2%)	3.41	1.55	
820341	Dosatron Medicator Kit (D25RE5) - Dilution Range 1:100 to 1:20 (1% to 5%)	4.00	1.81	
VM507	Hook-Up Kit for Medicator	1.46	0.66	
VM504	Repair Kit for VM500 Dosatron Medicator (D25RE2)	44.00	19.96	

Medicators can be used in high or low pressure systems from 4.3-85 PSI (.3-5.86 Bar).

CLEANERS / SOLUTIONS

CATALOG #	ITEM DESCRIPTION	SHIP WEIGHT LBS.	SHIP WEIGHT KG.	LIST PRICE
PM10TS	10TS Water Treatment System	25.00	11.34	
PMCPABU1	Water Treatment Solution - 5 Gallon (PARAFOS)	50.00	22.68	

Toll-free: 1-800-99VALCO
Phone: (+1) 419-678-8731
Fax: (+1) 419-678-2200

WWW.VAL-CO.COM

START-GROW PIPE KITS

(Not Including Cord or PVC Edging - See Below)

ALL DRINKERS

CATALOG NUMBER	DRINKER SPACING	PIPE LENGTH	NO. OF DRINKERS	LIST PRICE
BG199	24"	8 FT	8	
BG200	24"	10 FT	10	
BG201	30"	10 FT	8	
BG202	32"	8 FT	6	
BG203	40"	10 FT	6	
BG204	48"	8 FT	4	
BG205	60"	10 FT	4	

CATALOG NUMBER*	*EXT. LIST PRICE
BG199E	
BG200E	
BG201E	
BG202E	
BG203E	
BG204E	
BG205E	

*** This price includes one extended start-grow per kit.**

To order, add "E" to the catalog number to identify.

CUPS & DRINKERS
(ALTERNATING EACH PARTITION; CUPS & NIPPLE DRINKERS)

CATALOG NUMBER	DRINKER SPACING	PIPE LENGTH	NO. OF DRINKERS	LIST PRICE
BG209	24"	8 FT	8	
BG210	24"	10 FT	10	
BG211	30"	10 FT	8	
BG212	32"	8 FT	6	
BG213	40"	10 FT	6	
BG214	48"	8 FT	4	
BG215	60"	10 FT	4	

ALL CUP DRINKERS

CATALOG NUMBER	DRINKER SPACING	PIPE LENGTH	NO. OF DRINKERS	LIST PRICE
BG199AC	24"	8 FT	8	
BG200AC	24"	10 FT	10	
BG201AC	30"	10 FT	8	
BG202AC	32"	8 FT	6	
BG203AC	40"	10 FT	6	
BG204AC	48"	8 FT	4	
BG205AC	60"	10 FT	4	
BG777	Cup Cover (for start-grow unit)			

LIST PRICE INCLUDES:

- Plastic Pipe in 8'/10' Lengths
- Stabilizer Coupler (VC145)
- Barbed Saddle (VS147)
- Cage Clips (VC147)
- Val Drinkers (VBL150)
- Tubing (BG222)
- Start-Grow Assembly (BG220)

AND/OR:

- Extended Start-Grow Assembly (BG219)

ALSO NEEDED

DIVIDE NUMBER OF DRINKERS BY TWO TO CALCULATE NUMBER OF STARTGROW ASSEMBLIES PER KIT

ONE 20" PER STARTGROW ASSY OR PARTITION FOR SINGLE PULL OR ONE 40" PER TWO ASSYS FOR DOUBLE PULL			TWO PER STARTGROW ASSEMBLY OR PARTITION		
CATALOG NUMBER	ITEM DESCRIPTION	LIST PRICE	CATALOG NUMBER	ITEM DESCRIPTION	LIST PRICE
BG221	20" DROP CORD		VN100	10.75" PVC EDGING	
BG223	20" CORD W/ HOOK		VN101	11.75" PVC EDGING	
BG225	40" DROP CORD		VN102	12.75" PVC EDGING	
BG227	40" CORD W/ HOOK				

CUSTOM & NON-STOCKED PIPE KITS

Custom pipe kits are available - call for availability. Note that orders for custom pipe kits (and some non-stocked kits shown above) may not be cancelled after production commences. No returns are permitted on custom or non-stocked pipe kits.

Toll-free: 1-800-99VALCO
Phone: (+1) 419-678-8731
Fax: (+1) 419-678-2200

WWW.VAL-CO.COM

PULLET CAGE WINCHING SYSTEM

WINCHING SYSTEM

CATALOG #	ITEM DESCRIPTION	SHIP WEIGHT LBS.	SHIP WEIGHT KG.	LIST PRICE
VW024	Winching System for 24" Cage Spacing - Per Cage	0.11	0.05	
VW030	Winching System for 30" Cage Spacing - Per Cage	0.12	0.06	

ABOVE WINCHING SYSTEMS INCLUDE:

CATALOG #	ITEM DESCRIPTION	SHIP WEIGHT LBS.	SHIP WEIGHT KG.	LIST PRICE
VW1	Winching Clamp (1 per cage)	0.01	0.00	
VW2	Winching Clamp Screw (1 per cage)	0.00	0.00	
VWB101	Winching Bracket for Startgrow Systems	0.04	0.02	
VW4	Winching Rod	0.03	0.01	

WINCHING KITS

CAN BE USED FOR HART, MONOFLOW, & ZIGGITY PULLET GROW SYSTEM

WINCHING KITS

CATALOG #	ITEM DESCRIPTION	SHIP WEIGHT LBS.	SHIP WEIGHT KG.	LIST PRICE
VW101	Winching Kit for Startgrow Cage Watering	22.20	10.07	

VW101 WINCHING SYSTEM INCLUDES:

Part Number	Qty	ITEM DESCRIPTION	SHIP WEIGHT LBS.	SHIP WEIGHT KG.	EXTENDED LIST PRICE
VB312	2	2000 lb. overhead manual winch	10.50	4.76	
VC343	16	Cable, 1/8", 7x7 galvanized	0.03	0.01	
VC354	10	Cable clamp	0.03	0.01	
780017	2	Return Spring	1.70	0.77	
615321	2	PVC Spring Cover - 2' PVC Pipe (1 per winch)	0.65	0.29	
VT194	0.4	1 1/2" Plain PVC Pipe (10 FT.)	3.35	1.52	

WINCHING KITS

CATALOG #	ITEM DESCRIPTION	SHIP WEIGHT LBS.	SHIP WEIGHT KG.	LIST PRICE
VW101-B	Winching Kit for Startgrow Cage Watering	11.69	5.30	

VW101-B WINCHING SYSTEM INCLUDES:

Part Number	Qty	ITEM DESCRIPTION	SHIP WEIGHT LBS.	SHIP WEIGHT KG.	EXTENDED LIST PRICE
VB312	1	2000 lb. overhead manual winch	10.50	4.76	
VC343	16	Cable, 1/8", 7x7 galvanized	0.03	0.01	
VC354	12	Cable clamp	0.03	0.01	
780017	2	Return Spring	1.70	0.77	
615321	2	PVC Spring Cover - 2' PVC Pipe (1 per winch)	0.65	0.29	
VT194	0.4	1 1/2" Plain PVC Pipe (10 FT.)	3.35	1.52	

Note: Winches to be mounted to rigid surface. (Not supplied with kits.)

Toll-free: 1-800-99VALCO
Phone: (+1) 419-678-8731
Fax: (+1) 419-678-2200

Drinker Options - Flow Rates

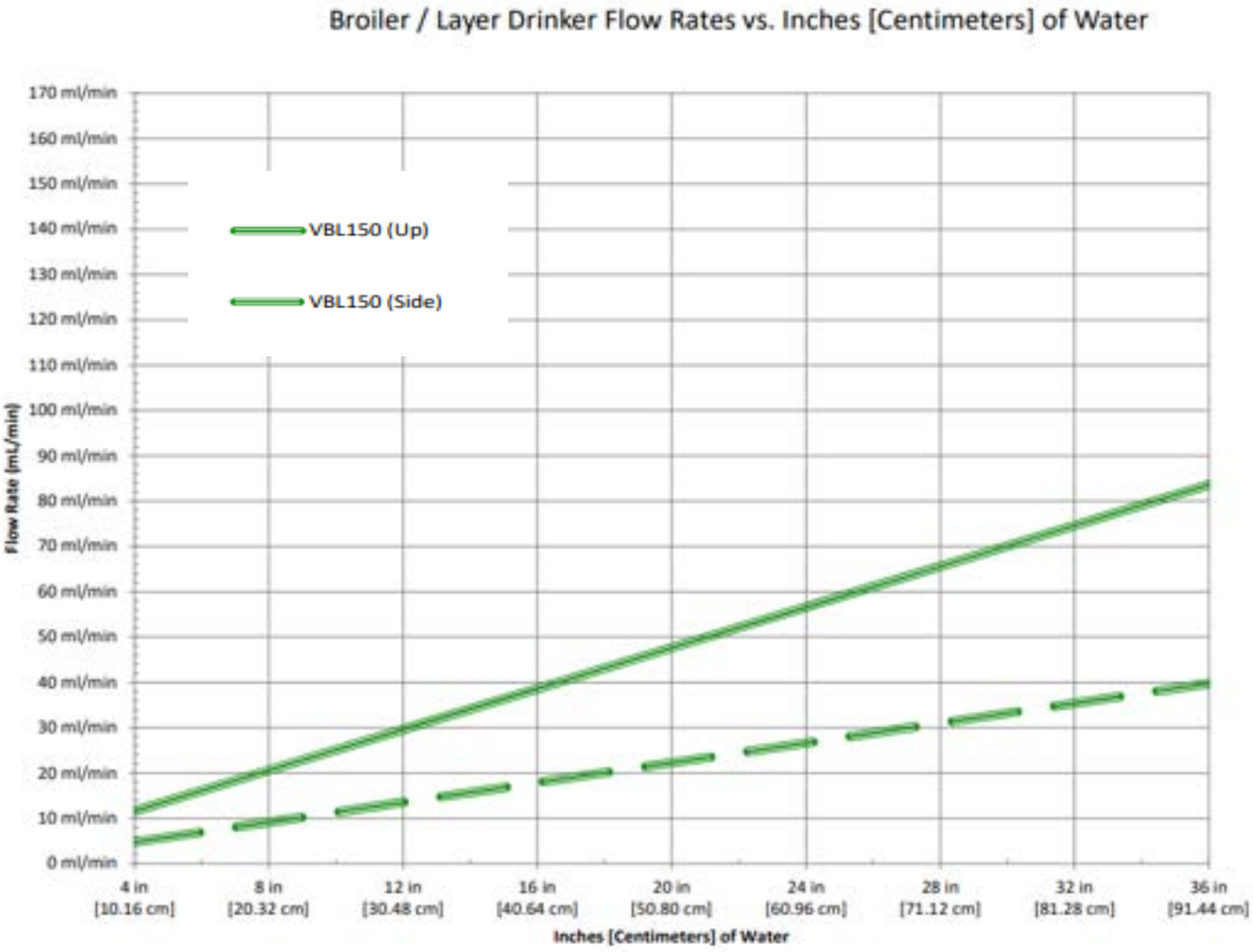

Toll-free: 1-800-99VALCO
Phone: (+1) 419-678-8731
Fax: (+1) 419-678-2200

Drinker Options - Flow Rates

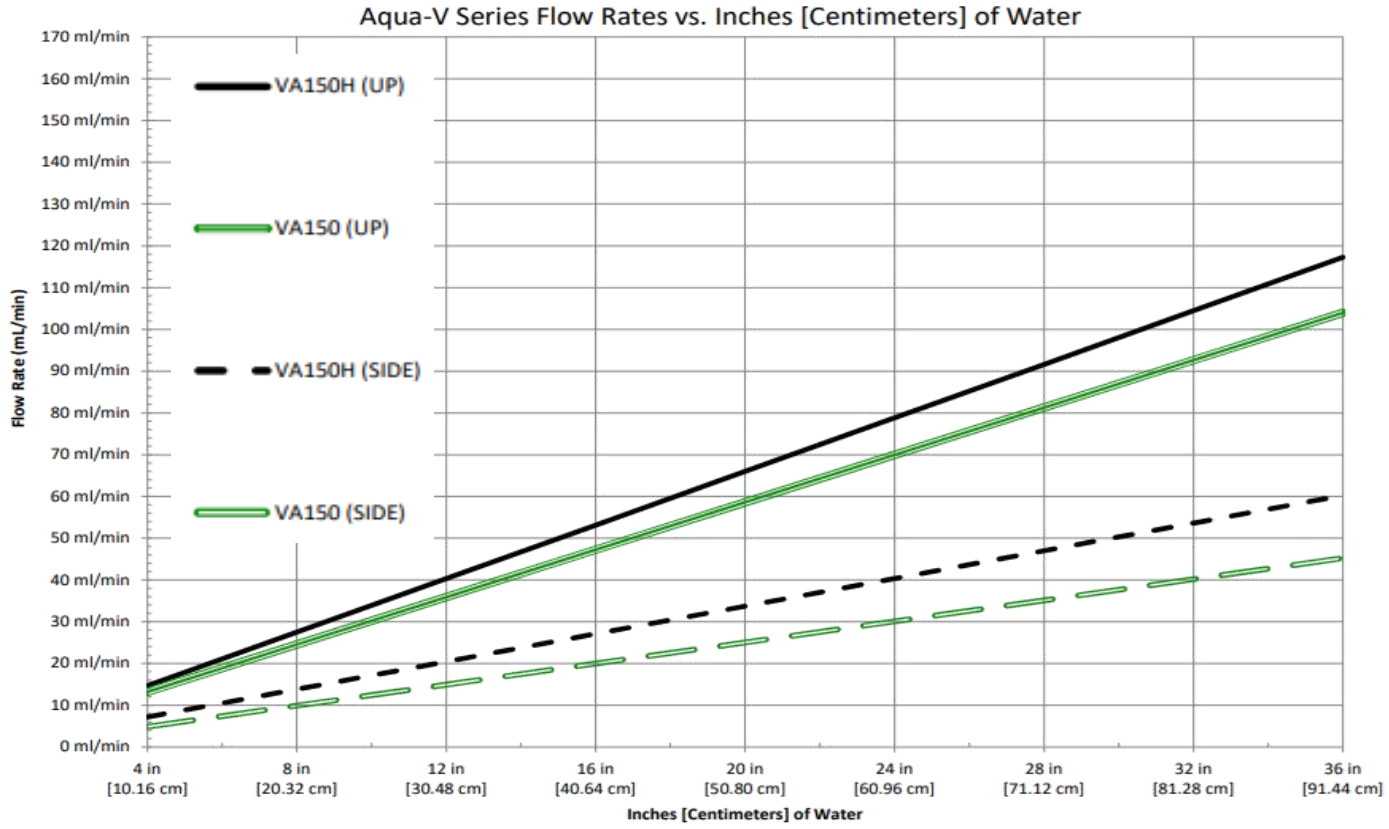

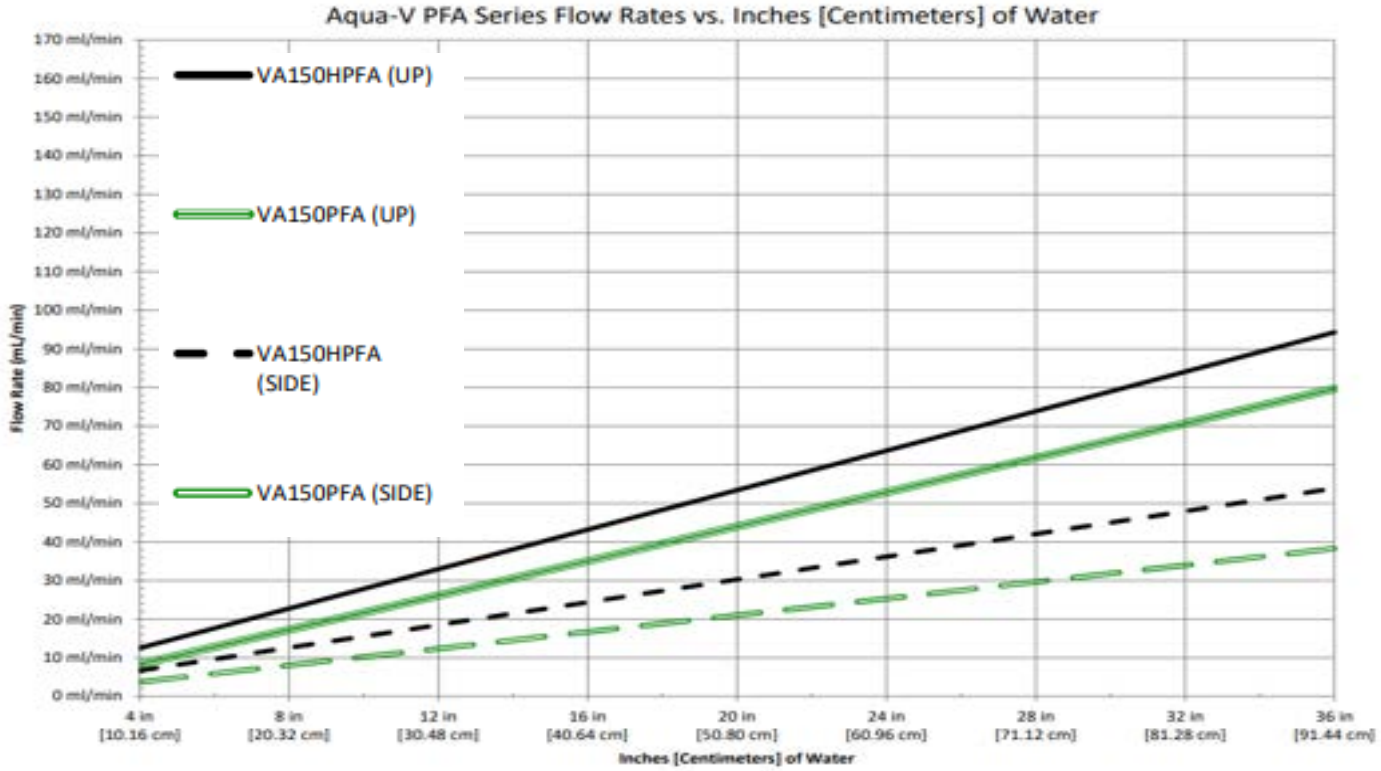

Toll-free: 1-800-99VALCO
Phone: (+1) 419-678-8731
Fax: (+1) 419-678-2200

WWW.VAL-CO.COM

START-GROW WATERING OPTIONS

Drinkers

CATALOG #	ITEM DESCRIPTION	SHIP WEIGHT Lbs	SHIP WEIGHT KG.	LIST PRICE
VD150	Dummy Drinker	0.01	0.00	
VBL150	Layer Drinker	0.02	0.01	
VA150	Aqua-V Drinker	0.02	0.01	
VA150H	Aqua-V Drinker High Flow	0.02	0.01	
VA150PFA	Aqua-V Drinker High Flow PFA	0.02	0.01	
VA150HPFA	Aqua-V Drinker High Flow PFA	0.02	0.01	
VL150THD	Layer Drinker Threaded	0.02	0.01	
VR150ZS	Roaster Drinker with Ziggity Short Plug	0.02	0.01	

2000 Drinkers per Box

Drinker Repair Parts

VAL-TOOL	Drinker Tool - New Style Universal	0.03	0.01	
VO140	O-Ring For Val Drinker Drinkers	0.00	0.00	
VS146	Saddle Standard (Replaces VS146C)	0.01	0.00	
VS146-Q500	Saddle Standard (Replaces VS146C) - Box of 500	5.60	2.54	

Replacement Standpipe Parts

820295	Direct replacement standpipe TruSeal cap for flexible standpipes	0.05	0.02	
820611	Direct replacement standpipe TruSeal cap for rigid standpipes	0.06	0.03	
820348	TruSeal rigid standpipe kit. Includes cap and float ball	0.06	0.03	
820349	TruSeal flex standpipe kit. Includes cap and float ball	0.06	0.03	
VC025TS	TruSeal flex cap kit includes cap and glue on adapter	0.06	0.03	
VS130	Spring for 18" flex standpipe when using TruSeal Cap	0.17	0.07	
VS132	Spring for 24" flex standpipe when using TruSeal Cap	0.23	0.10	
VS133	Spring for 30" flex standpipe when using TruSeal Cap	0.28	0.13	
VS134	Spring for 36" flex standpipe when using TruSeal Cap	0.34	0.15	
VSP12RA	RIGID SP ASSY, 12", 1/2" NPT	0.15	0.07	
VSP18RA	RIGID SP ASSY, 18", 1/2" NPT	0.26	0.12	
VSP24RA	RIGID SP ASSY, 24", 1/2" NPT	0.30	0.14	
VSP30RA	RIGID SP ASSY, 30", 1/2" NPT	0.27	0.12	
VSP36RA	RIGID SP ASSY, 36", 1/2" NPT	0.32	0.14	
VSP24FY	FLEX SP ASSY, 24", Repalcement *[Flex Tube & Trueseal]*	0.11	0.05	

Toll-free: 1-800-99VALCO
Phone: (+1) 419-678-8731
Fax: (+1) 419-678-2200

WWW.VAL-CO.COM

START-GROW WATERING OPTIONS

PVC PIPE & CONNECTORS

NOTE: Call for order info, pricing and availability of pipe only (PVC pipe with glued saddles)

CATALOG #	ITEM DESCRIPTION	SHIP WEIGHT LBS.	SHIP WEIGHT KG.	LIST PRICE
VC100	PVC Pipe Cutter (1 1/4" Max Diameter)	1.05	0.48	
730415	PVC Cement Glue (1/2 Pint)	1.00	0.45	
VG124	PVC Cement Glue (Pint)	1.14	0.52	
VG125-QT	PVC Cement Glue (Quart)	2.00	0.91	
VC210	PVC Cleaner (1/2 Pint)	0.55	0.25	
VP001	10' x 3/4" Plain PVC Pipe	1.20	0.54	
VP008	8' X 3/4" Plain PVC Pipe	0.93	0.42	
VC145	3/4" Coupler W/ O-Ring	0.06	0.03	
BG220	10' .875" Small Square PVC Pipe	0.09	0.04	
VC243	Square-to-Round Connector (Large square pipe)	0.02	0.01	
VC143	Square-to-Round Connector (small square pipe)	0.02	0.01	
820270	Square-to-Square Flex Connector Assembly (small square pipe)	0.07	0.03	
820271	Square-to-Square Flex Connector Assembly (large square pipe)	0.06	0.03	

PVC FITTINGS

VC146	3/4" PVC Coupling SXS	0.30	0.14	
VC148	3/4" PVC Cross SXSXSXS	0.01	0.00	
VC400	3/4" PVC Cap	0.04	0.02	
VT100	3/4" PVC Tee SXSXS	0.01	0.00	
VT101	3/4" PVC Tee SXSX 1/2" Thread	0.09	0.04	
VT102	3/4" PVC 90 Ell SXS	0.07	0.03	
VT106	3/4" Female Slip X 1/2" FPT PVC Reducer	0.05	0.02	
VT107	3/4" Male Slip X 1/2" FPT Bushing	0.03	0.01	
VT130	3/4" PVC Tee SXSX Thread	0.01	0.00	
VT131	3/4" PVC Male Adapter SX Thread	0.04	0.02	
VT132	3/4" PVC Female Adapter SX Thread	0.05	0.02	
VT133	3/4" PVC 90 ELL SX Thread	0.04	0.02	
VT134	3/4" PVC 90 ELL SX 1/2" Thread	0.07	0.03	
VT135	3/4" PVC 90 Degree ELL SX 1/2" S	0.01	0.00	
VT141	1" PVC Male Adapter Thread X 3/4" S	0.01	0.00	
VT188	1/2" PVC Male Adapter 1/2" Slip X 1/2" Thread	0.03	0.02	
VT189	3/4" PVC Bushing SX 1/2" S Reducer	0.02	0.01	
VT190	1/2" PVC Tee SXSXS	0.00	0.00	
VT191	1/2" Coupling SXS	0.03	0.01	
VT192	1/2" PVC 90N ELL SXS	1.42	0.64	
VT195	1 1/2" X 3/4" Bushing SXS	0.12	0.05	
VT196	1 1/2" PVC Cross DWV Fitting	7.16	3.25	
VT197	1/2" Union SXS	0.01	0.00	
VT198	1 1/2" PVC Coupler	0.16	0.07	
VT199	1 1/2" PVC Tee	0.16	0.07	
VT200	1 1/2" 90 Degree PVC ELL	0.28	0.13	
VT201	3/4" X 3/4" X 1/2" Tee SXSXS	0.10	0.05	
VT202	Bushing 1-1/2" X 1/2" THD.	0.10	0.04	
VT203	Bushing 1-1/2" X 1/2" S	0.00	0.00	
VT204	Socket 1-1/2" X 1-1/2" Barbed	0.14	0.06	
VT205	PVC Tube Plug	0.03	0.01	
VX127	3/4" UNION S X S	0.16	0.07	

VR-201
V-MAX REGULATOR

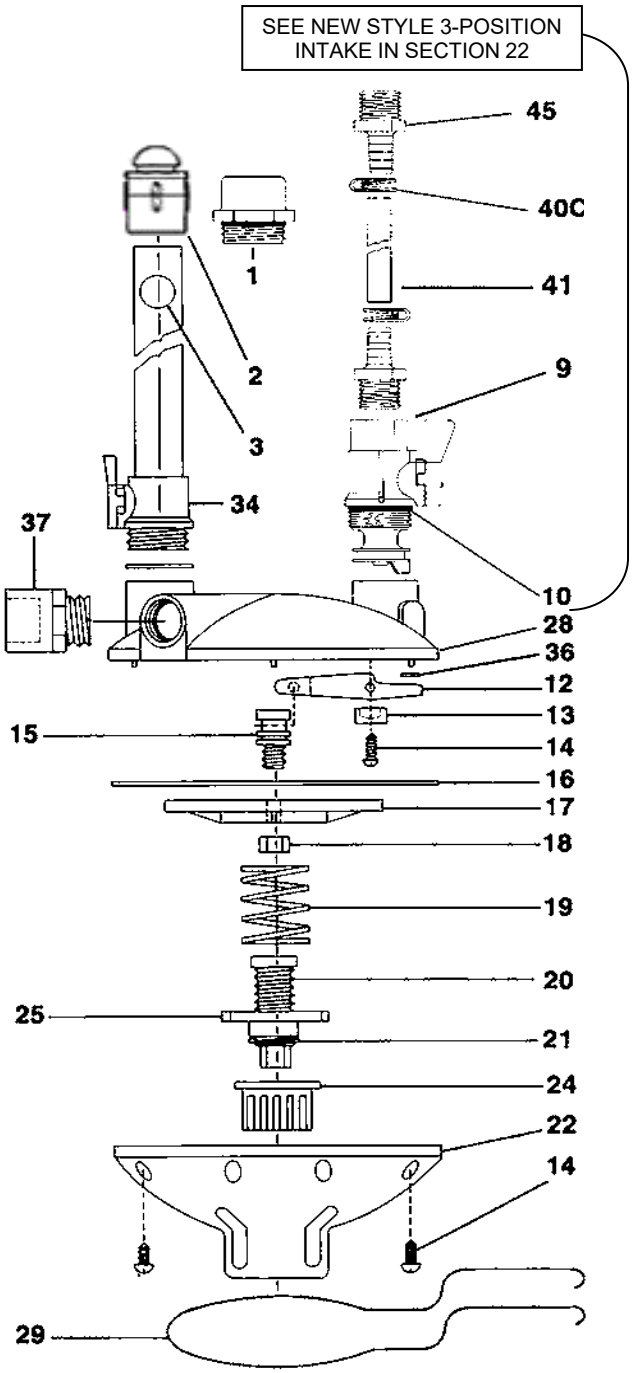

KEY	PART #	DESCRIPTION
1	VRP38	Regulator Plug
2	820294	Rigid TruSeal
3	VRP03	Standpipe Ball
9	VRP09	1/2" NPT Intake With Shutoff
	VRP09L	Low Pressure 1/2" NPT Intake W/Shutoff
10	VO145	O-Ring (Coupler)
12	VRP12G	Pivot
13	VRP13	Pivot Screw (2)
14	VRP14	Screw - Pivot Brkt (2) - Housing (9)
15	VRP15	Diaphragm Bolt
16	VRP16	Diaphragm
17	VRP52	Diaphragm Plate
18	VRP18	Diaphragm Nut
19	VRP19	Spring
20	VRP20	Adjustment Bolt
21	VRP21	Adjustment Bolt Pin
22	VRP22	Bottom Housing
24	VRP24	Adjustment Knob
25	VRP25	Adjustment collar
28	VRP28	Top Housing
29	VRP29	Optional Mounting Bracket
34		Standpipe (see page 25-04)
36	VRP36G	Seal
37	VT131	3/4" Male Adapter
40	VF204C	3/8" Hose Clamp
41	VRP48	PVC Yellow Reinforced Hose 3/8" 200 PSI
45	VRP45	1/2" Threaded Male Barb Hose Connector

VR-204
V-MAX REGULATOR

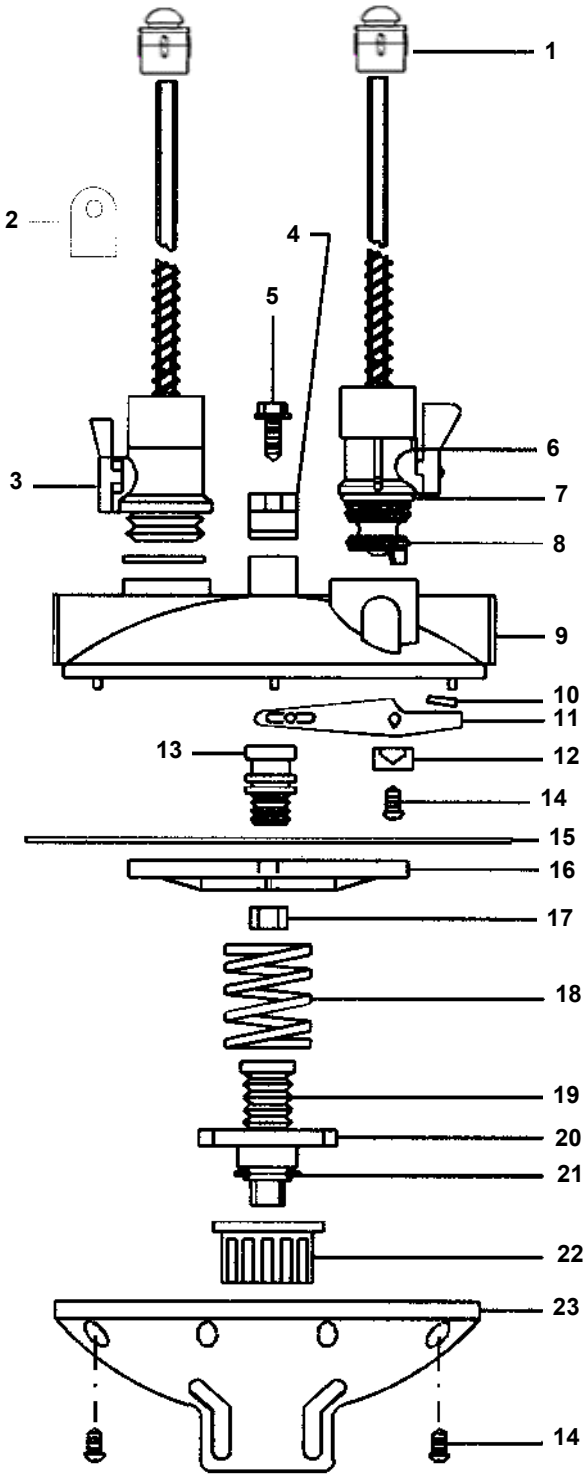

KEY	PART #	DESCRIPTION
1	820295	TruSeal Cap for Flex Standpipe
2	VRP42	(2) Mounting Brackets for Aluminum Extrusion
3		Standpipe - See page 22-04
4	VRP06	Pipe Clamp
5	VRP05-1	Screws for Pipe Clamp & Filter Bracket
6		Standpipe - See page 22-04
7	VO145	O-Ring for 3/4" Couplings
8	VRP31	O-Ring Seal
9	VRP32	Top Housing
10	VRP36G	Rubber Wafer Replacement
11	VRP12G	Pivot
12	VRP13	Pivot Brackets (Multiples of 2)
13	VRP15	Diaphragm Bolt
14	VRP14	Screw - 2 for Pivot Bracket or 9 for Bottom Housing
15	VRP16	Diaphragm
16	VRP52	Diaphragm Plate
17	VRP18	Diaphragm Nut
18	VRP19	Spring
19	VRP20	Adjustment Bolt
20	VRP25	Adjustment Collar
21	VRP21	Adjustment Bolt Pin
22	VRP24	Adjustment Knob
23	VRP22	Bottom Housing

VR-205
V-MAX REGULATOR

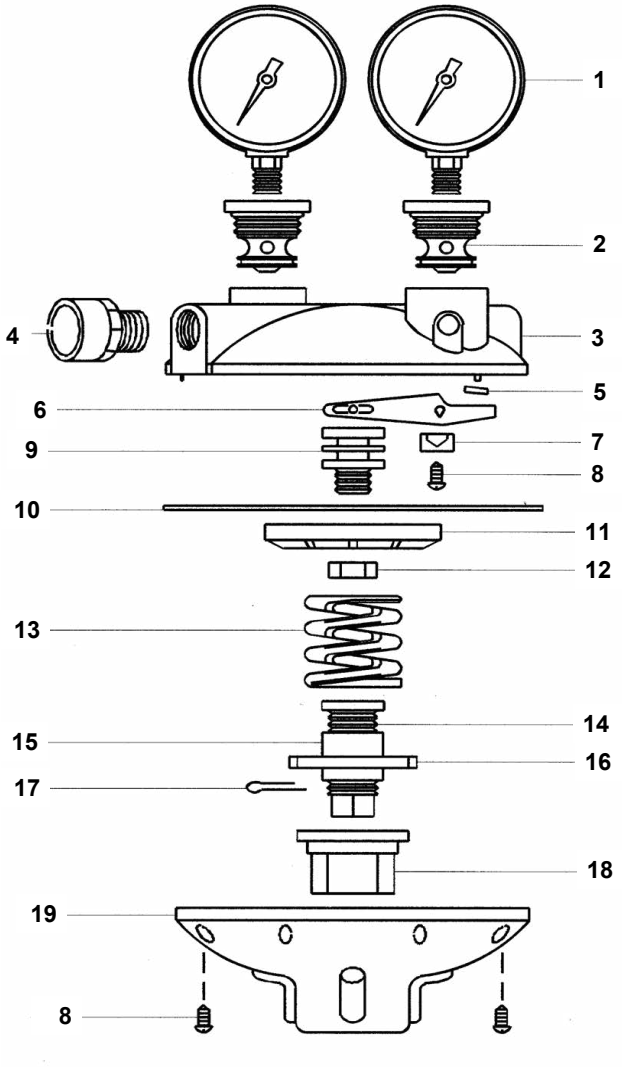

KEY	PART #	
1	VG100	Oil Filled Pressure Gauge (0-100 PSI)
2	VRP57	Gauge Intake
3	VRP58	Top Housing
4	VT131	3/4" PVC Male Adapter SX thread
5	VRP36G	Rubber Wafer Replacement
6	VRP12G	Pivot - New Style
7	VRP13	Pivot Brackets
8	VRP14	Screw - 2 for Pivot Bracket or 9 for Bottom Housing
9	VRP15	Diaphragm Bolt
10	VRP51	Diaphragm
11	VRP52	Diaphragm Plate
12	VRP18	Diaphragm Nut
13	VRP53	Spring
14	VRP20	Adjustment Bolt Pin
15	VRP50	Diaphragm Spacer
	820224	Diaphragm 1/2 Spacer
16	VRP25	Adjustment Collar
17	VRP21	Adjustment Bolt Pin
18	VRP55	Adjustment Knob
19	VRP54	Bottom Housing

VR209 REGULATOR REPAIRS

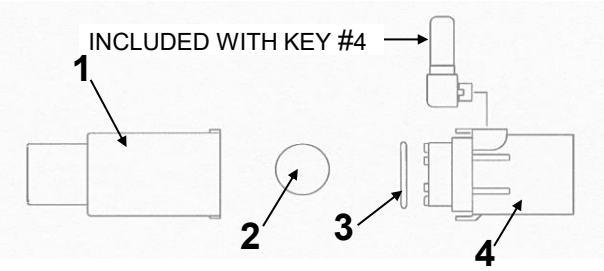

KEY	PART #	ITEM DESCRIPTION	List Price
1	VRP90	Left Housing with Stainless Steel Seat (SS Ball NOT Included) *Note: This part may be used in place of Left Housing & Plunger on* *Note: VR208 Regulator to convert to New Style VR209 Regulator.*	
2	VRP94	Stainless Steel Ball Only - 18mm 440CSS, Grade 25	
3	VO145	O-Ring for 3/4" Couplings	
4	VRP78	Right Housing with O-ring	

Toll-free: 1-800-99VALCO
Phone: (+1) 419-678-8731
Fax: (+1) 419-678-2200

REGULATOR REPAIRS

NUMERICAL LIST OF REGULATOR REPAIRS

CATALOG #	ITEM DESCRIPTION	SHIP WEIGHT LBS.	SHIP WEIGHT KGS.	LIST PRICE
820295	Auto Shutoff Cap for Flex Standpipe	0.05	0.02	
820611	Auto Shutoff Cap for Rigid Standpipe	0.06	0.03	
820334	Auto Shutoff Cap Replacement Seal for Flex Standpipe	0.00	0.00	
820335	Auto Shutoff Cap Replacement Seal for Rigid Standpipe	0.00	0.00	
PMHC3/4	3/4" Hose Clamp (2 req'd)	0.04	0.02	
PMTT6	7.5" Wire Tie	0.00	0.00	
RFV150	Flushing Intake Housing	0.18	0.08	
RFV151	Flushing Intake Cap	0.05	0.02	
RFV152	Flushing Intake Handle	0.04	0.02	
RFV153L	Flushing Intake Shaft Low Pressure	0.12	0.05	
RFV153S	Flushing Intake Shaft High Pressure	0.12	0.05	
RFV154	(2) Large O-Ring for RFV153	0.00	0.00	
RFV155	(2) Small O-Ring for RFV153	0.00	0.00	
RFV160	3-Position Intake	0.41	0.18	
RFV160L	3-Position Intake (Low Pressure)	0.41	0.18	
VF204C	Hose Clamp for 3/8" Urethane	0.01	0.01	
VG100	Oil Filled Pressure Gauge (0-100 PSI)	0.50	0.23	
VG100L	Oil Filled Pressure Gauge (0-15 PSI)	0.45	0.20	
VO145	O-Ring for 3/4" Couplings	0.00	0.00	
VO145S	O-Ring for RFV150	0.00	0.00	
VR202RK	Rebuild Kit for VR 202	1.17	0.53	
VRP03	5/8" Blue Rigid Standpipe Ball	0.01	0.00	
VRP03F	5/16 Blue Flex Standpipe Ball	0.00	0.00	
VRP05-1	Screws for Pipe Clamp & Filter Bracket	0.01	0.00	
VRP06	Pipe Clamp	0.06	0.03	
VRP09	1/2" NPT Intake With Shutoff	0.13	0.06	
VRP09L	1/2" NPT Low Press Intake With S/O	0.09	0.04	
VRP11	Top Housing - VR202 Regulator	0.50	0.23	
VRP119	O-Ring for Bottom of RVH114	0.00	0.00	
VRP12G	Pivot - New Style	0.03	0.01	
VRP13	Pivot Brackets (Multiples of 2)	0.00	0.00	
VRP14	Screw - 2 for Bracket or 9 for Bottom Housing	0.00	0.00	
VRP15	Diaphragm Bolt	0.02	0.01	
VRP16	Diaphragm	0.12	0.06	
VRP18	Diaphragm Nut	0.03	0.01	
VRP19	Spring	0.05	0.02	
VRP20	Adjustment Bolt Pin	0.03	0.01	
VRP21	Adjustment Bolt Pin	0.00	0.00	
VRP22	Bottom Housing	0.47	0.21	
VRP23	Top Housing - VR203 Regulator	0.60	0.27	

LISTING CONTINUED ON NEXT PAGE

Toll-free: 1-800-99VALCO
Phone: (+1) 419-678-8731
Fax: (+1) 419-678-2200

WWW.VAL-CO.COM

REGULATOR REPAIRS

NUMERICAL LIST OF REGULATOR REPAIRS

CATALOG #	ITEM DESCRIPTION	SHIP WEIGHT LBS.	SHIP WEIGHT KGS.	LIST PRICE
VRP24	Adjustment Knob	0.07	0.03	
VRP25	Adjustment Collar	0.03	0.01	
VRP28	Top Housing - VR201 Regulator	0.54	0.25	
VRP29	Regulator Mounting Bracket to Cage	0.39	0.18	
VRP30F	Intake With Shutoff (Flex)	0.12	0.05	
VRP31	O-Ring Seal - .867" ID	0.00	0.00	
VRP32	Top Housing - VR204 Regulator	0.55	0.25	
VRP38	Regulator Plug	0.04	0.02	
VRP36G	Rubber Wafer Replacement	0.00	0.00	
VRP42	Set of 2 Mounting Brackets for Aluminum Extrusion	0.01	0.00	
VRP45	1/2" Threaded Male Hose Connector (3/8" Barb)	0.01	0.00	
VRP48	PVC Yellow Reinforced Hose 3/8" 200 PSI (Drop Hose)	0.08	0.04	
VRP50	Diaphragm Spacer	0.01	0.01	
VRP51	Diaphragm	0.15	0.07	
VRP52	Diaphragm Plate	0.09	0.04	
VRP53	Spring	0.31	0.14	
VRP54	Bottom Housing	0.45	0.20	
VRP55	Adjustment Knob	0.07	0.03	
VRP57	Gauge Intake	0.04	0.02	
VRP58	Top Housing - VR205 Regulator	0.53	0.24	
VRP66	3/4" Barbed x 1/2" Male NPT Straight Fitting	0.04	0.02	
VRP67	3/4" Barbed Elbow x Female 3/4" NPT	0.06	0.03	
VRP67S	3/4" Barb x Female 3/4" NPT	0.05	0.02	
VRP68	3/4" Barbed Y Connector	0.05	0.02	
VRP76	3/4" Close Nipple Plastic	0.03	0.01	
VRP79	3/4" ID Yellow Hose - Per Foot	0.18	0.08	
VRP90	Left Housing With Stainless Steel Ball	0.11	0.05	
VRP94	Stainless Steel Ball Only - 18MM 440CSS, Grade 25	0.05	0.02	
VS130	Spring for 18" Flex Standpipe	0.17	0.07	
VS132	Spring for 24" Flex Standpipes	0.23	0.10	
VS133	Spring for 30" Flex Standpipes	0.28	0.13	
VS134	Spring for 36" Flex Standpipes	0.34	0.15	
VSC250	Body Only for VC025	0.00	0.00	
VSC251	Cap Only for VC025	0.00	0.00	
820335	Seal for VC025	0.00	0.00	
VSC750	Body Only for VC075	0.01	0.00	
VSC751	Cap Only for VC075	0.01	0.01	
820334	Seal for VC075	0.00	0.00	
VT131	3/4" PVC Male Adapter SX Thread	0.04	0.02	

FILTER KIT REPAIRS

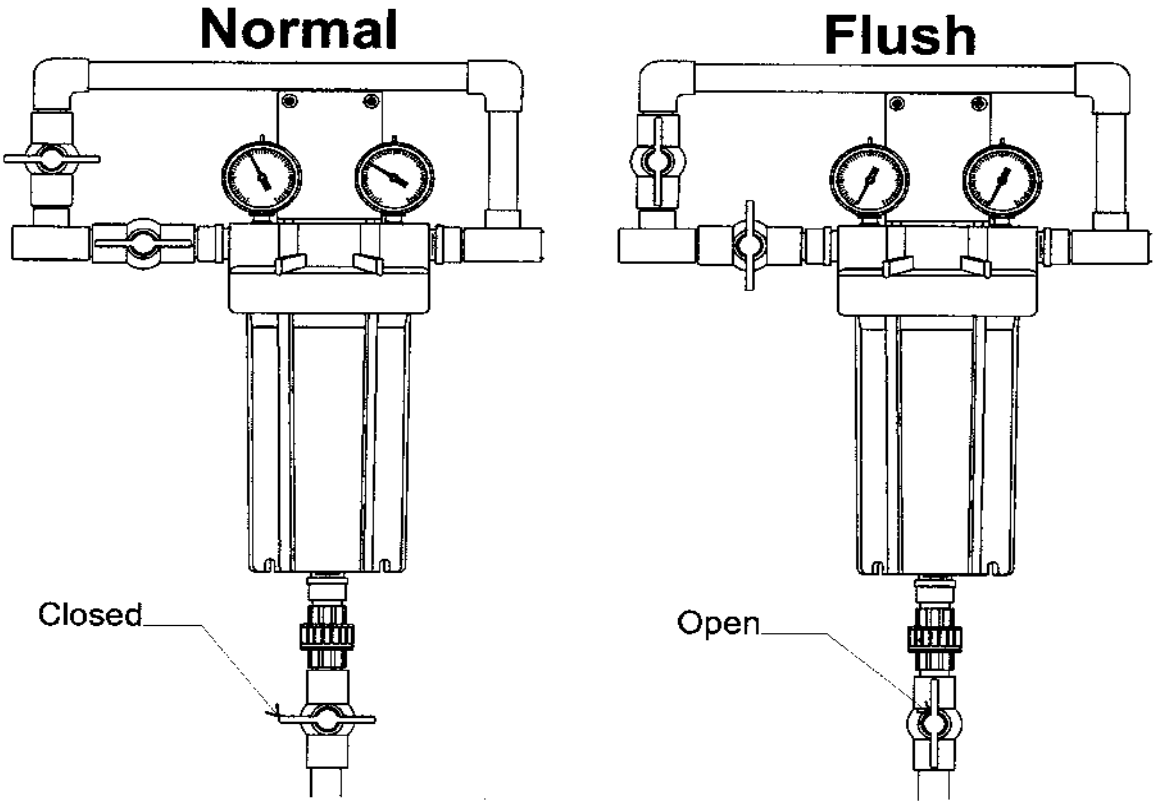

CATALOG NUMBER	ITEM DESCRIPTION	LIST PRICE
VF123	Bottom Housing for VF121 and VF122	
VF125	O-Ring for VF120 Filter Kit	
VF126	O-Ring for VF121 and VF122 Filter Kit	
VF128	Filter Bracket (Aluminum)	
VF129	Lid for Filter	
VG100	Oil Filled Pressure Gauge (0-100 PSI)	
VG100L	Oil Filled Pressure Gauge (0-15 PSI)	
VM121-10	Reusable Filter Cartridge for VF121/VF122 (10 Micron) - Blue Dot	
VM121-30	Reusable Filter Cartridge for VF121/VF122 (30 Micron) - Black Dot	
VM121-50	Reusable Filter Cartridge for VF121/VF122 (50 Micron) - Red Dot	
VT131	3/4" PVC Male Adapter S X Thread	
VT141	1" PVC Male Adapter 1" Thread X 3/4" S	
VX127	3/4" Union S X S	

SECTION 26

CONTROLS

IN THIS CATALOG SECTION

PAGE NUMBER	CONTENTS
26-02	Whole House Controllers™ - Ventra XT
26-03	Whole House Controllers™ - Ventra PRO & Ventra Plus
26-04	Accessories - Whole House Controllers
26-05	Fortica - Whole House Controllers
26-06	Fortica - Expansion Units and Sensors
26-07	Fortica - Bird Weighing, Alarms, & Accessories
26-08	Whole House Controllers™ - HORIZON®
26-09	Ventilation Controllers & Accessories
26-10	Specialty Controllers
26-11	Back-up Units, Surge Protection, Thermostats
26-12 thru 26-13	Alarm Systems - Agri-Alert & Accessories

Toll-free: 1-800-99VALCO
Phone: (+1) 419-678-8731
Fax: (+1) 419-678-2200

WHOLE HOUSE CONTROLLERS

VLink Remote Access Node

VENTRA XT

Large screen, Multiple zone, multiple program controls with pluggable relays and analog outputs

CATALOG #	ITEM DESCRIPTION	LBS.	KG.	LIST PRICE
921825	16 Channel Control No Triacs - 16 Digital and 12 Analog (0-10v or 10-0v) Output Channels - No Triac small fan VS Output Channels - 28 Analog Inputs and 6 Digital Inputs	32.0	14.5	
921826	16 Channel Control 2 Triacs - 14 Digital and 12 Analog (0-10v or 10-0v) Output Channels - 2 Triac small fan VS Output Channels - 28 Analog Inputs and 6 Digital Inputs	32.0	14.5	
921827	16 Channel Control 4 Triacs - 12 Digital and 12 Analog (0-10v or 10-0v) Output Channels - 4 Triac small fan VS Output Channels - 28 Analog Inputs and 6 Digital Inputs	32.0	14.5	
921830	24 Channel Control No Triacs - 24 Digital and 12 Analog (0-10v or 10-0v) Output Channels - No Triac small fan VS Output Channels - 28 Analog Inputs and 6 Digital Inputs	32.0	14.5	
921831	24 Channel Control 2 Triacs - 22 Digital and 12 Analog (0-10v or 10-0v) Output Channels - 2 Triac small fan VS Output Channels - 28 Analog Inputs and 6 Digital Inputs	32.0	14.5	
921832	24 Channel Control 4 Triacs - 20 Digital and 12 Analog (0-10v or 10-0v) Output Channels - 4 Triac small fan VS Output Channels - 28 Analog Inputs and 6 Digital Inputs	32.0	14.5	
921835	32 Channel Control No Triacs - 32 Digital and 12 Analog (0-10v or 10-0v) Output Channels - No Triac small fan VS Output Channels - 28 Analog Inputs and 6 Digital Inputs	32.0	14.5	
921836	32 Channel Control 4 Triacs - 28 Digital and 12 Analog (0-10v or 10-0v) Output Channels - 4 Triac small fan VS Output Channels - 28 Analog Inputs and 6 Digital Inputs	32.0	14.5	

VENTRA NETWORKING & WWW ACCESS

Need (1) of Node per farm site. Need (1) Software per laptop computer

CATALOG #	ITEM DESCRIPTION	LBS.	KG.	LIST PRICE
921645	Vlink Stand Alone Thumbdrive with Software - (1) license	0.5	0.2	
921743	Vlink Hardware Assembly Node	7.0	3.2	

Toll-free: 1-800-99VALCO
Phone: (+1) 419-678-8731
Fax: (+1) 419-678-2200

WHOLE HOUSE CONTROLLERS

Ventra PRO

VENTRA PRO

Multiple zone, multiple program controls with pluggable relays

CATALOG #	ITEM DESCRIPTION	LBS.	KG.	LIST PRICE
VPR-016-001	16 Channel Control - Expandable to 92 Channels - 14 Analog Inputs and 6 Digital Inputs	27.0	12.2	
VPR-016-201	16 Channel Control - 14 on/off, 2 variable speed - Expandable to 92 Channels - 14 Analog Inputs and 6 Digital Inputs	27.3	12.4	
VPR-016-401	16 Channel Control - 12 on/off, 4 variable speed - Expandable to 92 Channels - 14 Analog Inputs and 6 Digital Inputs	26.7	12.1	
VPR-024-001	24 Channel Control - Expandable to 92 Channels - 14 Analog Inputs and 6 Digital Inputs	23.0	10.4	
VPR-024-201	24 Channel Control - 22 on/off, 2 variable speed - Expandable to 92 Channels - 14 Analog Inputs and 6 Digital Inputs	28.8	13.1	
VPR-024-401	24 Channel Control - 20 on/off, 4 variable speed - Expandable to 92 Channels - 14 Analog Inputs and 6 Digital Inputs	20.0	9.1	
VPR-032-001	32 Channel Control - Expandable to 92 Channels - 14 Analog Inputs and 6 Digital Inputs	29.1	13.2	
VPR-032-401	32 Channel Control - 28 on/off, 4 variable speed - Expandable to 92 Channels - 14 Analog Inputs and 6 Digital Inputs	30.5	13.8	

VENTRA PLUS

Multiple zone controls with fixed relays

CATALOG #	ITEM DESCRIPTION	LBS.	KG.	LIST PRICE
RD-001-301	VENTRA1200ZP 12 Device Output Channels incl. 2 Variable Speed, Multi Zone, "Hot Keys" Expandable (Model 1200ZPVS)	13.1	5.9	

ACCESSORIES
WHOLE HOUSE CONTROLLERS

SENSORS - *Ventra and GainTRAC*

CATALOG #	ITEM DESCRIPTION	LBS.	KG.	LIST PRICE
SR-017-100	Temp Sensor	0.20	0.1	
SR-09	Temp/Airspeed Sensor	0.15	0.1	
921799	Relative Humidity Sensor - Water Resistant	1.00	0.5	
PA-56	Relative Humidity Sensor - Dust Tight	0.51	0.2	
921950	Carbon Monoxide Sensor 0-500 ppm	1.00	0.5	
921951	Carbon Dioxide Sensor 0-10,000 ppm	1.90	0.9	
921952	Ammonia Sensor Drager DOL-53 0-100 ppm	1.64	0.7	
922027	Replacement Element for Ammonia Sensor 921952	4.00	1.8	
820371	Water Meter Kit, Gallons, Brass Body, 1 PPG Digital output 5/8" X 3/4" Connections 0.5gpm min 25gpm max flow	8.00	3.6	
820373	Water Meter Kit, Metric, Brass Body, 0.01 m3/pulse Digital output 5/8" X 3/4" Connections 0.11 m3h min 5.70 m3h max flow	8.00	3.6	
PA-69	Water Meter Sensor for legacy Badger Water Meters (water meter not included)	0.20	0.1	
PA-72	Feed Sensor	1.00	0.5	
VE-006-001	Static Pressure Sensor M950SPS	2.70	1.2	
VE-006-101	Static Pressure Sensor Kit - Enclosure Not Included	2.00	0.9	
ZC1150RL	Sensor Wire - 1,000 Foot Roll	19.97	9.1	
ZC1150R	Sensor Wire - Per Foot APPLIES TO ANY NON-1000' ROLL QUANTITY	0.02	0.0	
WS-27	Scotchlok - Wire Connector	0.00	0.0	
PA250	Wall Mount Manometer (-.05" - 3" W/C)	0.00	0.0	
VM300	Dwyer Mark II Manometer (0-8mm W/C) - Wall Mounted	1.13	0.5	

EXPANSION STATIONS - *Ventra and GainTRAC*

RD-002-101	12 Channel Variable Speed Expansion Station (Model 12VS) 10 Analog, 4 Digital Inputs; 10 On/Off, 2 Variable Outputs	11.12	5.0	
RD-008-001	2 Variable Speed Channel Expansion Station (Model 2VS)	7.59	3.4	

VENTRA PRO ACCESSORIES

921458	Analog Output Board Kit - adds (12) 0-10v analog outputs to Ventra PRO controllers - includes power cable	0.09	0.0	

VENTRA NETWORKING & WWW ACCESS - *Ventra*

921645	Vlink Stand Alone Thumbdrive with Software	0.50	0.2	
921743	Vlink Hardware Assembly Node	6.95	3.2	

WHOLE HOUSE CONTROLLERS

Fortica Control

SYSL-REMOTE software

NOVUS Farm Management Software

FORTICA

Flexible whole-house controllers - add (1) EKU-1 per curtain machine/actuator/winch channel required

CATALOG #	ITEM DESCRIPTION	MODEL #	LBS.	KG.	LIST PRICE
922010	FORTICA Control for BROILERS 33 Output channels - 16 Digital, 16 Analog (0-10v), and 1 alarm (NO) 20 Inputs - 12 Analog and 8 Digital	FORTICA-PB	16.2	7.3	
922011	FORTICA Control for BREEDERS 33 Output channels - 16 Digital, 16 Analog (0-10v), and 1 alarm (NO) 20 Inputs - 12 Analog and 8 Digital	FORTICA-PP	13.1	5.9	
922012	FORTICA Control for AVIARY & FREE-RANGE LAYERS 33 Output channels - 16 Digital, 16 Analog (0-10v), and 1 alarm (NO) 20 Inputs - 12 Analog and 8 Digital	FORTICA-PS	16.2	7.3	

FORTICA Remote Access

CATALOG #	ITEM DESCRIPTION	MODEL #	LBS.	KG.	LIST PRICE
922030	Router with PSU for connecting FORTICA to web (1) per farm site Requires Ethernet connectivity and (1) SYSL-REMOTE per FORTICA control connected Order cable/connectors and optional surge protection kits as needed	SYSLINQ	5.3	2.4	
922031	Software package to allow remote access (VNC and VPN) to Fortica from laptop, tablet, and mobile phones	SYSL-REMOTE	0.0	0.0	
922032	Fortica Remote Alarm - Software Only	SYSL-NOTI-MOD	0.0	0.0	
922033	Fortlink On-farm management display for multi-barn sites. Includes SYSLINQ router for remote connectivity via ethernet. Requires (1) SYSL-REMOTE NOTE - when using FORTLINK-S each Fortica does NOT require its own SYS-REMOTE software package	FORTLINK-S	10.0	4.5	
922034	Novus Farm Management Software for remote connected farm sites with multiple barns. Pulls in data for graphical comparisons and reporting on a laptop. Includes (1) license	NOVUS-FARM	0.4	0.2	
922066	Fortica Flock Chart Software Upgrade	HO09032055	0.0	0.0	

FORTLINK-S management display

SYSLINQ Router

FORTICA Software Upgrade for ENERGY mode with (3) Heat Exchangers

WHOLE HOUSE CONTROLLERS

FORTICA-FWS

CAN-IO-20-33

EKU-1

CAN-IO-LCA

HLV-10

Easy button

FORTICA Expansion Units

Flexible whole-house controllers

CATALOG #	ITEM DESCRIPTION	MODEL #	LBS.	KG.	LIST PRICE
922014	FWS Slave unit for feed weighing and multiple house feed requests from shared bins - max 9 output augers 16 Digital Outputs, 16 analog outputs	FORTICA-FWS	16.2	7.3	
922015	Input/Output expansion module with 33 Output channels - 16 Digital, 16 Analog (0-10v), and 1 alarm (NO) 20 Inputs - 12 Analog and 8 Digital	CAN-IO-20-33	9.0	4.1	
922016	Input/Output expansion module with 14 Output channels - 12 Digital, 1 Analog (0-10v), and 1 alarm (NO) 6 Inputs - 2 Analog and 4 Digital	CAN-IO-6-14	9.0	4.1	
922017	Output module for Silo Weighing(1 bin) or Bird Scales (2 bird scales) - requires BinTRAC HL-10P p/n 502137 Houselink box for silo weighing	CAN-IO-LCA	4.1	1.9	
502137	Houselink Proportional converter for BinTRAC Display to Fortica	HL-10P	0.3	0.1	
	EasyButton with green pushbutton 1xNO incl LED - use one per bin for filling events	EASYBUTTON-GP	#N/A		
922018	Output module for control of (1) inlet/curtain/winch with time-based control with or without potentiometer 230VAC Converts Fortica 0-10v signal into runtime opening/closing	EKU-1	4.0	1.8	
922019	Lighting Amplifier 0-10v with manual override	HLV-10	3.7	1.7	

FORTICA Sensors

CATALOG #	ITEM DESCRIPTION	MODEL #	LBS.	KG.	LIST PRICE
922020	Temperature Sensor	PT1000	0.1	0.1	
922021	Temperature Sensor with 19' (6m) of wire - usually buried in a 10' pvc pipe in the floor for floor temp sensing	PT1000-6	1.0	0.5	
922022	Outdoor Temperature Sensor (1 per farm with connected Fortica Controls)	PT1000-BU	0.7	0.3	
922023	Relative Humidity Sensor	RV-A-0-5	0.4	0.2	
922024	Static Pressure Sensor for Positive- and Negative-Pressure ventilation	OPN-DR-ST-I	0.7	0.3	
922025	Static Pressure Tubing and Enclosure Kit (1 per SP Sensor required)	OPN-DR-ST-SET	0.1	0.0	
922026	Carbon Dioxide Sensor 0-5000ppm	OPN-CO2-E2	1.0	0.5	
921952	Ammonia Sensor Drager DOL-53 0-100 ppm	OPN-DOL53-NH3	1.6	0.7	
922027	Replacement Element for Ammonia Sensor 921952	DOL53-NH3-RES	4.0	1.8	
922028	Light Sensor 0-50 lux	OPN-LS-50LUX	3.0	1.4	
820371	Water Meter Kit, Gallons, Brass Body, 1 PPG Digital output 5/8" X 3/4" Connections 0.5gpm min 25gpm max flow		8.0	3.6	
820373	Water Meter Kit, Metric, Brass Body, 0.01 m3/pulse Digital output 5/8" X 3/4" Connections 0.11 m3h min 5.70 m3h max flow		8.0	3.6	
922029	Outside Weather Station for Wind Speed and Direction (1 per farm with connected Fortica Controls)	OPN-WRS-K	5.0	2.3	

WHOLE HOUSE CONTROLLERS

DWS-3-ZW

DWS-4-ZW

DWS-5-ZW

DWS-6-ZW

ACA-10N

ETHER-OVP

CONN-RJ45

FORTICA Bird Weighing

Platforms with load cells included

CATALOG #	ITEM DESCRIPTION	MODEL #	LBS.	KG.	LIST PRICE
922035	Bird Scale for Turkeys 1m x 1m platform 100kg	DWS-3-ZW	10.00	4.5	
922036	Bird Scale for Broilers/Pullets .4m x .4m platform 35kg	DWS-4-ZW	14.72	6.7	
922037	Bird Weighing Perch for Cage Layers 15kg	DWS-5-ZW	10.00	4.5	
922038	Bird Weighing Perch for Cage Broilers 15kg	DWS-6-ZW	10.00	4.5	
922039	Connector Box for DWS weighers	KK-7P	10.00	4.5	
922040	7-pin male plug for DWS	CON-7P-M	10.00	4.5	

FORTICA Egg Counting (or generic egg counters)

922062	Egg counter sensor control - 230VAC Connects to up to 2 egg counters on the Agri Net network - Fortica	CAN-SENS	0.98	0.4	
922063	Egg counter sensor control - 24Vdc Connects to up to 2 egg counters on the Agri Net network - Fortica	CAN-SENS-D	4.00	1.8	
922064	Brackets for the egg counters	EGGX-MON-L+L	1.68	0.8	
922065	Waterproof Connector - Quick disconnect for egg counter	WDS-7P	0.50	0.2	
922067	50cm / 20” Egg counter	EGGXACT-50	3.00	1.4	
922060	40cm / 16” Egg counter	EGGXACT-40	1.64	0.7	
922061	20cm / 8” Egg counter	EGGXACT-20	1.50	0.7	

FORTICA Alarms and Surge Protection

922041	Fortica Master Alarm - 10 Groups	ACA-10N	10.00	4.5	
922042	Siren 110db, 12VDC	SIRENE-AS-612	10.00	4.5	
922043	Flashing Alarm Light 10-100VDC, 20-72 VAC, 2W, Orange	AU-003	10.00	4.5	
922044	Three-phase voltage monitor	PM-31	10.00	4.5	
922045	Single Thermostat	T-51	10.00	4.5	
922046	Min/Max Double Thermostat	T-52	10.00	4.5	
ZC15165	Low Water Pressure Switch (Alarms 15/60 psi Min/max)		1.12	0.5	
922047	Overvoltage Protection for Fortica and Ethernet - recommend (1) per Fortica, Syslinq, FWS, Fortlink	ETHER-OVP	0.20	0.1	
922048	Overvoltage Protection for Fortica and Ethernet - includes 2x UTP patch cables 30cm	ETHER-OVP-SET	0.30	0.1	

FORTICA Connection Accessories

922049	1 meter Ethernet cable 2x2x0.64mm for CAN-BACKBONE comms between Forticas, Routers, Weather Stations, and FWS Feeders	ETHER-BK	10.00	4.5	
922050	One meter CAN-Bus cable 1x2x0.64mm for CAN-LOCAL comms between Forticas and slaves/expansion stations	CAN-BK	0.03	0.0	
922051	4-pin male RJ45 connector - handcrimps onto ETHER-BK and CAN-BK cables - need (2) per cable run	CONN-RJ45	10.00	4.5	
ZC183F	One foot (1') 3-Conducter shielded 18 AWG wire for connecting temp and other sensors to Fortica		0.04	0.0	

FORTICA Repair Parts

922110	Front I/O Board	CAN-20-33-PWU	3.00	1.4	
922111	I/O Connector Board	CON-CAN-20-33	1.00	0.5	

WHOLE HOUSE CONTROLLERS

HORIZON® Boards

CATALOG #	ITEM DESCRIPTION	LBS.	KG.	LIST PRICE
920957	Relay (RIOM) assembly w/ (6) normally open output relays	0.5	0.2	
920962	Input (GPIOM) assembly w/ (12) digital/analog inputs and (2) analog outputs	0.3	0.1	

HORIZON Sensors

CATALOG #	ITEM DESCRIPTION	LBS.	KG.	LIST PRICE
921092	Temperature Sensor 10k thermistor	0.1	0.0	
921093	Relative Humidity Sensor	1.0	0.5	
921094	Static Pressure Sensor	0.3	0.1	
921096	Static Pressure Sensor Kit w/ tubing, filters, enclosure	2.7	1.2	
921095	Air Speed Sensor - Cup Type	1.0	0.5	
PA-69	Water Meter Sensor	0.2	0.1	
PA-72	Feed Motor Current Sensor	1.0	0.5	
921096	Static Pressure Sensor Kit w/ tubing, filters, enclosure	2.7	1.2	
921095	Wind Speed Anemometer Sensor - 125 fpm minimum	1.0	0.5	
PA-69	Water Meter Sensor	0.2	0.1	
PA-72	Feed Motor Current Sensor	1.0	0.5	

VENTILATION CONTROLLERS

OVATION SERIES

All Ovation Series controls include (1) ZC1351 temp sensor

CATALOG #	ITEM DESCRIPTION	MODEL #	LBS.	KG.	LIST PRICE
C801	6 Stage: 2 Variable, 4 On/Off, With Alarm	Ovation 24	6.9	3.1	

SENSORS

CATALOG #	ITEM DESCRIPTION	MODEL #	LBS.	KG.	LIST PRICE
ZC1351	1' Temp Sensor - C & D Series, Ovation	832-00000	0.1	0.0	
ZC1353	30' Temp Sensor - C & D Series, Ovation	832-00002	1.0	0.5	
ZC1348	6' Temp Sensor for VTC, TSC, FHC, AEC, SEC, TVS, PEC	MT-P3A	0.0	0.0	
ZC1150RL	Sensor Wire - 1,000 Foot Roll	COMM WIRE	20.0	9.1	
ZC1150R	Sensor Wire - Per Foot APPLIES TO ANY NON-1000' ROLL QUANTITY	COMM WIRE	0.0	0.0	
WS-27	Scotchlok Two-Wire Connector	3-M	0.0	0.0	

PEC+ VENTILATION CONTROL

CATALOG #	ITEM DESCRIPTION	MODEL #	LBS.	KG.	LIST PRICE
C423	PEC+ 8 Stage 2VS 6 Relay, Curtains, Alarm		4.0	1.8	

SPECIALTY CONTROLLERS

POLAIR HIGH PRESSURE FOGGING UNITS

CATALOG #	ITEM DESCRIPTION	LBS.	KG.	LIST PRICE
VE-010-000	POLAIR 400HC - No Contactor - 2 Stages Cooling	8.5	3.9	
VE-010-001	POLAIR 400HC - 23 Amp - 2 Stages Cooling	9.0	4.1	
VE-010-101	POLAIR 400HC - 43 Amp - 2 Stages Cooling	9.0	4.1	
VE-010-201	POLAIR 400HC - 60 Amp - 2 Stages Cooling	9.0	4.1	

VARIABLE SPEED CONTROLS

CATALOG #	ITEM DESCRIPTION	LBS.	KG.	LIST PRICE
C407	MSC-4 Manual Variable Speed (12.5A)	2.0	0.9	
C408	MTC-4C Automatic Variable Speed control	2.0	0.9	

LIGHTING CONTROLS

CATALOG #	ITEM DESCRIPTION	LBS.	KG.	LIST PRICE
921133	Light Dimmer 4 Circuits 2000W (8000W total) each 0-10V input 110V	8.0	3.6	

BACK-UP UNITS, THERMOSTATS, SURGE PROTECTION

BACK-UP UNITS

CATALOG #	ITEM DESCRIPTION	LBS.	KG.	LIST PRICE
VE-017-101	ThermoTRAC Backup Control - 6 Outputs Expandable to 8, Min Vent Timer, Alarm	17.1	7.8	
RY-008-003	Line Power Time Delay Relay Kit - Prevents Brownout Alarms for ThermoTRAC	0.0	0.0	
VE-017-200	Main Control Power Failure Monitor	0.1	0.0	

THERMOSTATS

CATALOG #	ITEM DESCRIPTION	LBS.	KG.	LIST PRICE
C415	Single Stage Thermostat SPDT - 16/12/10A at 120/240/277VAC	2.0	0.9	

SURGE PROTECTION

CATALOG #	ITEM DESCRIPTION	LBS.	KG.	LIST PRICE
921810	Phone Surge Suppressor	0.0	0.0	
VE-013-101	Deadbolt - Data Surge Suppressor	0.1	0.1	
VE-016-001	Deadbolt - Control Circuit Surge Suppressor	0.6	0.3	

Grounding Kit

CATALOG #	ITEM DESCRIPTION	LBS.	KG.	LIST PRICE
922170	Grounding Kit - 4' Grounding Rod Electrodes (4) Ground Round Couplers (2) Ground Rod Clamps (3) Driving Sleeve (1) 25' #6 AWG Bare Copper Wire (2)	15.0	6.8	

ALARM SYSTEMS

AGRI-ALERT 400 ALARM & MONITOR

Dry contact only requires C415 for temp alarming - not ZC1351 or ZC1353

CATALOG #	ITEM DESCRIPTION	MODEL #	LBS.	KG.	LIST PRICE
C379	Agri-Alert 400, 4 Zones Dry Contact only, non-expandable, no auto-dialer. -Power Pack not included	400	3.0	1.36	
C3003	Power Pack Transformer: 120/16.5V, 40VA, 12V Sealed Battery, Battery Box, for AA2400, AA400	PP-2400	10.0	4.54	

AGRI-ALERT 800EZ ALARM & MONITOR

Includes Battery Back-up and 24VDC Transformer

CATALOG #	ITEM DESCRIPTION	MODEL #	LBS.	KG.	LIST PRICE
C376	Agri-Alert 800EZ Kit* - Includes Outdoor Temp Card	800EZ	7.0	3.18	
C377	Agri-Alert 800EZ* - Outdoor Temp Card Not Included	800EZ	3.8	1.72	
C378	Outdoor Temperature Card for 800EZ		3.0	1.36	

AGRI-ALERT 128 ALARM & MONITOR

CATALOG #	ITEM DESCRIPTION	MODEL #	LBS.	KG.	LIST PRICE
921527	AGRI-ALERT 128 REV A KIT, PVX COMMS W/BATBOX & TP-8	15.22	29.9	13.58	
921418	Agri-Alert 128, Battery Box / 12V 7 AH	128	0.0	0.00	
921525	WIRELESS RS-485 FOR AGRI ALERT NETWORK		0.0	0.00	
921524	Power Supply - 24V, 20W		0.0	0.00	
921414	Transponder - Adds 8 Zones Remote from AA128/AA9600	TP-800	2.8	1.28	
921528	AGRI-ALERT TP-8 TRANSPONDER EXPANSION MODULE 8 ZONES	TP-8	2.7	1.23	
921415	Keypad - Adds 4 zones remote to AA128/AA9600 Rugged enclosure, keypad and display	KPB-400	3.4	1.54	

ALARM SYSTEMS

AGRI-ALERT 9600 ALARM & MONITOR (ALARM IS OBSOLETE)

CATALOG #	ITEM DESCRIPTION	MODEL #	LBS.	KG.	LIST PRICE
C303B	Power Pack Transformer: 120 or 240/16.5V, 130VA, 12V Battery, Battery Box, for Agri-Alert 9600	PP-9600	10.0	4.5	
ZC1506A	8 Zone Expansion Card for AA9600	AA-96Ext	1.0	0.5	
921414	Transponder - Adds 8 Zones Remote from AA128/AA9600	TP-800	2.8	1.3	
921415	Keypad - Adds 4 zones remote to AA128/AA9600 Rugged enclosure, keypad and display	KPB-400	3.4	1.5	
ZC15163	Keypad - Adds 4 zones remote from 9600 Non-rugged enclosure, keypad and display	KP-400	1.8	0.8	

AGRI-ALERT ALARM ACCESSORIES

Dry contact only requires C415 for temp alarming - not ZC1351 or ZC1353

CATALOG #	ITEM DESCRIPTION	MODEL #	LBS.	KG.	LIST PRICE
ZC1351	Temp Sensor with 1' wire	832-00000	0.1	0.0	
ZC1353	Temp Sensor with 30' wire	832-00002	1.0	0.5	
C415	Single Stage Thermostat SPDT - Use for AA400 - 16/12/10A at 120/240/277VAC		2.0	0.9	
ZC15165	Low Water Pressure Switch (Alarms 15/60 Psi Min/Max)	832-00020	1.1	0.5	
ZC1515	Siren - 12VDC	115-00005	1.0	0.5	
ZC1511	Power Failure Relay Kit, 120VAC (1 Phase)	VRB-1-120	3.0	1.4	
ZC1514	Power Failure Relay Kit, 120VAC (3 Phase) Cannot be used in Europe	VRB-3-120	3.0	1.4	
ZC15156	Power Failure Relay Kit , 240VAC (1 Phase)	VRB-1-240	2.4	1.1	
ZC15157	Power Failure Relay Kit, 240VAC (3 Phase) Cannot be used in North America	VRB-3-240	1.0	0.5	
ZC1520	Passive Infra-Red Motion Detector	832-00021	0.0	0.0	
ZC1521	Door Alarm Contact	830-00010	0.0	0.0	
ZC1526	Photo Electric Detector Beam	830-00011	0.0	0.0	
ZC1509	Transformer, 16.5VAC, 40VA, for AA2400	T-2400	2.0	0.9	
ZC1508	Transformer, 120 or 240/16.5VAC, for AA9600	T-9600	2.0	0.9	
ZC1505	Rechargeable battery, 7AH, 12V, Sealed for 2400, 9600	112-00003	4.0	1.8	
ZC15171	Heat detector, 135F or 15F rise/min	832-00019	0.0	0.0	
ZC15172	Heat detector, 200F or 15F rise/min	832-00034	0.6	0.3	

This page left intentionally blank

SECTION 27
VENTILATION INFO

IN THIS CATALOG SECTION

PAGE NUMBER	CONTENTS
27-02	Ventilation Formulas
27-03	Worksheet
27-04	Minimum CFM Requirements for Velocity Targets

Toll-free: 1-800-99VALCO
Phone: (+1) 419-678-8731
Fax: (+1) 419-678-2200

VENTILATION FORMULAS

Average ceiling height= (Sidwall height x Peak height) /2

Cross Sectional Area= Average height x width

Volume= CSA x length

Single air exchange rate (in seconds)= (volume/cfm) x 60

Velocity in FPM= CFM (fan capacity)/CSA

Required CFM= Velocity x CSA

Required CSA in square feet (inlet)= CFM/desired velocity

Note: This calculation must be modified for smaller inlets such as vent doors to account for the compression of air (vena contracta effect) as it passes through the door.
Typically a factor of 1.6 is applied.
Vent doors: CSA = (CFM/desired velocity x 1.6)
Vent doors: # of doors = (required CSA from above)/ (vent door opening <l"x w"> / 144)

Heat Transfer through a wall or other surface= (Surface area/R value) x temp. difference

Note: Temp. difference will be the difference between outside and inside a building.

Temperature rise= BTU (including heat transfer, bird heat and all other sources)/Total CFM

Electricity cost (for fans) = ((CFM x Hours used)/(CFM/watt x 1000)) x cost per KW hour

Toll-free: 1-800-99VALCO
Phone: (+1) 419-678-8731
Fax: (+1) 419-678-2200

WORKSHEET

CFM=CSA x Target Velocity

CSA=Avg. Ceiling Height x Building Width

CSA - CROSS SECTIONAL AREA

Sidewall Height _____ + Peak Height _____

= _____ divided by 2 = _____ Average Ceiling Height

x Building Width _____ = CSA _____

CFM - TOTAL FAN POWER REQUIRED

CFM = CSA x Target Velocity

CSA _____ x Target Velocity _____

= Total CFM _____

NUMBER OF FANS REQUIRED

Total CFM _____ ÷ CFM/fan _____

= # of fans _____ Rounded up = _____

x CFM/Fan _____ = Actual CFM _____

CFM Total fan power required. **Make sure to use the correct static pressure rating when choosing fan specifications.**

CSA **C**ross **S**ectional **A**rea of the building.
multiplied by the distance from the floor to the bottom of the baffle. Sidewall height is

TUNNEL INLET SIZING

Total CFM _____ ÷ Target Velocity _____

= Square Feet of Inlet _____ ÷ Inlet Height _____

= Linea Linear ft. of inlet _____ ÷ 2 = Inlet per side _____

Target Velocity: ● Use 350-375fpm for 6" pad inlet

Toll-free: 1-800-99VALCO
Phone: (+1) 419-678-8731
Fax: (+1) 419-678-2200

MINIMUM CFM REQUIREMENTS FOR VELOCITY TARGETS

NOTE

Fan performance ratings must reflect actual conditions.

Minimum of .10 ratings should be used in typical broiler house.

BUILDING WIDTH (FT)	AVERAGE CEILING 7 FT.			AVERAGE CEILING 8 FT.			AVERAGE CEILING 9 FT.		
	TARGET VELOCITY			TARGET VELOCITY			TARGET VELOCITY		
	400	500	600	400	500	600	400	500	600
30	84000	105000	126000	96000	120000	144000	108000	135000	162000
31	86800	108500	130200	99200	124000	148800	111600	139500	167400
32	89600	112000	134400	102400	128000	153600	115200	144000	172800
33	92400	115500	138600	105600	132000	158400	118800	148500	178200
34	95200	119000	142800	108800	136000	163200	122400	153000	183600
35	98000	122500	147000	112000	140000	168000	126000	157500	189000
36	100800	126000	151200	115200	144000	172800	129600	162000	194400
37	103600	129500	155400	118400	148000	177600	133200	166500	199800
38	106400	133000	159600	121600	152000	182400	136800	171000	205200
39	109200	136500	163800	124800	156000	187200	140400	175500	210600
40	112000	140000	168000	128000	160000	192000	144000	180000	216000
41	114800	143500	172200	131200	164000	196800	147600	184500	221400
42	117600	147000	176400	134400	168000	201600	151200	189000	226800
43	120400	150500	180600	137600	172000	206400	154800	193500	232200
44	123200	154000	184800	140800	176000	211200	158400	198000	237600
45	126000	157500	189000	144000	180000	216000	162000	202500	243000
46	128800	161000	193200	147200	184000	220800	165600	207000	248400
47	131600	164500	197400	150400	188000	225600	169200	211500	253800
48	134400	168000	201600	153600	192000	230400	172800	216000	259200
49	137200	171500	205800	156800	196000	235200	176400	220500	264600
50	140000	175000	210000	160000	200000	240000	180000	225000	270000
51	142800	178500	214200	163200	204000	244800	183600	229500	275400
52	145600	182000	218400	166400	208000	249600	187200	234000	280800
53	148400	185500	222600	169600	212000	254400	190800	238500	286200
54	151200	189000	226800	172800	216000	259200	194400	243000	291600
55	154000	192500	231000	176000	220000	264000	198000	247500	297000
56	156800	196000	235200	179200	224000	268800	201600	252000	302400
57	159600	199500	239400	182400	228000	273600	205200	256500	307800
58	162400	203000	243600	185600	232000	278400	208800	261000	313200
59	165200	206500	247800	188800	236000	283200	212400	265500	318600
60	168000	210000	252000	192000	240000	288000	216000	270000	324000
61	170800	213500	256200	195200	244000	292800	219600	274500	329400
62	173600	217000	260400	198400	248000	297600	223200	279000	334800
63	176400	220500	264600	201600	252000	302400	226800	283500	340200
64	179200	224000	268800	204800	256000	307200	230400	288000	345600
65	182000	227500	273000	208000	260000	312000	234000	292500	351000
66	184800	231000	277200	211200	264000	316800	237600	297000	356400
67	187600	234500	281400	214400	268000	321600	241200	301500	361800
68	190400	238000	285600	217600	272000	326400	244800	306000	367200
69	193200	241500	289800	220800	276000	331200	248400	310500	372600
70	196000	245000	294000	224000	280000	336000	252000	315000	378000

SECTION 28
FANS

IN THIS CATALOG SECTION

PAGE NUMBER	CONTENTS
28-02	Explanation of Fan Descriptions
28-03	Construction Dimensions
28-04	36" Galvanized & "Z" HYPERMAX Slant Wall Fans & Shutters
28-05	36" Galvanized & "Z" Slant Wall Variable Speed (V-Fan) Direct Drive Fans & Shutters
28-06	48" Galvanized & "Z" HYPERMAX Slant Wall Fans & Shutters
28-07	48" Galvanized & "Z" HYPERMAX Damper Fans
28-08	54" Galvanized & "Z" HYPERMAX Damper Fans
28-09	54" Galvanized HYPERMAX & "Z" Slant Wall Belt Drive 40" Long Cone Fans & Shutters
28-10	54" Galvanized HYPERMAX & "Z" Slant Wall Belt Drive 26" Short Cone Fans & Shutters
28-11	54" Galvanized & "Z" Slant Wall Variable Speed (V-Fan) Direct Drive Fans & Shutters
28-12	12" - 24" PM Fiberglass & Sable Power Miser Direct Drive Fans & Shutters
28-13	24" Fiberglass, Direct Drive Variable Speed (V-Fan) Fans, Cones & Shutters
28-14	36" HYPERMAX Fiberglass & Sable, Direct Drive Fans, Shutters & Cones
28-15	36" HYPERMAX Fiberglass & Sable, Belt Drive Fans, Shutters & Cones
28-16	36" Fiberglass, Direct Drive Variable Speed (V-Fan) Aluminum Blade Fans, Cones & Shutters
28-17	36" Fiberglass, Direct Drive Variable Speed (V-Fan) Galvanized & SS Blade Fans, Cones & Shutters
28-18	50" HYPERMAX Fiberglass & Sable, Belt Drive Fans, Shutters & Cones
28-19	54" HYPERMAX Fiberglass & Sable Single Phase Belt Drive Long Cone Fans & Shutters
28-20	54" HYPERMAX Fiberglass & Sable Three Phase Belt Drive Long Cone Fans & Shutters
28-21 through 28-25	54" HYPERMAX Fiberglass & Sable Belt Drive Short Cone Fans & Shutters
28-26	54" Fiberglass, Direct Drive Variable Speed (V-Fan) Fans & Shutters
28-27	54" HYPERMAX Fiberglass, Belt Drive Exterior Mount Long Cone Fans & Shutters
28-28	MACH 57™ 57" BELT DRIVE DAMPER FANS
28-29	MACH 57™ 57" BELT DRIVE LESS DAMPER FANS
28-30	Box Fans
28-31	Horizontal Air Flow Circulating Fans
28-32	VAL-AIR Horizintal Airflow Fans - Interntional Sales Only
28-33	Pit Fan Adapters and Elbows
28-34	Winter Doors & Wind Diverters
28-35	Light Trap Kits and Transitions
28-36	Hemisphere® Centrifugal Fans & Acc.
28-37	Hemisphere® Directional Centrifugal Fans, "Z" Pro™ Hemisphere® Mixing Fans & Acc.

General Notice About Fan Test Data In this Catalog: Fan test data in this catalog was determined at BESS Lab utilizing standardized testing protocol which includes aluminum shutters where applicable. Testing has shown that fan performance with vinyl shutters will be reduced relative to the published data.

Notice about knock down "KD" fans: **For fans available in KD (unassembled) version must be ordered in quantities of 9 (nine) or more fans. Fans ordered in quantities of 1-8 fans will be automatically shipped assembled, crated, and sold at the assembled fan price.**

Toll-free: 1-800-99VALCO
Phone: (+1) 419-678-8731
Fax: (+1) 419-678-2200

WWW.VAL-CO.COM

FANS
EXPLANATION OF FAN DESCRIPTIONS

DESCRIPTION 1: 54" FAN, W-FG, SLTW, AL BLD, ZP, STD

BLADE DIAMETER / HOUSING MATERIAL / FAN TYPE / BLADE MATERIAL / COMP. MATL. / BLADE SPEED

DESCRIPTION 2: 1.5HP, 230V, 1P, 60, WCN, INT

HORSEPOWER / VOLTAGE / PHASE / FREQUENCY / ACCESSORIES / MOUNT/QTY.

HOUSING MATERIAL

GALV	GALVANIZED
W-FG	WHITE FIBERGLASS
B-FG	BLACK FIBERGLASS
BWFG	BLACK INTERIOR FIBERGLASS WHITE EXTERIOR
ZM	Z FAN

COMPONENT MATERIAL

(Motor Mount and Hardware)

ZP	GALVANIZED MOTOR MOUNT ZINC PLATED HARDWARE
SS	STAINLESS STEEL

FAN TYPE

SLTW	SLANTWALL
DMPR	DAMPER
BOX	BOX
HEMS	HEMISPHERE®
HAF	HORIZONTAL AIRFLOW

MOUNTING, ASSEMBLY, & QUANTITY

INT	INTERIOR MOUNT, ASSEMBLED
EXT	EXTERIOR MOUNT, ASSEMBLED
-KD	KNOCK DOWN - UNASSEMBLED
-Q2	QUANTITY 2 FANS
-Q3	QUANTITY 3 FANS
-Q4	QUANTITY 4 FANS
-Q12	QUANTITY 12 FANS

VOLTAGE

115/230V	115/230V AC
*115/*230V	110-115/220-230V AC
208V	208V AC
230V	230V AC
208-230V	208-230V AC
*230/460V	200-230/460V AC or 208-230/460V AC
230/460V	230/460V AC
220V	220V AC
220/380V	220/380V AC
190/380V	190/380V AC

Refer to catalog item for specific fan voltage

ACCESSORIES

LWG	LESS WIRE GUARD
WWG	WITH WIRE GUARD
LCN	LESS CONE
WCN	WITH CONE
WSC	WITH SHORT CONE
WLC	WITH LONG CONE

ACCESSORIES (new CONE CODE)

COLOR	[B,G,W]	Black, Grey, White
SIZE	[L,S]	Long, Short
MATERIAL	[G,P,Z]	Galvanized, Poly, ZAM

BLADE MATERIAL

AL	ALUMINUM
GV	GALVANIZED
SS	STAINLESS STEEL
CP	COMPOSITE

BLADE SPEED

HE	HIGH EFFICIENCY
STD	STANDARD
HC	HIGH CAPACITY
DD	DIRECT DRIVE
VAR	VARIABLE SPEED

PHASE

1P	SINGLE PHASE
3P	THREE PHASE

FREQUENCY

50	50 HERTZ
60	60 HERTZ

HORSEPOWER

0.25HP	1/4 HORSEPOWER
0.5HP	1/2 HORSEPOWER
1.0HP	1 HORSEPOWER
1.5HP	1-1/2 HORSEPOWER
2.0HP	2 HORSEPOWER
5.0HP	5 HORSEPOWER

Toll-free: 1-800-99VALCO
Phone: (+1) 419-678-8731
Fax: (+1) 419-678-2200

FANS

CONSTRUCTION DIMENSIONS

(in Inches)

	"A"	"B"	"C"	"D"	"E"	"F"	"G"	"H"
12" PM Fan with Cone	22.75	4.75	18.5	32	18.5	18.5		
16" PM Fan with Cone	27.25	5.5	24	34	23	23		
21" PM Fan with Cone	31	5.5	28.75	35	26.5	26.5		
24" PM Fan with Cone	33	5.5	32	38	29	29		
36" FG fan w/ 936174 cone	48.5	3.75	44.5	47	44.75	44.75		
36" FG fan w/ PC36L(B or W) cone	48.5	7	50.25	47	44.75	44.75		
50" FG fan w/ 950188 cone	62.25	0.25	54.25	37.63	56	58		
50" FG fan w/ PC50S(B or W) cone	62.25	8.5	59	39.25	56	58		
50" FG fan w/ FC50LW cone	62.25	8.5	64.5	49.25	56	58		
54" Interior Mount FG fan with long cone	65	8.25	68.88	65.25	61.5	61.5		
54" Interior Mount FG fan with short cone	65	2.5	61.25	38.87	61.5	61.5		
54" Exterior Mount FG fan with long cone	64.4	8.25	68.88	57			65	65
54" Exterior Mount FG fan with short cone	64.4	2.5	61.25	31.25			65	65
36" Sheet Metal Slant Wall Fan	48.5	7.5	49	47	43.5	44.5		
48" Sheet Metal Slant Wall Fan	59.5	8	59.5	60	55.5	55.5		
48" Damper Fan	59	2.5	60.25	51	55.5	55.5		
54" Sheet Metal Slant wall fan w/ 40" Cone	64	11	69	64.5	60	60.25		
54" Sheet Metal Slant wall Fan w/ 26" Cone	64	9	69	51.25	60	60.25		
54" Damper Fan	63.75	4.5	69	55.5	60.25	60.25		
57" Damper Fan	61	5.6	69.5	56	57	57	58.5	58.5
57" Exterior Mount FG Shutter Fan	61	5.6	69.5	56	60	60	61.5	61.5

Damper Fan

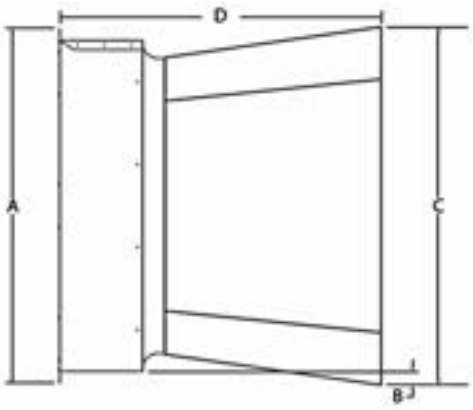

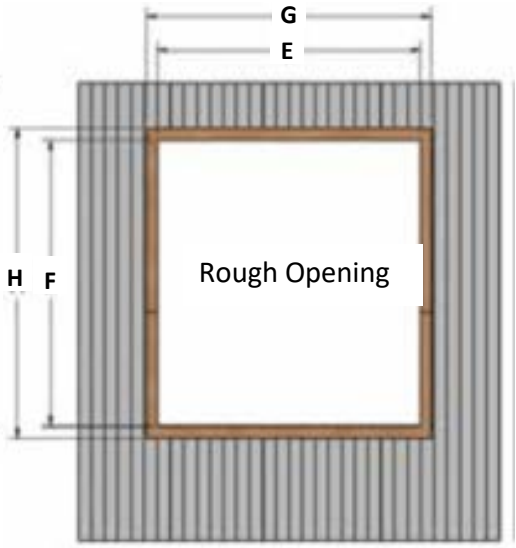

Slant Wall,
Fiberglass & PM

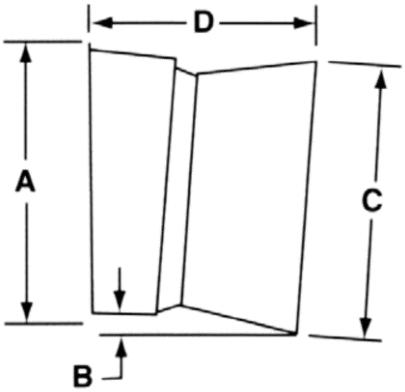

Toll-free: 1-800-99VALCO
Phone: (+1) 419-678-8731
Fax: (+1) 419-678-2200

GALVANIZED AND "Z" FAN SERIES

36" HYPERMAX SLANT WALL FANS

HOW TO ORDER

To order a complete 36" HYPERMAX galvanized slant wall fan with cone, select one each **FAN** and one each **SHUTTER** as needed.

36" HYPERMAX GALV. SLANT WALL FANS WITH CONE, INTERIOR MOUNT - Single Phase Direct Drive

CATALOG NUMBER	Housing	Blade	Motor Mount	Motor / Electric					BESS #	Performance Numbers tested with Aluminum Shutters							SHIP Weight	LIST PRICE EACH
				HP / RPM	Phase	Hertz	Volts	Amps		@ .00" SP	@ .05" SP	@ .10" SP	@ .15" SP	@ .20" SP	@ .25" SP	@ .30" SP	Lbs. / Kg	
										CFM / CFM/W	CFM / CFM/W	CFM / CFM/W	CFM / CFM/W	CFM / CFM/W	CFM / CFM/W	CFM / CFM/W		
936200	Galvanized	Galvanized	Galvanized	0.5 / 850	Single Phase	60 Hz	208-230	3.62 Amps @ 230v @ .30" SP	17092	11,410	10,720	10,010	9,210	8,290	6,720	5,020	37 / 17	
936200-Q2										19.4	17.5	15.8	14.0	12.1	9.3	6.4	44 / 20	

36" HYPERMAX SLANT WALL FANS WITH CONE, INTERIOR MOUNT - Single Phase Belt Drive

936150	Galv.	Galvanized	Galvanized	0.5 / 1725	Single Phase	60 Hz	230 Volts	3.65 Amps @ 230v @ .30" SP	17087	12,200	11,240	10,330	8,830	5,430	3,410	990	36 / 16	
936150-KD																	36 / 16	
936150-Q2																	41 / 19	
936150-ZM	Z*									22.4	19.4	17.0	13.7	7.7	4.4	1.2	41 / 19	
936150-ZM-Q2																	41 / 19	
936155-ZM	Z*	Aluminum Blade	Galvanized	0.5 / 1725	Single Phase	60 Hz	230 Volts	2.71 Amps @ 230v @ .30" SP	16542	11,620	10,910	10,090	9,310	8,160	6,400	4,500	52 / 23	
936155-ZM-Q2										20.0	18.2	16.3	14.9	12.8	10.0	7.2	64 / 29	
936250	Galvanized	Galvanized	Galvanized	1.5 / 1725	Single Phase	60 Hz	230 Volts	6.17 Amps @ 230v @ .30" SP	17088	16,550	16,070	15,420	14,790	14,080	13,340	12,550	187 / 85	
936250-KD																	202 / 92	
936250-Q2										14.6	13.7	12.6	11.7	10.8	9.9	9.0	202 / 92	

36" HYPERMAX SLANT WALL FANS WITH CONE, INTERIOR MOUNT - Three Phase Belt Drive

936270	Galv.	Galvanized	Galvanized	1.0 / 1725	Three Phase	60 Hz	208-230 / 460 Volts	3.12 Amps @ 230v @ .30" SP	22158	14,510	13,820	13,090	12,430	11,690	10,700	9,080	24 / 11	
936270-KD																	29 / 13	
936270-Q2																	29 / 13	
936270-ZM	Z*									17.3	15.8	14.3	13.1	12.0	10.6	8.9	29 / 13	
936270-ZM-Q2																	35 / 16	
936290	Galv.	Galvanized	Galvanized	1.0 / 1425	Three Phase	50 Hz	190/380 Volts	1.74 Amps @ 380v @ .30" SP	22160	14,110	13,430	12,740	11,990	11,180	10,060	7,720	35 / 16	
936290-KD																	35 / 16	
936290-Q2																	41 / 19	
936290-ZM	Z*									17.3	15.7	14.3	13.0	11.8	10.3	7.8	41 / 19	
936290-ZM-Q2																	41 / 19	
936320-ZM	Z*	Aluminum Blade	Galvanized	1.0 / 1725	Three Phase	60 Hz	208-230 / 460 Volts	2.76 Amps @ 230v @ .30" SP	17090	13,200	12,550	11,980	11,270	10,570	9,620	8,270	74 / 33	
936320-ZM-Q2										16.7	15.6	14.5	13.4	12.3	11.1	9.5	74 / 33	
936340-ZM	Z*	Aluminum Blade	Galv.	1.0 / 1425	Three Phase	50 Hz	190/380 Volts	1.62 Amps @ 230v @ .30" SP	16543	13,360	12,800	12,230	11,570	10,910	10,040	8,910	133 / 60	
936340-ZM-Q2										16.5	15.3	14.4	13.2	12.3	11.2	9.9	147 / 67	

*** Z Protective coating used for the fan orifice, housing, and cone. 7 year rust through warranty on housings (Poultry Application).**
KD - Knock Down version is an unassembled fan to save space for Shipping
Q2 - Quantity of 2 fans shipped together assembled to save space and money (requires 2 shutters)

Fan Assembly Jig

950160	Knock Down Fixture for Fan Assembly	231.9 / 105.2	

36" SHUTTERS

CATALOG NUMBER	ITEM DESCRIPTION	OUTSIDE DIMENSIONS HEIGHT x WIDTH	SHUTTER DIMENSIONS HEIGHT X WIDTH	SHIP WGHT. LBS	SHIP WGHT. KGS	LIST PRICE
SPM36W	36" Shutter - White PVC	45.5" x 45.5"	43" x 43"	0.0	0.0	
SPM36B	36" Shutter - Black PVC	45.5" x 45.5"	43" x 43"	3.5	1.6	
SPM36A	36" Shutter - Aluminum	45." x 45."	42" x 42"	0.0	0.0	
936108	Wire Guard in front of Shutter for 36" Fan			141.0	64.0	

Toll-free: 1-800-99VALCO
Phone: (+1) 419-678-8731
Fax: (+1) 419-678-2200

WWW.VAL-CO.COM

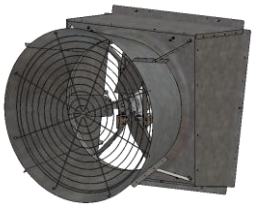

"Z" & GALVANIZED V-FAN SERIES

36" SLANT WALL DIRECT DRIVE V-FANS

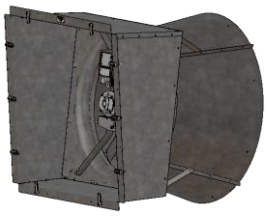

HOW TO ORDER

To order a complete 36" fan, select one each **FAN**, and one each **SHUTTER.**

GALVANIZED BLADE, INTERIOR MOUNT

Catalog Number	Housing	Blade	Motor Mount	Motor	Input Electric: Phase	Input Electric: Hertz	Input Electric: Volts	Input Electric: Amps	BESS #	Blade Speed	Performance Numbers tested at 230v, 60Hz with Aluminum Shutters: @ .00" SP	@ .05" SP	@ .10" SP	@ .15" SP	@ .20" SP	@ .25" SP	@ .30" SP	Ship Weight	LIST PRICE EACH
										RPM	CFM	CFM	CFM	CFM	CFM	CFM	CFM	LBS.	
										Hz	CFM/W	CFM/W	CFM/W	CFM/W	CFM/W	CFM/W	CFM/W	KGS	
936260-1	Galvanized	Galvanized	Galvanized	.75 HP	Single Phase	60 Hz / 50 Hz	200-240 Volts	4.95 Amps @ .30" SP	20202	912	11,860	11,370	10,830	10,230	9,590	8,940	8,040	218	
										76	26.5	23.6	21.1	18.7	16.5	14.7	12.2	99	
936260-1-Q2										780	10,320	9,710	8,990	8,250	7,310	5,480	4,310	12	
										65	34.3	29.7	25.2	21.5	17.7	12.0	8.5	5	
936260-ZM-1	Z' Material									660	8,780	8,010	7,100	5,960	3,780	2,550	800	18	
										55	44.5	36.1	28.8	22.1	11.8	7.1	2.2	8	
936260-ZM-1-Q2										540	7,100	6,110	4,580	2,100				18	
										45	56.8	43.0	27.6	10.2				8	
936260-3	Galvanized	Galvanized	Galvanized	.75 HP	Single Phase	60 Hz / 50 Hz	200-240 Volts	2.53 Amps @ .30" SP	20199	912	11,830	11,340	10,790	10,210	9,530	8,870	7,960	12	
										76	27.0	23.9	21.2	18.8	16.6	14.7	12.5	5	
936260-3-Q2										780	10,340	9,720	8,990	8,200	7,290	5,360	4,140	18	
										65	34.9	30.1	25.6	21.2	18.1	11.8	8.2	8	
936260-3-KD										660	8,810	8,060	7,110	5,860	3,810	2,510	1,270	12	
										55	45.6	37.0	28.9	22.3	12.0	7.0	3.2	5	
936260-ZM-3	Z' Material									540	7,110	6,110	4,380	2,060				24	
										45	58.2	44.0	27.4	9.8				11	
936260-ZM-3-Q2																		24	
																		11	

*** Z Protective coating used for the fan orifice, housing, and cone. 7 year rust through warranty on housings (Poultry Application).**
Q2 - Quantity of 2 fans shipped together assembled to save space and money (requires 2 shutters)

Fan Assembly Jig

950160	Knock Down Fixture for Fan Assembly	231.9 / 105	

36" SHUTTERS

CATALOG NUMBER	ITEM DESCRIPTION	OUTSIDE DIMENSIONS HEIGHT x WIDTH	SHUTTER DIMENSIONS HEIGHT X WIDTH	SHIP WEIGHT LBS.	SHIP WEIGHT KGS	LIST PRICE
SPM36W	36" Shutter - White PVC	45.5" x 45.5"	43" x 43"	0	0.0	
SPM36B	36" Shutter - Black PVC	45.5" x 45.5"	43" x 43"	4	1.6	
SPM36A	36" Shutter - Aluminum	45." x 45."	42" x 42"	0	0.0	
936108	Wire Guard in front of Shutter for 36" Fan			141	64.0	

Toll-free: 1-800-99VALCO
Phone: (+1) 419-678-8731
Fax: (+1) 419-678-2200

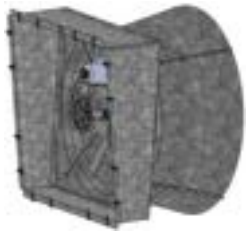

GALVANIZED AND "Z" FAN SERIES - BELT DRIVE

48" HYPERMAX SLANT WALL FANS

HOW TO ORDER

To order a complete 48" HYPERMAX galvanized slant wall fan with cone, select one each **FAN** and one each **SHUTTER** as needed.

48" HYPERMAX SLANT WALL FANS WITH CONE, INTERIOR MOUNT - Single Phase Belt Drive

CATALOG NUMBER	Housing	Blade	Motor Mount	Motor / Electric					BESS #	Performance Numbers tested with Aluminum Shutters							SHIP Weight	LIST PRICE EACH
				HP / RPM	Phase	Hertz	Volts	Amps		@ .00" SP	@ .05" SP	@ .10" SP	@ .15" SP	@ .20" SP	@ .25" SP	@ .30" SP		
										CFM	CFM	CFM	CFM	CFM	CFM	CFM	Lbs. / Kg	
										CFM/W	CFM/W	CFM/W	CFM/W	CFM/W	CFM/W	CFM/W		
948200	Galvanized	Galvanized	Galvanized	1.5 / 1725	Single	60 Hz	230	5.83 A @ 230v @ .30" SP	12704	25,500	24,400	23,200	21,600	19,900	17,900	15,500	88 / 40	
948200-KD										22.4	20.7	19.0	17.2	15.5	13.7	11.6	88 / 40	
HGS48G340MGAT	Galv.	Galvanized	Galvanized	1.5 / 1725	Single	60 Hz	230	6.36 A @ 230v @ .30" SP	12703	26,400	25,200	23,900	22,600	20,900	19,000	16,800	/	
HGS48G340MGAT-ZM	Z*									20.5	20.2	17.7	16.9	15.1	13.3	11.6	/	
HGS48G340NGAT	Galvanized	Galvanized	Galvanized	1.5 / 1725	Single	60 Hz	230	5.34 A @ 230v @ .30" SP	12705	24,800	23,600	22,200	20,600	18,600	16,300	12,300	/	
										23.7	21.7	19.8	17.9	15.8	13.5	10.2		

48" HYPERMAX SLANT WALL FANS WITH CONE, INTERIOR MOUNT - Three Phase Belt Drive

HGS48G650LGAT	Galvanized	Galvanized	Galvanized	1.5 / 1725	Three	60 Hz	200-230/460	-	05208	25,900	24,800	23,500	22,200	20,700	18,900	17,000	/	
										22.4	20.3	18.2	16.4	14.6	12.9	11.1		

*** Z Protective coating used for the fan orifice, housing, and cone. 7 year rust through warranty on housings (Poultry Application).**

KD - Knock Down version is an unassembled fan to save space for Shipping

Fan Assembly Jig

950160	Knock Down Fixture for Fan Assembly	231.9 / 105.2	

48" SHUTTERS

CATALOG NUMBER	ITEM DESCRIPTION	OUTSIDE DIMENSIONS HEIGHT x WIDTH	SHUTTER DIMENSIONS HEIGHT x WIDTH	SHIP WGHT.		List Price
				LBS.	KGS	
SPM48W	48" Shutter - White PVC	57" x 57"	54.5" x 54.5"	0.0	0.0	
SPM48B	48" Shutter - Black PVC	57" x 57"	54.5" x 54.5"	0.0	0.0	
SPM48A	48" Shutter - Aluminum	57" x 57"	54" x 54"	6.1	2.8	
948108	Wire Guard in front of Shutter for 48" Fan			#N/A	#N/A	

Toll-free: 1-800-99VALCO
Phone: (+1) 419-678-8731
Fax: (+1) 419-678-2200

GALVANIZED AND "Z" FAN SERIES - BELT DRIVE

48" HYPERMAX DAMPER FAN SERIES

Fan Comes Complete with Damper and Cone

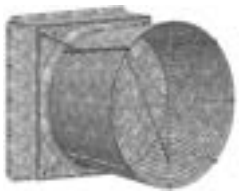

48" DAMPER FANS WITH CONE, INTERIOR MOUNT

CATALOG NUMBER	Housing	Blade	Motor Mount	Motor / Electric					BESS #	@ .00" SP	@ .05" SP	@ .10" SP	@ .15" SP	@ .20" SP	@ .25" SP	@ .30" SP	SHIP Weight	LIST PRICE EACH
				HP / RPM	Phase	Hertz	Volts	Amps		CFM	CFM	CFM	CFM	CFM	CFM	CFM	Lbs. / Kg	
										CFM/W	CFM/W	CFM/W	CFM/W	CFM/W	CFM/W	CFM/W		
948320	Galv.	Galvanized	Galvanized	1.5 / 1725	Single Phase	60 Hz	230 Volts	5.99 A @ 230v @ .30" SP	12723	25,600	24,200	22,700	20,900	19,000	17,000	14,900	63 / 29	
948320-KD																	63 / 29	
948320-ZM	Z*									21.8	19.8	17.9	16.1	14.2	12.5	10.9	63 / 29	

*** Z Protective coating used for the fan orifice, housing, and cone. 7 year rust through warranty on housings (Poultry Application).**
KD - Knock Down version is an unassembled fan to save space for Shipping

Fan Assembly Jig

950160	Knock Down Fixture for Fan Assembly	231.9 / 105.2	

Toll-free: 1-800-99VALCO
Phone: (+1) 419-678-8731
Fax: (+1) 419-678-2200

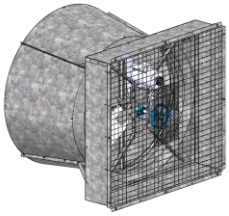

GALVANIZED AND "Z" FAN SERIES - BELT DRIVE

54" HYPERMAX DAMPER FAN SERIES

Fan Comes Complete with Damper and Cone

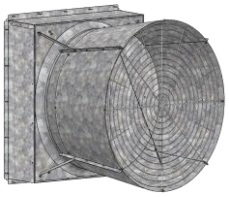

54" DAMPER FANS WITH CONE, INTERIOR MOUNT - Single Phase 60Hz

CATALOG NUMBER	Housing	Blade	Motor Mount	Motor / Electric HP / RPM	Phase	Hertz	Volts	Amps	BESS #	@ .00" SP CFM / CFM/W	@ .05" SP CFM / CFM/W	@ .10" SP CFM / CFM/W	@ .15" SP CFM / CFM/W	@ .20" SP CFM / CFM/W	@ .25" SP CFM / CFM/W	@ .30" SP CFM / CFM/W	SHIP Weight Lbs. / Kg	LIST PRICE EACH
954430	Galv.	Galvanized	Galvanized	1.5 / 1725	Single Phase	60 Hz	230 Volts	6.22A @ 230v @ .25" SP	17066	29,600	27,700	25,700	23,200	20,700	17,900	14,500	/	
954430-ZM	Z*									23.7	21.1	18.9	17.0	14.8	12.7	10.3	/	
954440	Galv.	Galvanized	Galvanized	1.5 / 1725	Single Phase	60 Hz	230 Volts	6.82A @ 230v @ .30" SP	17065	30,700	28,900	27,000	24,700	22,300	19,700	16,900	/	
954440-KD																	/	
954440-ZM	Z*									23.2	20.8	18.7	16.8	14.8	12.9	11.0	/	
954500-ZM	Z*	Aluminum	Galv.	1.5 / 1725	Single Phase	60 Hz	230 Volts	5.99A @ 230v @ .25" SP	17064	29,200	27,700	25,600	22,900	20,100	16,500	11,500	/	
										25.1	22.4	20.0	17.3	14.9	12.1	8.8		

54" DAMPER FANS WITH CONE, INTERIOR MOUNT - Three Phase 60Hz

954460	Galv.	Galvanized	Galvanized	1.5 / 1725	Three Phase	60 Hz	208-230/460	4.99A @ 230v @ .30" SP	17070	31,200	29,500	27,500	25,600	23,300	20,900	18,200	/	
954460-KD																	/	
954460-ZM	Z*									23.4	20.8	18.5	16.7	14.7	12.9	11.0	/	
954460-ZM-KD																	/	
954550	Galv.	Galvanized	Galvanized	2.0 / 1725	Three Phase	60 Hz	208-230/460	6.43A @ 230v @ .30" SP	-	33,700	32,000	30,400	28,600	26,600	24,300	22,100	/	
954550-ZM	Z*									19.2	17.3	15.9	14.5	13.3	11.9	10.8	/	
954530-ZM	Z*	Aluminum	Galv.	1.5 / 1725	Three Phase	60 Hz	208-230/460	5.39A @ 230v @ .30" SP	17069	33,400	31,000	28,900	26,500	24,100	21,300	18,200	11 / 5	
										21.9	19.4	17.3	15.4	13.7	11.9	10.1		

54" DAMPER FANS WITH CONE, INTERIOR MOUNT - Three Phase 50Hz

954470	Galv.	Galvanized	Galvanized	1.5 / 1425	Three Phase	50 Hz	190/380 Volts	2.38A @ 380v @ .30" SP	17071	28,700	26,800	24,800	22,300	19,800	17,100	13,700	/	
954470-KD																	/	
954470-ZM	Z*									26.0	23.1	20.5	17.8	15.3	12.9	10.3	/	
954540-ZM	Z*	Aluminum	Galv.	1.5 / 1425	Three Phase	50 Hz	190/380 Volts	2.52A @ 380v @ .25" SP	17072	30,700	28,200	26,000	23,300	20,400	17,400	11,900	/	
										24.7	21.4	19.0	16.6	14.1	12.1	8.6		

*** Z Protective coating used for the fan orifice, housing, and cone. 7 year rust through warranty on housings (Poultry Application).**
KD - Knock Down version is an unassembled fan to save space and weight for Shipping

Fan Assembly Jig

950160	Knock Down Fixture for Fan Assembly	231.9 / 105.2	

Toll-free: 1-800-99VALCO
Phone: (+1) 419-678-8731
Fax: (+1) 419-678-2200

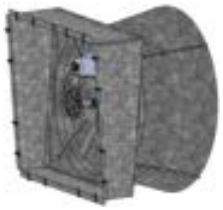

GALVANIZED & "Z" FAN SERIES - BELT DRIVE

54" HYPERMAX SLANT WALL FAN SERIES

HOW TO ORDER

To order a complete 54" HYPERMAX galvanized slant wall fan with cone,
Select one each **FAN** and one each **SHUTTER** as needed.

54" HYPERMAX SLANT WALL FANS WITH 40" LONG CONE, INTERIOR MOUNT - Single Phase 60Hz

CATALOG NUMBER	Housing	Blade	Motor Mount	Motor / Electric HP / RPM	Phase	Hertz	Volts	Amps	BESS #	Performance Numbers tested with Aluminum Shutters @ .00" SP CFM / CFM/W	@ .05" SP CFM / CFM/W	@ .10" SP CFM / CFM/W	@ .15" SP CFM / CFM/W	@ .20" SP CFM / CFM/W	@ .25" SP CFM / CFM/W	@ .30" SP CFM / CFM/W	SHIP Weight Lbs. / Kg	LIST PRICE EACH
954710	Galv.	Galvanized	Galvanized	1.5 / 1725	Single	60 Hz	230 Volts	5.89A @ 230v @ .30" SP	16539	29,900	28,700	27,000	24,700	22,500	19,200	14,100	/	
										25.5	23.8	21.6	19.1	17.1	14.4	10.5		
954710-ZM	Z*																/	
954720	Galv.	Galvanized	Galvanized	1.5 / 1725	Single	60 Hz	230 Volts	7.09A @ 230v @ .30" SP	16538	31,800	30,500	29,000	27,100	24,900	22,200	19,100	2 / 1	
										23.3	21.4	19.6	17.7	15.9	13.9	11.9		
954720-ZM	Z*																/	
954725-ZM	Z*	Aluminum	Galvanized	1.5 / 1725	Single	60 Hz	230 Volts	5.91A @ 230v @ .25" SP	17057	30,800	29,300	27,300	24,800	22,300	19,000	9,900	1 /	
										27.4	24.8	22.1	19.2	16.8	14.0	7.3		

54" HYPERMAX SLANT WALL FANS WITH 40" LONG CONE, INTERIOR MOUNT - Three Phase 60Hz

954730	Galv.	Galvanized	Galvanized	1.5 / 1725	Three	60 Hz	208-230 / 460	4.80A @ 230v @ .30" SP	16531	31,900	30,400	29,000	27,100	25,100	22,400	19,100	1 /	
										24.0	21.9	20.2	18.3	16.5	14.4	12.2		
954730-ZM	Z*																1 /	
954735-ZM	Z*	Aluminum	Galvanized	1.5 / 1725	Three	60 Hz	208-230 / 460	4.90A @ 230v @ .30" SP	17056	32,700	31,200	29,400	27,200	24,700	21,900	17,600	2 / 1	
										24.9	22.6	20.4	18.1	16.0	13.9	11.0		
954770	Galv.	Galvanized	Galvanized	2.0 / 1725	Three	60 Hz	208-230 / 460	5.72A @ 230v @ .30" SP	22151	34,100	32,700	31,200	29,800	28,000	25,900	23,600	2 / 1	
										20.5	18.7	17.4	16.2	14.8	13.3	11.9		
954770-ZM	Z*																1 / 1	

54" HYPERMAX SLANT WALL FANS WITH 40" LONG CONE, INTERIOR MOUNT - Three Phase 50Hz

954750	Galv.	Galvanized	Galvanized	1.5 / 1425	Three	50 Hz	190 / 380	2.55A @ 380v @ .30" SP	16540	30,200	28,900	27,100	25,400	23,200	20,100	16,000	2 / 1	
954750-KD																	2 / 1	
954750-ZM	Z*									23.5	21.9	19.7	18.0	16.1	13.8	11.0	2 / 1	

*** Z Protective coating used for the fan orifice, housing, and cone. 7 year rust through warranty on housings (Poultry Application).**
KD - Knock Down version is an unassembled fan to save space and weight for Shipping

Fan Assembly Jig

950160	Knock Down Fixture for Fan Assembly	231.9 / 105.2	

54" SHUTTERS

CATALOG NUMBER	ITEM DESCRIPTION	OUTSIDE DIMENSIONS HEIGHT x WIDTH	SHUTTER DIMENSIONS HEIGHT X WIDTH	SHIP WEIGHT LBS	SHIP WEIGHT KGS	LIST PRICE
SPM54W	54" Shutter - White PVC	61.5" x 61.5"	59" x 59"	0.0	0.0	
SPM54B	54" Shutter - Black PVC	61.5" x 61.5"	59" x 59"	0.0	0.0	
SPM54A	54" Shutter - Aluminum	61.35" x 61.35"	58.25" x 58.25"	0.0	0.0	
954108	Wire Guard in front of Shutter for 54" Fan			0.0	0.0	

Toll-free: 1-800-99VALCO
Phone: (+1) 419-678-8731
Fax: (+1) 419-678-2200

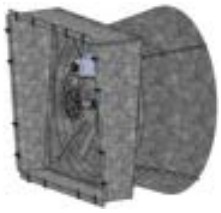

GALVANIZED & "Z" FAN SERIES - BELT DRIVE

54" HYPERMAX SLANT WALL FAN SERIES

HOW TO ORDER

To order a complete 54" HYPERMAX slant wall fan with cone,
Select one each **FAN** and one each **SHUTTER** as needed.

54" HYPERMAX SLANT WALL FANS WITH 26" SHORT CONE, INTERIOR MOUNT - Single Phase 60Hz

CATALOG NUMBER	Housing	Blade	Motor Mount	Motor / Electric HP / RPM	Phase	Hertz	Volts	Amps	BESS #	Performance Numbers tested with Aluminum Shutters @ .00" SP CFM / CFM/W	@ .05" SP CFM / CFM/W	@ .10" SP CFM / CFM/W	@ .15" SP CFM / CFM/W	@ .20" SP CFM / CFM/W	@ .25" SP CFM / CFM/W	@ .30" SP CFM / CFM/W	SHIP Weight Lbs. / Kg	LIST PRICE EACH
954290	Galv.	Galvanized	Galvanized	1.5 / 1725	Single Phase	60 Hz	230 Volts	5.96 Amps @ 230v @ .25" SP	16534	29,700	28,200	26,500	24,600	22,400	19,200	13,900	/	
954290-KD																	103 / 46	
954290-ZM	Z*									25.2	22.8	20.8	18.9	16.8	14.1	10.2	/	
954350	Galv.	Galvanized	Galvanized	1.5 / 1725	Single Phase	60 Hz	230 Volts	7.17 Amps @ 230v @ .30" SP	16535	31,000	29,900	28,100	26,200	24,300	22,000	18,000	52 / 24	
954350-KD																	/	
954350-ZM	Z*									22.2	20.6	18.7	17.0	15.5	13.8	11.1	68 / 31	

54" HYPERMAX SLANT WALL FANS WITH 26" SHORT CONE, INTERIOR MOUNT - Three Phase 60Hz

954310	Galv.	Galvanized	Galvanized	1.5 / 1725	Three Phase	60 Hz	208-230 / 460	4.85 Amps @ 230v @ .30" SP	16532	31,200	29,800	28,300	26,300	24,500	22,000	17,900	107 / 49	
954310-KD																	/	
954310-ZM	Z*									23.0	21.0	19.4	17.5	15.9	14.1	11.3	126 / 57	

54" HYPERMAX SLANT WALL FANS WITH 26" SHORT CONE, INTERIOR MOUNT - Three Phase 50Hz

954400	Galv.	Galvanized	Galvanized	1.5 / 1425	Three Phase	50 Hz	190 / 380	2.54 Amps @ 380v @ .30" SP	16533	30,100	28,800	26,900	24,900	22,900	20,200	15,800	/	
954400-KD																	42 / 19	
954400-ZM	Z*									23.4	21.8	19.6	17.6	16.0	13.9	10.9	4 / 2	
954400-ZM-KD																	7 / 3	

*** Z Protective coating used for the fan orifice, housing, and cone. 7 year rust through warranty on housings (Poultry Application).**
KD - Knock Down version is an unassembled fan to save space and weight for Shipping

Fan Assembly Jig

950160	Knock Down Fixture for Fan Assembly	231.9 / 105.2	

54" SHUTTERS

CATALOG NUMBER	ITEM DESCRIPTION	OUTSIDE DIMENSIONS HEIGHT x WIDTH	SHUTTER DIMENSIONS HEIGHT X WIDTH	SHIP WEIGHT LBS.	SHIP WEIGHT KGS	LIST PRICE
SPM54W	54" Shutter - White PVC	61.5" x 61.5"	59" x 59"	0.0	0.0	
SPM54B	54" Shutter - Black PVC	61.5" x 61.5"	59" x 59"	0.0	0.0	
SPM54A	54" Shutter - Aluminum	61.35" x 61.35"	58.25" x 58.25"	0.0	0.0	
954108	Wire Guard in front of Shutter for 54" Fan			0.0	0.0	

Toll-free: 1-800-99VALCO
Phone: (+1) 419-678-8731
Fax: (+1) 419-678-2200

GALVANIZED AND "Z" DIRECT DRIVE FAN SERIES

54" SLANT WALL DIRECT DRIVE V-FANS

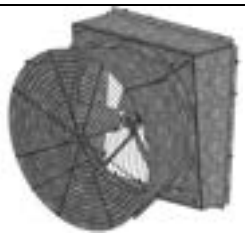

HOW TO ORDER

To order a complete 54" Galvanized or "Z" V-Fan, select one each **FAN**, and one each **SHUTTER.**

54" SLANT WALL V-FANS WITH 26" CONE, INTERIOR MOUNT

CATALOG NUMBER	HOUSING/ BLADE/ MTR MOUNT/ MOTOR				INPUT ELECTRIC Phase	Hertz	Volts	Amps	BESS #	BLADE SPEED RPM / Hz	Performance Numbers tested at 230v, 60Hz with Aluminum Shutters @ .00" SP CFM / CFM/W	@ .05" SP CFM / CFM/W	@ .10" SP CFM / CFM/W	@ .15" SP CFM / CFM/W	@ .20" SP CFM / CFM/W	@ .25" SP CFM / CFM/W	@ .30" SP CFM / CFM/W	SHIP Weight LBS. / KGS	LIST PRICE EACH
954260-1	Galvanized	Galvanized Blade	Galvanized Motor Mount	2.0 HP Fan Motor	Single Phase	50/60 Hz	200-240 Volts	5.1 Amps @ .30" SP	22152	602	33,400	32,100	30,800	29,300	27,800	26,000	23,800	33	
										50 Hz	22.4	20.6	19.0	17.5	16.1	14.6	12.9		
										482	27,300	25,700	23,600	21,300	18,700	14,600	6,800	15	
										40 Hz	34.1	30.1	26.2	22.5	19.0	14.5	6.4		
954260-ZM-1	Z Material*									361	20,300	17,600	14,200	6,000				0.0	
										30 Hz	55.3	44.3	33.5	13.4					
										301	16,500	12,500	4,100					0.0	
										25 Hz	72.6	50.6	14.9						
954260-3	Galvanized	Galvanized Blade	Galvanized Motor Mount	2.0 HP Fan Motor	Three Phase	50/60 Hz	200-240 Volts	5.1 Amps @ .30" SP	22153	602	33,500	32,000	30,800	29,300	27,800	26,000	23,800	0.0	
										50 Hz	22.8	20.8	19.2	17.7	16.2	14.8	13.1		
954260-3-KD										482	27,400	25,800	23,600	21,400	18,800	13,800	7,000	0.0	
										40 Hz	34.5	30.6	26.4	22.9	19.4	13.9	6.7		
954260-ZM-3	Z Material*									361	20,200	17,500	14,200	5,600				62.9	
										30 Hz	55.2	43.7	34.0	12.3					
										302	16,300	12,500	4,200					28.5	
										25 Hz	72.7	51.5	15.1						

54" SLANT WALL V-FANS WITH 40" CONE, INTERIOR MOUNT

954705-1	Galvanized	Galvanized Blade	Galvanized Motor Mount	2.0 HP Fan Motor	Single Phase	50/60 Hz	200-240 Volts	12.7 Amps @ .30" SP	19459	602	34,700	33,500	32,200	30,900	29,200	27,300	25,100	0.9	
										50 Hz	21.9	20.1	18.6	17.4	15.9	14.6	12.9		
										482	28,400	26,700	24,900	22,700	19,700	16,300	7,200	0.4	
										40 Hz	34.0	30.0	26.0	23.5	19.4	15.8	6.9		
954705-ZM-1	Z Material*									361	21,000	18,700	15,400	6,400				0.7	
										30 Hz	55.8	49.0	35.7	13.9					
										301	17,100	13,900	4,700					0.3	
										25 Hz	72.8	54.2	17.7						
954705-3	Galvanized	Galvanized Blade	Galvanized Motor Mount	2.0 HP Fan Motor	Three Phase	50/60 Hz	200-240 Volts	6.7 Amps @ .30" SP	19461	599	34,700	33,400	32,100	30,700	29,100	27,100	24,800	1	
										50 Hz	22.7	21.1	19.0	17.6	16.4	14.7	13.2	0	
954705-3-KD										480	28,400	26,600	24,800	22,500	19,500	16,300		1	
										40 Hz	34.6	29.8	27.0	25.0	19.7	16.2		0	
954705-ZM-3	Z Material*									359	20,800	18,600	15,300	6,200				0.8	
										30 Hz	71.0	57.2	36.4	14.1					
										299	17,000	13,800	4,000					0.4	
										25 Hz	114.0	62.7	16.9						

*** Z Protective coating used for the fan orifice, housing, and cone. 7 year rust through warranty on housings (Poultry Application).**
KD - Knock Down version is an unassembled fan to save space and weight for Shipping

Fan Assembly Jig

950160	Knock Down Fixture for Fan Assembly	231.9 / 105	

54" SHUTTERS

CATALOG NUMBER	ITEM DESCRIPTION	OUTSIDE DIMENSIONS HEIGHT x WIDTH	SHUTTER DIMENSIONS HEIGHT X WIDTH	SHIP WEIGHT LBS.	SHIP WEIGHT KGS	LIST PRICE
SPM54W	54" Shutter - White PVC	61.5" x 61.5"	59" x 59"	0.0	0.0	
SPM54B	54" Shutter - Black PVC	61.5" x 61.5"	59" x 59"	0.0	0.0	
SPM54A	54" Shutter - Aluminum	61.35" x 61.35"	58.25" x 58.25"	0.0	0.0	
954108	Wire Guard in front of Shutter for 54" Fan			0.0	0.0	

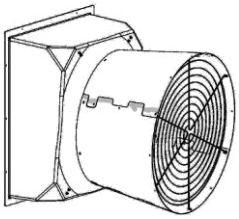

FIBERGLASS PM POWER MISER FAN SERIES
12" - 24" DIRECT DRIVE FANS

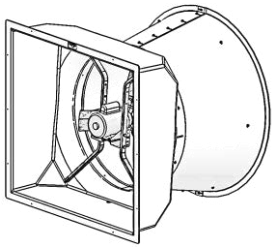

HOW TO ORDER

To order a complete 12 through 24" fiberglass PM fan
Select one each FAN , one each SHUTTER and one each CONE.

PM FIBERGLASS FANS, INTERIOR MOUNT

CATALOG NUMBER	Housing	Blade	Motor Mount	Motor / Electric					BESS #	Performance Numbers tested with Plastic Shutters							SHIP Weight	LIST PRICE EACH
				HP / RPM	Phase	Hertz	Volts	Amps		@ .00" SP	@ .05" SP	@ .10" SP	@ .15" SP	@ .20" SP	@ .25" SP	@ .30" SP		
										CFM / CFM/W	CFM / CFM/W	CFM / CFM/W	CFM / CFM/W	CFM / CFM/W	CFM / CFM/W	CFM / CFM/W	Lbs. / Kg	
PM12W140MPA	White	Poly	SS	.25 / 1625	Single	60 Hz	230	.97 A @ .30" SP	-	1,910 / 9.3	1,810 / 8.8	1,720 / 8.4	1,600 / 7.5	1,420 / 6.6	490 / 2.4	420 / 2.0	/	
PM16W140MPA	White	Poly	Stainless Steel	.25 / 1625	Single Phase	60 Hz	230	1.23A @ 230v @ .30" SP	-	3,050 / 12.6	2,940 / 11.9	2,790 / 10.9	2,620 / 10.0	2,430 / 9.1	2,210 / 8.1	1,890 / 7.0	/	
PM16W140MPA-BW	Black	Poly	Stainless Steel	.25 / 1625	Single Phase	60 Hz	230	1.23A @ 230v @ .30" SP	-	12.6	11.9	10.9	10.0	9.1	8.1	7.0	/	
PM21W190LPA	White	Poly	Stainless Steel	0.5 / 1725	Single Phase	60 Hz	230	1.19A @ 230v 1.19 @ .30" SP	23215	5,580 / 11.0	5,390 / 10.6	5,200 / 9.9	4,980 / 9.5	4,780 / 8.8	4,530 / 8.3	4,280 / 7.9	/	
PM21W190LPA-BW	Black	Poly	Stainless Steel	0.5 / 1725	Single Phase	60 Hz	230	1.19A @ 230v 1.19 @ .30" SP	23215	11.0	10.6	9.9	9.5	8.8	8.3	7.9	/	
PM24W210MPA	White	Poly	Stainless Steel	0.5 / 1100	Single Phase	60 Hz	230	1.97A @ 230v @ .30" SP	18069	6,480 / 14.1	6,120 / 13.2	5,710 / 12.4	5,230 / 11.4	4,550 / 10.1	2,870 / 6.6	1,300 / 2.8	/	
PM24W210MPA-BW	Black	Poly	Stainless Steel	0.5 / 1100	Single Phase	60 Hz	230	1.97A @ 230v @ .30" SP	18069	14.1	13.2	12.4	11.4	10.1	6.6	2.8	/	
924025	W	Poly	Stainless Steel	.5 / 1140	Three Phase	60Hz	230 / 460	2.26 A @ 230v @ .30" SP	23213	7,010 / 13.3	6,720 / 12.3	6,360 / 11.7	5,980 / 11.0	5,510 / 10.1	4,970 / 9.5	3,320 / 6.8	122 / 55	
924025-BW	B	Poly	Stainless Steel	.5 / 1140	Three Phase	60Hz	230 / 460	2.26 A @ 230v @ .30" SP	23213	13.3	12.3	11.7	11.0	10.1	9.5	6.8	122 / 55	
924025	W	Poly	Stainless Steel	.5 / 950	Three Phase	50Hz	190 / 380	2.15 A @ 190v @ .30" SP	23214	5,830 / 17.5	5,390 / 16.2	4,930 / 14.8	4,300 / 12.9	2,720 / 8.6	2,220 / 6.7	1,690 / 4.7	122 / 55	
924025-BW	B	Poly	Stainless Steel	.5 / 950	Three Phase	50Hz	190 / 380	2.15 A @ 190v @ .30" SP	23214	17.5	16.2	14.8	12.9	8.6	6.7	4.7	122 / 55	

BW - Sable fan has a White exterior housing and a black interior housing.

PM SHUTTERS

CATALOG NUMBER	ITEM DESCRIPTION	OUTSIDE DIMENSIONS HEIGHT x WIDTH	SHUTTER DIMENSIONS HEIGHT x WIDTH	SHIP WGHT. LBS	SHIP WGHT. KGS	LIST PRICE
SPM12W	PMC 12" Shutter - White PVC	20.0" x 20.0"	17.5" x 17.5"	22.3	10.1	
SPM12B	PMC 12" Shutter - Black PVC			22.3	10.1	
SPM16W	PMC16" Shutter - White PVC	24.38" x 24.38"	21.87" x 21.87"	0.5	0.2	
SPM16B	PMC 16" Shutter - Black PVC			22.3	10.1	
SPM21W	PMC 21" Shutter - White PVC	28.0" x 28.0"	25.5" x 25.5"	0.0	0.0	
SPM21B	PMC 21" Shutter - Black PVC			3.1	1.4	
SPM24W	PMC 24" Shutter - White PVC	30.25" x 30.25"	27.75" x 27.75"	0.0	0.0	
SPM24B	PMC 24" Shutter - Black PVC			3.1	1.4	

PM POLY CONES

912174	12" Panel Cone, 1 section with grill, White	0.0	0.0	
PC12LW	12" Poly Cone, 1 section with grill, White	0.0	0.0	
PC12LB	12" Poly Cone, 1 section with grill, Black	0.0	0.0	
916174	16" Panel Cone, 2 sections with grill, White	0.0	0.0	
PC16LW	16" Poly Cone, 1 section with grill, White	0.0	0.0	
PC16LB	16" Poly Cone, 1 section with grill, Black	0.0	0.0	
921081	21" Panel Cone, 2 sections with grill, White	4.0	1.8	
PC21LW	21" Poly Cone Kit, with grill, White	0.0	0.0	
PC21LB	21" Poly Cone Kit, with grill, Black	0.0	0.0	
924174	24" Panel Cone, 2 sections with grill, White	154.6	70.1	
PC24LW	24" Poly Cone Kit, with grill, White	0.0	0.0	
PC24LB	24" Poly Cone Kit, with grill, Black	0.0	0.0	
MH94203	Hardware Bag - 12"-24" PM Cones only, SS Hardware- (Already included in with Fans)	0.0	0.0	

Hardware not included with cone kits. Hardware needed for cone kits comes with the fan. If ordering a cone kit without a fan, order a hardware bag separately.

Toll-free: 1-800-99VALCO
Phone: (+1) 419-678-8731
Fax: (+1) 419-678-2200

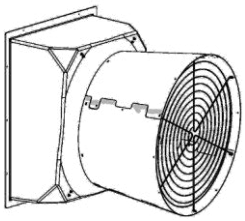

FIBERGLASS V-FAN SERIES

24" SLANT WALL DIRECT DRIVE V-FANS

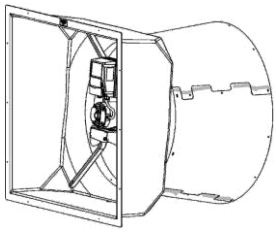

HOW TO ORDER

To order a complete 24" Hypermax fiberglass fan, select one **FAN**, one **CONE** & one **SHUTTER.**

ALUMINUM BLADE, INTERIOR MOUNT

CATALOG NUMBER	Housing	Blade	Mtr Mount	Motor	INPUT ELECTRIC Phase	Hertz	Volts	Amps	BESS #	BLADE SPEED RPM Hz	Performance Numbers tested at 230v, 60Hz with Plastic Shutters @ .00" SP CFM CFM/W	@ .05" SP CFM CFM/W	@ .10" SP CFM CFM/W	@ .15" SP CFM CFM/W	@ .20" SP CFM CFM/W	@ .25" SP CFM CFM/W	@ .30" SP CFM CFM/W	SHIP Weight LBS. KGS	LIST PRICE EACH
924030-SSHW-1	White Fiberglass	Composite Blade	Stainless Steel	.75 HP Fan Motor	Single Phase	50 / 60 Hz	200-240 Volts	5.91 Amps @ .40" SP	24681	1088	7,660	7,470	7,270	7,080	6,890	6,660	6,440	133	
										90Hz	12.0	11.4	10.8	10.2	9.7	9.1	8.6		
										967	6,790	6,570	6,330	6,100	5,870	5,610	5,310		
										80Hz	15.1	13.9	13.0	12.1	11.3	10.5	9.8		
										846	5,910	5,650	5,380	5,100	4,800	4,360	3,830		
										70Hz	19.1	17.4	15.9	14.5	13.3	11.7	10.0		
										726	4,950	4,630	4,320	3,930	3,260	2,600	1,980	60	
										60Hz	24.5	21.4	18.9	16.5	13.5	10.2	7.0		
										665	4,490	4,150	3,730	3,030	2,420	1,850	1,280		
										55Hz	28.4	24.0	20.2	15.8	12.2	8.3	5.5		
										545	3,530	2,960	2,280	1,550	950				
										45Hz	36.4	27.9	20.0	12.1	6.9				

PM SHUTTERS

CATALOG NUMBER	ITEM DESCRIPTION	OUTSIDE DIMENSIONS HEIGHT x WIDTH	SHUTTER DIMENSIONS HEIGHT x WIDTH	SHIP WGHT. LBS	SHIP WGHT. KGS	LIST PRICE
SPM24W	PMC 24" Shutter - White PVC	30.25" x 30.25"	27.75" x 27.75"	0.0	0.0	
SPM24B	PMC 24" Shutter - Black PVC			3.1	1.4	

PM POLY CONES

PC24LW	24" Poly Cone Kit, with grill, White	0.0	0.0	
PC24LB	24" Poly Cone Kit, with grill, Black	0.0	0.0	
MH94203	Hardware Bag - 12"-24" PM Cones only, SS Hardware- (Already included in with Fans)	0.0	0.0	

Hardware not included with cone kits. Hardware needed for cone kits comes with the fan. If ordering a cone kit without a fan, order a hardware bag separately.

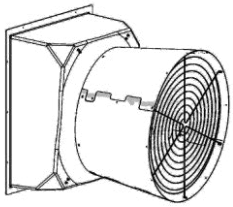

FIBERGLASS FAN SERIES

36" HYPERMAX DIRECT DRIVE FANS

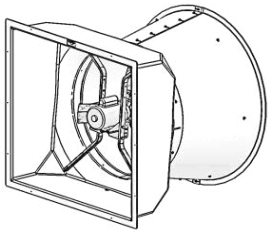

HOW TO ORDER

To order a complete 36" HYPERMAX fiberglass fan,
Select one each **FAN**, one each **SHUTTER** and one each **CONE** as needed.

HYPERMAX 36" FIBERGLASS FANS, INTERIOR MOUNT

CATALOG NUMBER	Housing	Blade	Motor Mount	Motor / Electric					BESS #	Performance Numbers tested with Aluminum Shutters							SHIP Weight	LIST PRICE EACH
				HP / RPM	Phase	Hertz	Volts	Amps		@ .00" SP	@ .05" SP	@ .10" SP	@ .15" SP	@ .20" SP	@ .25" SP	@ .30" SP		
										CFM	CFM	CFM	CFM	CFM	CFM	CFM		
										CFM/W	CFM/W	CFM/W	CFM/W	CFM/W	CFM/W	CFM/W	Lbs. / Kg	
HPM36W280MGA	White FG	Galvanized	Galvanized	0.5 / 850	Single Phase	60 Hz	208-230 Volts	3.39A @ 230v @ .30" SP	17085	11,660	10,840	10,150	9,290	8,140	6,510	4,930	/	
HPM36W280MGA-Q2																	/	
HPM36W280MGA-BW	White/Black									20.6	18.1	16.3	14.2	11.9	9.0	6.8	/	
HPM36W280MGA-BW-Q2																	/	
HPM36W280MCA	White FG	Aluminum	Stainless Steel	0.5 / 850		60 Hz	208-230	3.24A @ 230v @ .25" SP	18078	11,810	10,880	9,890	8,760	7,250	5,470	3,870	/	
HPM36W280MCA-Q2										19.4	17.2	15.2	13.3	10.8	8.2	5.8	/	
HPM36W280MSA	White FG	Stainless Steel	Stainless Steel	0.5 / 850	Single Phase	60 Hz	208-230	3.72A @ 230v @ .30" SP	17086	11,800	11,270	10,480	9,570	8,490	7,060	5,380	/	
HPM36W280MSA-Q2										18.9	17.6	15.5	13.6	11.5	9.1	6.7	/	
936350	White FG	Galvanized	Galvanized	1.0 / 850	Single Phase	60 Hz	208-230	3.49A @ 230v @ .30" SP	18081	12,190	11,500	10,730	9,960	8,880	7,580	6,300	162 / 73	
936350-Q2										20.7	18.6	16.5	14.8	12.6	10.2	8.1	177 / 80	
936360-SC	White FG	Stainless Steel	Stainless Steel	1.0 / 850	Single Phase	60 Hz	208-230	3.67A @ 230v @ .30" SP	18080	12,370	11,840	11,120	10,360	9,430	8,470	7,070	177 / 80	
936360-SC-Q2										19.2	17.8	16.0	14.3	12.5	10.7	8.6	191 / 87	
936370	White Fiberglass	Aluminum	Galv.	1.0 / 850	Single Phase	60 Hz	208-230 Volts	3.06A @ 230v @ .25" SP	18079	12,180	11,410	10,570	9,540	8,210	6,580	4,830	191 / 87	
936370-Q2																	206 / 93	
936370-SC			SS							19.5	17.7	16.0	14.1	12.0	9.6	7.0	206 / 93	
936370-SC-Q2																	13 / 6	

SC - Stainless Steel Motor Mount and Hardware
Q2 - Quantity of 2 fans shipped together assembled to save space and money (requires 2 shutters)
BW - Sable fan has a White exterior housing and a black interior housing.

PMC / HYPERMAX 36" SHUTTERS

CATALOG NUMBER	ITEM DESCRIPTION	OUTSIDE DIMENSIONS HEIGHT x WIDTH	SHUTTER DIMENSIONS HEIGHT X WIDTH	SHIP WGHT. LBS	SHIP WGHT. KGS	LIST PRICE
SPM36W	36" Shutter - White PV	45.5" x 45.5"	43" x 43"	0.0	0.0	
SPM36B	36" Shutter - Black PV	45.5" x 45.5"	43" x 43"	3.5	1.6	
SPM36A	36" Shutter - Aluminum	45.0" x 45.0"	42" x 42"	0.0	0.0	
936108	Wire Guard in front of Shutter for 36" Fan			141.0	64.0	

PMC / HYPERMAX 36" POLY CONES

936174	36" Panel Cone, 4 Sections with Grill - White	141.7	64.3	
PC36LW	36" Poly Cone with Grill - White	0.0	0.0	
PC36LB	36" Poly Cone with Grill - Black	0.0	0.0	
936192	Hardware Bag - 36"-50" Poly & FG Cones, ZP Hardware- (Already included in with Fans)	31.1	14.1	
MH94253	Hardware Bag - 36"-50" Cone Kits only, SS Hardware - (Already included in with Fans)	0.0	0.0	

Hardware not included with cone kits. Hardware needed for cone kits comes with the fan. If ordering a cone kit without a fan, order a hardware bag separately.

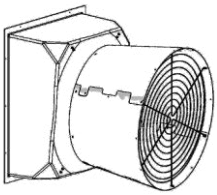

FIBERGLASS FAN SERIES

36" HYPERMAX BELT DRIVE FANS

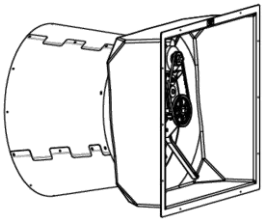

HOW TO ORDER

To order a complete 36" HYPERMAX fiberglass fan,
Select one each **FAN**, one each **SHUTTER** and one each **CONE** as needed.

HYPERMAX 36" FIBERGLASS FANS, INTERIOR MOUNT

CATALOG NUMBER	Housing	Blade	Motor Mount	Motor / Electric HP / RPM	Phase	Hertz	Volts	Amps	BESS #	Performance Numbers tested with Aluminum Shutters @ .00" SP CFM / CFM/W	@ .05" SP CFM / CFM/W	@ .10" SP CFM / CFM/W	@ .15" SP CFM / CFM/W	@ .20" SP CFM / CFM/W	@ .25" SP CFM / CFM/W	@ .30" SP CFM / CFM/W	SHIP Weight Lbs. / Kg	LIST PRICE EACH
936310	White	Stainless Steel	Stainless Steel	1.5 / 1725	Single Phase	60 Hz	230 Volt	5.93A @ 230v @ .30" SP	17095	16,760	16,080	15,200	14,320	13,320	12,190	10,620	53 / 24	
936310-Q2										14.7	13.7	12.6	11.4	10.3	9.2	7.9	53 / 24	
936315-SC	White	Stainless Steel	Stainless Steel	1.5 / 1725		60 Hz	208-230/460 Volt	4.28A @ 230v @ 30" SP	22123	16,500	15,700	14,930	14,090	13,170	12,030	9,980	59 / 27	
936315-SC-Q2										14.1	13.1	12.0	11.0	10.0	9.0	7.4	59 / 27	
HPM36W340LNAT	White	Aluminum	Galvanized	1.5 / 1725	Single Phase	60 Hz	230 Volt	4.68A @ 230v @ .30" SP	22156	14,520	13,890	13,290	12,680	12,070	11,480	10,790	/	
HPM36W340LNAT-Q2										15.3	14.2	13.3	12.4	11.6	10.9	10.1	/	
HPM36W340LGAT	White	Galvanized	Galvanized	1.5 / 1725	Single Phase	60 Hz	230 Volt	6.07A @ 230v @ .30" SP	17096	17,180	16,610	15,840	15,120	14,340	13,420	12,480	/	
HPM36W340LGAT-Q2										15.9	14.8	13.4	12.3	11.2	10.0	9.0	/	
936325	White	Galvanized	Galvanized	1.5 / 1725	Three Phase	60 Hz	208-230/460 Volt	4.39A @ 230v @ .30" SP	23212	16,830	16,290	15,610	14,890	14,100	13,250	12,300	88 / 40	
936325-Q2																		
936325-BW	Black									15.7	14.6	13.4	12.2	11.1	10.1	9.0	103 / 47	
936325-BW-Q2																		
HPM36W600LNAT	White	Aluminum	Galvanized	1.0 / 1725	Three Phase	60 Hz	230 / 460 Volts	3.14A @ 230v @ .30" SP	22154	14,320	13,690	13,130	12,460	11,870	11,210	10,510	/	
HPM36W600LNAT-Q2																	/	
HPM36W600LNAT-BW	Black																/	
HPM36W600LNAT-BW-Q2																	/	
HPM36W600LCAT	White		Stainless							16.0	14.7	13.8	12.8	11.9	11.0	10.2	/	
HPM36W600LCAT-Q2																	/	
HPM36W760MGAT	White	Galvanized	Galvanized	0.5 / 1725	Single Phase	60 Hz	230 Volt	3.68A @ 230v @ .29" SP	17093	12,680	11,670	10,480	8,650	5,200	3,380	1050*	/	
HPM36W760MGAT-Q2										23.6	20.2	17.0	13.1	7.4	4.3	1.3*	/	
HPM36W760MNAT	White	Aluminum	Galv.	0.5 / 1725	Single Phase	60 Hz	230 Volts	2.51A @ 230v @ .25" SP	17094	11,530	10,520	9,550	8,520	7,090	4,830	3,250	/	
HPM36W760MNAT-Q2																	/	
HPM36W760MCAT			SS														/	
HPM36W760MCAT-Q2																	/	
HPM36W760MNAT-BW	Black		Galvanized							21.5	19.0	16.7	14.5	12.0	8.3	5.7	/	
HPM36W760MNAT-BW-Q2																	/	

*** - tested @ .29" Static Pressure**
BW - Sable fan has a White exterior housing and a black interior housing.
Q2 - Quantity of 2 fans shipped together assembled to save space and money (requires 2 shutters)

PMC / HYPERMAX 36" SHUTTERS

CATALOG NUMBER	ITEM DESCRIPTION	OUTSIDE DIMENSIONS HEIGHT x WIDTH	SHUTTER DIMENSIONS HEIGHT X WIDTH	SHIP WGHT. LBS	SHIP WGHT. KGS	LIST PRICE
SPM36W	36" Shutter - White PV	45.5" x 45.5"	43" x 43"	0.0	0.0	
SPM36B	36" Shutter - Black PV	45.5" x 45.5"	43" x 43"	3.5	1.6	
SPM36A	36" Shutter - Aluminum	45.0" x 45.0"	42" x 42"	0.0	0.0	
936108	Wire Guard in front of Shutter for 36" Fan			141.0	64.0	

PMC / HYPERMAX 36" POLY CONES

936174	36" Panel Cone, 4 Sections with Grill - White	141.7	64.3	
PC36LW	36" Poly Cone with Grill - White	0.0	0.0	
PC36LB	36" Poly Cone with Grill - Black	0.0	0.0	
936192	Hardware Bag - 36"-50" Poly & FG Cones, ZP Hardware- (Already included in with Fans)	31.1	14.1	
MH94253	Hardware Bag - 36"-50" Cone Kits only, SS Hardware - (Already included in with Fans)	0.0	0.0	

Hardware not included with cone kits. Hardware needed for cone kits comes with the fan. If ordering a cone kit without a fan, order a hardware bag separately.

Toll-free: 1-800-99VALCO
Phone: (+1) 419-678-8731
Fax: (+1) 419-678-2200

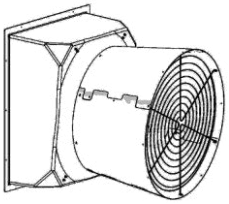

FIBERGLASS V-FAN SERIES

36" SLANT WALL DIRECT DRIVE V-FANS

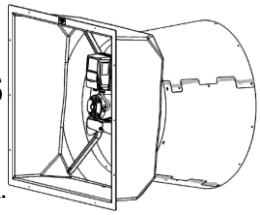

HOW TO ORDER

To order a complete 36" Hypermax fiberglass fan, select one **FAN**, one **CONE** & one **SHUTTER.**

ALUMINUM BLADE, INTERIOR MOUNT

CATALOG NUMBER	Housing	Blade	Mtr Mount	Motor	INPUT ELECTRIC Phase	Hertz	Volts	Amps	BESS #	BLADE SPEED RPM / Hz	Performance Numbers tested at 230v, 60Hz with Aluminum Shutters @ .00" SP CFM / CFM/W	@ .05" SP CFM / CFM/W	@ .10" SP CFM / CFM/W	@ .15" SP CFM / CFM/W	@ .20" SP CFM / CFM/W	@ .25" SP CFM / CFM/W	@ .30" SP CFM / CFM/W	SHIP Weight LBS. / KGS	LIST PRICE EACH
936230-1	White Fiberglass	Aluminum Blade	Galvanized	.75 HP Fan Motor	Single Phase	50 / 60 Hz	200-240 Volts	7.45 Amps @ .30" SP	20192	1140	15,250	14,610	14,050	13,370	12,730	12,040	11,300	44	
										95 Hz	17.1	15.8	14.8	13.7	12.7	11.8	10.9	20	
936230-1-Q2										1020	13,430	12,790	12,150	11,420	10,650	9,810	8,640	50	
										85 Hz	20.8	19.1	17.5	16.0	14.6	13.2	11.7	23	
936230-SC-1			SS							840	10,970	10,190	9,340	8,400	7,040	5,370	3,540	78	
										70 Hz	29.5	26.1	23.0	20.0	16.8	12.9	8.7	35	
936230-SC-1-Q2										660	8,460	7,390	5,950	3,750	1,840			78	
										55 Hz	45.2	36.2	27.9	17.6	8.7			35	
936230-BW-1	Black/White		Galvanized							540	6,600	5,160	2,350					56	
										45 Hz	56.9	41.2	18.7					25	
936230-BW-1-Q2																		56	
																		25	
936230-3	White Fiberglass	Aluminum Blade	Galv	.75 HP Fan Motor	Three Phase	50 / 60 Hz	200-240 Volts	3.89 Amps @ .30" SP	20193	1140	15,260	14,620	13,970	13,320	12,630	12,060	11,290	50	
										95 Hz	17.4	16.0	14.7	13.8	12.7	11.9	11.0	23	
936230-3-Q2										1020	13,440	12,790	12,070	11,400	10,680	9,840	8,640	50	
936230-SC-3			SS							85 Hz	21.1	19.2	17.6	16.1	14.7	13.3	11.8	93	
										840	10,980	10,230	9,370	8,340	6,950	5,410	3,580	42	
936230-SC-3-Q2										70 Hz	29.8	26.5	23.2	19.8	16.5	12.9	8.9	93	
936230-BW-3	Black/White		Galv							660	8,290	7,420	6,020	3,760	1,830			62	
										55 Hz	43.0	35.3	28.5	17.9	8.7			28	
936230-BW-3-Q2										540	6,510	5,290	2,370					62	
936230-BW-SC-3			SS							45 Hz	53.3	43.4	19.4					62	
																		28	
936230-BW-SC-3-Q2																		78	
936230-34	White Fiberglass	Aluminum Blade	Galv	.75 HP	Three Phase	50 / 60 Hz	460 Volts	1.37 Amps @ .30" SP	20198 - PVC Shutter	1140	14,930	14,380	13,740	13,200	12,530	11,660	10,830	56	
										95 Hz	17.1	16.0	14.7	13.8	12.7	11.6	10.6	25	
936230-34-Q2										1020	12,960	12,540	11,860	11,080	10,310	9,240	8,030	#N/A	
936230-SC-34			SS							85 Hz	20.4	19.1	17.6	15.7	14.3	12.6	11.0	94	
										840	10,570	9,800	8,890	7,670	6,250	4,560	3,500	43	
936230-SC-34-Q2										70 Hz	28.4	25.0	22.0	18.2	14.8	10.9	8.4	#N/A	
936230-BW-34	Black/White		Galv							660	7,910	6,710	5,160	3,400	1,940			#N/A	
										55 Hz	41.0	31.9	24.6	16.0	9.2			#N/A	
936230-BW-34-Q2										540	5,890	4,370	2,360					#N/A	
936230-BW-SC-34			SS							45 Hz	48.3	33.9	19.3					#N/A	
																		#N/A	
936230-BW-SC-34-Q2																		#N/A	

SC - Stainless Steel Motor Mount and Hardware
Q2 - Quantity of 2 fans shipped together assembled to save space and money (requires 2 shutters and 2 cones)
BW - Sable fan has a White exterior housing and a black interior housing.

PMC / HYPERMAX 36" SHUTTERS

CATALOG NUMBER	ITEM DESCRIPTION	OUTSIDE DIMENSIONS HEIGHT x WIDTH	SHUTTER DIMENSIONS HEIGHT X WIDTH	SHIP WEIGHT LBS.	SHIP WEIGHT KGS	LIST PRICE
SPM36W	36" Shutter - White PVC	45.5" x 45.5"	43" x 43"	0.0	0.0	
SPM36B	36" Shutter - Black PVC	45.5" x 45.5"	43" x 43"	3.5	1.6	
SPM36A	36" Shutter - Aluminum	45.0" x 45.0"	42" x 42"	0.0	0.0	
936108	Wire Guard in front of Shutter for 36" Fan			141.0	64.0	

PMC / HYPERMAX 36" CONES

936174	36" Panel Cone, 4 Sections with Grill - White	141.7	64.3	
PC36LW	36" Poly Cone with Grill - White	0.0	0.0	
PC36LB	36" Poly Cone with Grill - Black	0.0	0.0	
936192	Hardware Bag - 36"-50" Poly & FG Cones, ZP Hardware- (Already included in with Fans)	31.1	14.1	
MH94253	Hardware Bag - 36"-50" Cone Kits only, SS Hardware - (Already included in with Fans)	0.0	0.0	

Hardware not included with cone kits. Hardware needed for cone kits comes with the fan. If ordering a cone kit without a fan, order a hardware bag separately.

Toll-free: 1-800-99VALCO
Phone: (+1) 419-678-8731
Fax: (+1) 419-678-2200

WWW.VAL-CO.COM

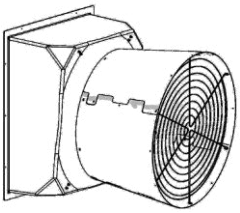

FIBERGLASS V-FAN SERIES

36" SLANT WALL DIRECT DRIVE V-FANS

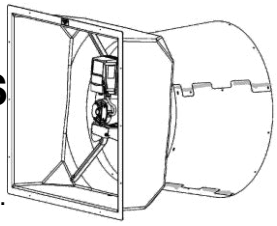

HOW TO ORDER

To order a complete 36" Hypermax fiberglass fan, select one **FAN**, one **CONE** & one **SHUTTER.**

GALVANIZED BLADE, INTERIOR MOUNT

CATALOG NUMBER	Housing	Blade	Mtr Mount	Motor	INPUT ELECTRIC Phase	Hertz	Volts	Amps	BESS #	BLADE SPEED RPM / Hz	Performance Numbers tested at 230v, 60Hz with Aluminum Shutters @ .00" SP CFM / CFM/W	@ .05" SP CFM / CFM/W	@ .10" SP CFM / CFM/W	@ .15" SP CFM / CFM/W	@ .20" SP CFM / CFM/W	@ .25" SP CFM / CFM/W	@ .30" SP CFM / CFM/W	SHIP Weight LBS. / KGS	LIST PRICE EACH
936235-1	White Fiberglass	Galvanized Blade	Galvanized Motor Mount	.75 HP Fan Motor	Single Phase	50 / 60 Hz	200-240 Volts	4.86 Amps @ .30" SP	20190	912	12,300	11,580	10,940	10,180	9,440	8,480	7,250	124.4	
										76 HZ	29.1	24.8	21.7	18.6	16.1	13.7	11.2		
										780	10,480	9,750	9,020	8,080	6,780	5,330	4,130	25.6	
										65 Hz	36.7	30.4	25.6	20.8	16.3	11.7	7.9		
936235-1-Q2										660	8,900	8,020	6,960	5,310	3,710	2,510	990	140.0	
										55 Hz	47.3	37.1	28.1	19.3	11.6	6.8	2.5		
										540	7,200	5,940	4,020	2,190				28.8	
										45 Hz	61.5	41.3	23.7	10.3					
936235-3	White Fiberglass	Galvanized Blade	Galvanized Motor Mount	.75 HP Fan Motor		50 / 60 Hz	200-240 Volts	2.51 Amps @ .30" SP	20195	912	12,250	11,660	10,980	10,260	9,490	8,650	7,400	140.0	
										76 HZ	29.0	25.5	22.2	19.2	16.3	14.0	11.5		
										780	10,550	9,820	9,030	8,070	6,990	5,400	4,250	28.8	
										65 Hz	37.4	31.0	25.6	20.8	17.1	12.0	8.3		
936235-3-Q2										660	8,950	8,050	7,080	5,350	3,760	2,570	950	155.6	
										55 Hz	46.4	37.6	28.6	19.6	11.9	7.0	2.3		
										540	7,110	6,030	4,180	2,130				32.0	
										45 Hz	57.8	43.0	25.2	10.1					

STAINLESS STEEL BLADE, INTERIOR MOUNT

936600-SC-1	White Fiberglass	Stainless Steel Blade	Stainless Steel Motor Mount	.75 HP Fan Motor	Single Phase	50 / 60 Hz	200-240 Volts	5.23 Amps @ .30" SP	20191	912	12,270	11,680	11,030	10,370	9,600	8,900	7,930	51.6	
										76 HZ	28.4	24.5	21.2	18.1	15.7	13.5	11.3		
										780	10,450	9,810	9,040	8,130	7,230	5,720	3,950	10.6	
										65 Hz	35.9	29.9	24.9	20.1	16.4	12.0	7.6		
936600-SC-1-Q2										660	8,810	8,010	6,970	5,740	3,750	2,470	1,520	58.0	
										55 Hz	46.4	36.1	27.1	20.1	11.7	6.8	3.8		
										540	7,150	5,970	4,080	2,120				11.9	
										45 Hz	61.1	41.7	23.5	10.3					
936600-SC-3	White Fiberglass	Stainless Steel Blade	Stainless Steel Motor Mount	.75 HP Fan Motor	Three Phase	50 / 60 Hz	200-240 Volts	2.68 Amps @ .30" SP	20194	912	12,190	11,730	11,090	10,380	9,650	8,930	8,030	58.0	
										76 HZ	27.8	24.7	21.5	18.4	15.9	13.7	11.5		
										780	10,520	9,810	8,960	8,090	7,210	5,840	4,060	11.9	
										65 Hz	37.3	30.7	24.6	20.1	16.4	12.3	8.0		
936600-SC-3-Q2										660	8,820	7,990	6,980	5,730	3,850	2,520	1,520	58.0	
										55 Hz	46.7	37.0	28.3	20.3	13.6	7.9	3.9		
										540	7,130	5,960	4,210	2,220				11.9	
										45 Hz	58.0	42.6	23.9	10.5					

SC - Stainless Steel Motor Mount and Hardware

Q2 - Quantity of 2 fans shipped together assembled to save space and money (requires 2 shutters & 2 cones)

PMC / HYPERMAX 36" SHUTTERS

CATALOG NUMBER	ITEM DESCRIPTION	OUTSIDE DIMENSIONS HEIGHT x WIDTH	SHUTTER DIMENSIONS HEIGHT X WIDTH	SHIP WEIGHT LBS.	SHIP WEIGHT KGS	LIST PRICE
SPM36W	36" Shutter - White PVC	45.5" x 45.5"	43" x 43"	0.0	0.0	
SPM36B	36" Shutter - Black PVC	45.5" x 45.5"	43" x 43"	3.5	1.6	
SPM36A	36" Shutter - Aluminum	45.0" x 45.0"	42" x 42"	0.0	0.0	
936108	Wire Guard in front of Shutter for 36" Fan			141.0	64.0	

PMC / HYPERMAX 36" POLY CONES

936174	36" Panel Cone, 4 Sections with Grill - White	141.7	64.3	
PC36LW	36" Poly Cone with Grill - White	0.0	0.0	
PC36LB	36" Poly Cone with Grill - Black	0.0	0.0	
936192	Hardware Bag - 36"-50" Poly & FG Cones, ZP Hardware- (Already included in with Fans)	31.1	14.1	
MH94253	Hardware Bag - 36"-50" Cone Kits only, SS Hardware - (Already included in with Fans)	0.0	0.0	

Hardware not included with cone kits. Hardware needed for cone kits comes with the fan. If ordering a cone kit without a fan, order a hardware bag separately.

Toll-free: 1-800-99VALCO
Phone: (+1) 419-678-8731
Fax: (+1) 419-678-2200

FIBERGLASS FAN SERIES

50" HYPERMAX BELT DRIVE FANS

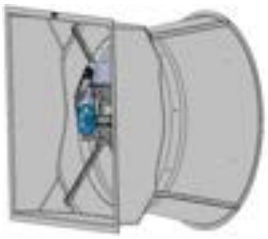

HOW TO ORDER

To order a complete 50" Hypermax fiberglass fan,
Select one each **FAN**, one each **SHUTTER** and one each **CONE** as needed.

HYPERMAX 50" FIBERGLASS FANS, INTERIOR MOUNT

Single Phase

CATALOG NUMBER	Housing	Blade	Motor Mount	Motor / Electric HP / RPM	Phase	Hertz	Volts	Amps	BESS #	Performance Numbers tested with Aluminum Shutters @ .00" SP CFM / CFM/W	@ .05" SP CFM / CFM/W	@ .10" SP CFM / CFM/W	@ .15" SP CFM / CFM/W	@ .20" SP CFM / CFM/W	@ .25" SP CFM / CFM/W	@ .30" SP CFM / CFM/W	SHIP Weight Lbs. / Kg	LIST PRICE EACH
HPM50W340MCAT-BW	W/B	Aluminum	SS	1.5 / 1725	Single Phase	60 Hz	230 Volt	5.05A @ 230v @ .30" SP	22126	22,900	21,600	20,100	18,600	16,700	11,000	8,400	/	
HPM50W340MCAT	White FG																/	
HPM50W340MNAT			Galv.							22.7	20.8	18.8	17.0	15.0	10.2	7.3	/	
HPM50W420LCAT	White FG	Aluminum	SS	1.5 / 1725	Single Phase	60 Hz	230 Volt	5.71A @ 230v @ .25" SP	22125	24,500	23,100	21,700	20,300	18,400	16,300	11,000	1 /	
HPM50W420LNAT			Galv.							21.1	18.9	17.6	15.7	14.1	12.5	8.5	/	
HPM50W420LNAT-BW	W/B																/	
950140-SSHW	White FG	Aluminum	SS	1.5 / 1725	Single Phase	60 Hz	230 Volt	6.38A @ 230v @ .25" SP	22385	25,500	24,200	22,900	21,500	19,900	18,100	13,900	99 / 45	
950140			Galv.							19.6	18.0	16.6	15.3	13.9	12.5	9.8	83 / 38	
950140-BW	W/B																83 / 38	
HPM50W340MSAT	White FG	Stainless Steel	Stainless Steel	1.5 / 1725	Single Phase	60 Hz	230 Volt	5.70A @ 230v @ .30" SP	22124	24,500	23,100	21,600	20,100	18,500	16,500	10,500	/	
										23.2	20.9	18.7	16.5	14.7	13.0	8.0		

Three Phase

CATALOG NUMBER	Housing	Blade	Motor Mount	HP / RPM	Phase	Hertz	Volts	Amps	BESS #	@ .00" SP CFM / CFM/W	@ .05" SP CFM / CFM/W	@ .10" SP CFM / CFM/W	@ .15" SP CFM / CFM/W	@ .20" SP CFM / CFM/W	@ .25" SP CFM / CFM/W	@ .30" SP CFM / CFM/W	SHIP Weight Lbs. / Kg	LIST PRICE EACH
HPM50W600MCAT	White FG	Aluminum	SS	1.0 / 1725	Three Phase	60 Hz	208-230/460 Volt	3.29A @ 230v @ .30" SP	22133	22,700	21,200	19,600	18,000	16,000	10,500	7,500	/	
HPM50W600MNAT			Galv.							24.3	21.9	19.4	17.5	15.4	10.4	6.9	/	
HPM50W600MNAT-BW	W/B																/	
950225	White FG	Aluminum	Galv.	1.5 / 1725	Three Phase	60 Hz	208-230/460 Volt	4.87A @ 230v @ .30" SP	22131	26,300	25,000	23,700	22,300	21,000	19,400	17,300	22 / 10	
950225-SSHW			SS							18.3	16.9	15.6	14.4	13.3	12.1	10.8	29 / 13	
950255	White FG	Aluminum	Galvanized	2.0 / 1725	Three Phase	60 Hz	208-230/460 Volt	5.94A @ 230v @ .30" SP	22135	28,800	27,600	26,400	25,200	24,000	22,500	20,900	44 / 20	
950255-BW	W/B									15.4	14.3	13.4	12.5	11.7	10.8	10.0	44 / 20	
950235	White FG	Aluminum	Galv.	1.5 / 1725	Three Phase	**50 Hz**	190/380 Volt	2.54A @ 380v @ .25" SP	22132	25,100	23,700	22,300	21,000	19,300	17,300	12,200	36 / 16	
950235-SSHW			SS							19.7	17.8	16.4	15.1	13.6	12.1	8.9	44 / 20	

BW - Sable fan has a White exterior housing and a black interior housing (Housing W/B).
SSHW - Stainless Steel Motor Mount & Hardware

HYPERMAX 50" SHUTTERS

CATALOG NUMBER	ITEM DESCRIPTION	OUTSIDE DIMENSIONS HEIGHT x WIDTH	SHUTTER DIMENSIONS HEIGHT X WIDTH	SHIP WGHT. LBS	SHIP WGHT. KGS	LIST PRICE
SPM50W	PMC 50" Shutter - White PVC	59.18" x 57"	56.4" x 54.13"	0.0	0.0	
SPM50B	PMC 50" Shutter - Black PVC	59.18" x 57"	56.4" x 54.13"	0.0	0.0	
SPM50A	PMC 50" Shutter - Aluminum	59" x 57"	56" x 54"	0.0	0.0	
950108	Wire Guard in front of Shutter for 50" Fan			19.9	9.0	

HYPERMAX 50" POLY CONES

950188	50" Panel Cone Kit with Grill, 15" Long, White	21.8	9.9	
PC50SW	50" Poly Cone Kit with Grill, 15" Long, White	0.0	0.0	
PC50SB	50" Poly Cone Kit with Grill, 15" Long, Black	0.0	0.0	
936192	Hardware Bag - 36"-50" Poly & FG Cones, ZP Hardware- (Already included in with Fans)	31.1	14.1	
MH94253	Hardware Bag - 36"-50" Cone Kits only, SS Hardware - (Already included in with Fans)	0.0	0.0	

Hardware not included with cone kits. Hardware needed for cone kits comes with the fan. If ordering a cone kit without a fan, order a hardware bag separately.

Toll-free: 1-800-99VALCO
Phone: (+1) 419-678-8731
Fax: (+1) 419-678-2200

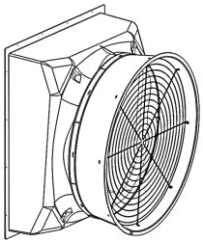

FIBERGLASS V-FAN SERIES

50" SLANT WALL DIRECT DRIVE V-FANS

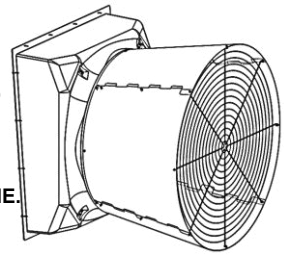

HOW TO ORDER

To order a complete 50" fiberglass V-Fan, select one(1) **FAN**, one(1) **SHUTTER,** and one(1) **CONE.**

ALUMINUM BLADE, INTERIOR MOUNT

CATALOG NUMBER	Housing	Cone Color	Blade	Mtr Mount	Motor	INPUT ELECTRIC Phase	Hertz	Volts	Amps	BESS #	BLADE SPEED RPM / Hz	Performance Numbers tested at 230v, 60Hz with Aluminum Shutters @ .00" SP CFM / CFM/W	@ .05" SP CFM / CFM/W	@ .10" SP CFM / CFM/W	@ .15" SP CFM / CFM/W	@ .20" SP CFM / CFM/W	@ .25" SP CFM / CFM/W	@ .30" SP CFM / CFM/W	SHIP Weight LBS. / KGS	LIST PRICE EACH
950230-1	White Fiberglass	White	Aluminum	Galvanized Mount	2.0 HP Fan Motor	Single Phase	50 / 60 Hz	200-240 Volts	5.9 Amps @ .30" SP	22136	692	30,000	29,000	27,800	26,800	25,600	24,300	23,000	29.0	
											57.5 Hz	15.7	14.7	13.7	12.9	12.1	11.3	10.6		
											604	26,300	24,900	23,600	22,400	21,000	19,400	16,900		
											50 Hz	20.9	18.9	17.4	16.1	14.7	13.4	11.7		
											483	20,600	19,100	17,600	15,600	11,700	6,500	2,900		
											40 Hz	31.6	27.8	24.3	20.8	16.0	8.1	3.2	13.2	
											362	15,100	12,800	8,900	2,500					
											30 Hz	52.8	40.4	27.5	6.4					
											302	11,700	8,800	2,000						
											25 Hz	65.7	44.1	8.5						
950230-3	White Fiberglass	White	Aluminum	Galvanized Mount	2.0 HP Fan Motor	Three Phase	50 / 60 Hz	200-240 Volts	5.7 Amps @ .30" SP	22137	460	30,200	29,200	28,000	26,800	25,600	24,300	23,100	36.3	
											57.5 Hz	16.1	15.1	14.0	13.2	12.4	11.5	10.7		
											602	26,300	24,900	23,600	22,300	20,800	19,300	16,600		
											50 Hz	21.1	19.2	17.7	16.2	14.8	13.5	11.6		
											482	20,800	19,200	17,600	15,700	10,700	6,500	2,700		
											40 Hz	32.4	28.1	24.6	21.0	14.9	8.2	3.1	16.5	
											361	15,200	12,900	8,500	2,000					
											30 Hz	54.0	41.2	26.2	5.1					
											301	11,600	8,600	1,800						
											25 Hz	67.1	45.3	7.9						
950230-34	White Fiberglass	White	Aluminum	Galvanized Mount	2.0 HP Fan Motor	Three Phase	50 / 60 Hz	420-480 Volts	3.0 Amps @ .30" SP	22138	460	30,100	29,000	27,900	26,700	25,600	24,400	23,100	36.3	
											57.5 Hz	16.3	15.3	14.2	13.4	12.5	11.7	11.0		
											602	26,200	24,900	23,600	22,300	20,900	19,200	16,400		
											50 Hz	21.5	19.7	17.9	16.6	15.2	13.8	11.9		
											482	20,700	19,200	17,500	15,400	10,000	6,500	2,800		
											40 Hz	31.3	27.6	23.8	20.4	13.6	7.9	3.1	16.5	
											361	15,300	12,900	8,000	2,000					
											30 Hz	51.6	38.8	23.5	5.0					
											301	11,900	8,600							
											25 Hz	62.3	41.5							

HYPERMAX 50" SHUTTERS

CATALOG NUMBER	ITEM DESCRIPTION	OUTSIDE DIMENSIONS HEIGHT x WIDTH	SHUTTER DIMENSIONS HEIGHT X WIDTH	SHIP WGHT. LBS	SHIP WGHT. KGS	LIST PRICE
SPM50W	PMC 50" Shutter - White PVC	59.18" x 57"	56.4" x 54.13"	0.0	0.0	
SPM50B	PMC 50" Shutter - Black PVC	59.18" x 57"	56.4" x 54.13"	0.0	0.0	
SPM50A	PMC 50" Shutter - Aluminum	59" x 57"	56" x 54"	0.0	0.0	
950108	Wire Guard in front of Shutter for 50" Fan			19.9	9.0	

HYPERMAX 50" POLY CONES

950188	50" Panel Cone Kit with Grill, 15" Long, White	21.8	9.9	
PC50SW	50" Poly Cone Kit with Grill, 15" Long, White	0.0	0.0	
PC50SB	50" Poly Cone Kit with Grill, 15" Long, Black	0.0	0.0	
936192	Hardware Bag - 36"-50" Poly & FG Cones, ZP Hardware- (Already included in with Fans)	31.1	14.1	
MH94253	Hardware Bag - 36"-50" Cone Kits only, SS Hardware - (Already included in with Fans)	0.0	0.0	

Hardware not included with cone kits. Hardware needed for cone kits comes with the fan. If ordering a cone kit without a fan, order a hardware bag separately.

FIBERGLASS FAN SERIES

54" HYPERMAX BELT DRIVE FANS

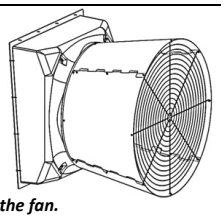

HOW TO ORDER

To order a complete 54" Hypermax fiberglass fan, select one each **FAN**, and one each **SHUTTER.**

Protection from snow or ice loads must be provided. An overhanging roof or snow guards on the roof must be provided to fully cover the fan.

VAL-CO® warranty does not apply for equipment against snow or ice damage.

If a fan is installed in a region that receives significant snowfall, Valco recommends a short cone fan (page 28-20).

HYPERMAX 54" FIBERGLASS FANS WITH LONG CONE, INTERIOR MOUNT - Single Phase

CATALOG NUMBER	Housing	Cone Color	Blade	Motor Mount	Motor / Electric					BESS #	Performance Numbers tested with Aluminum Shutters							SHIP Weight	LIST PRICE EACH
					HP / RPM	Phase	Hertz	Volts	Amps		@ .00" SP	@ .05" SP	@ .10" SP	@ .15" SP	@ .20" SP	@ .25" SP	@ .30" SP		
											CFM	CFM	CFM	CFM	CFM	CFM	CFM	Lbs. / Kg	
											CFM/W	CFM/W	CFM/W	CFM/W	CFM/W	CFM/W	CFM/W		
954200	White FG	White	Cast Aluminum	Galv.	1.5 / 1725	Single Phase	60 Hz	230 Volts	6.10A @ 230v @ .30" SP	15647	30,500	28,900	27,000	24,600	21,900	18,300	9,300	/	
954200-SC				SS														/	
954200-BW	White/Black			Galvanized							27.2	24.6	21.9	19.2	16.6	13.5	6.7	39 / 18	
954210	White FG	White	Cast Aluminum	Galv.	1.5 / 1725	Single Phase	60 Hz	230 Volts	7.03A @ 230v @ .30" SP	15648	32,100	30,700	28,800	26,700	24,300	21,300	16,800	/	
954210-SC				SS														/	
954210-BW	White/Black			Galvanized							24.9	22.6	20.4	18.1	15.9	13.6	10.5	130 / 59	
954205	White FG	White	Galvanized	Galvanized	1.5 / 1725	Single	60 Hz	230 Volts	6.04A @ 230v @ .30" SP	15646	29,800	28,500	27,100	25,000	22,500	19,500	15,200	94 / 42	
											26.6	24.3	22.3	19.8	17.2	14.5	11.0		
954215	White FG	White	Galvanized	Galvanized	1.5 / 1725	Single	60 Hz	230 Volts	7.23A @ 230v @ .30" SP	15649	32,000	30,600	29,100	27,400	25,200	22,700	19,700	/	
											23.2	21.4	19.6	17.8	15.9	14.0	12.0		

BW - Sable fan has a White exterior housing and a black interior housing.
SC - Stainless Steel Motor Mount and Hardware

54" SHUTTERS

CATALOG NUMBER	ITEM DESCRIPTION	OUTSIDE DIMENSIONS HEIGHT x WIDTH	SHUTTER DIMENSIONS HEIGHT X WIDTH	SHIP WEIGHT		LIST PRICE
				LBS	KGS	
SPM54W	54" Shutter - White PVC	61.5" x 61.5"	59" x 59"	0.0	0.0	
SPM54B	54" Shutter - Black PVC	61.5" x 61.5"	59" x 59"	0.0	0.0	
SPM54A	54" Shutter - Aluminum	61.35" x 61.35"	58.25" x 58.25"	0.0	0.0	
954108	Wire Guard in front of Shutter for 54" Fan			0.0	0.0	

54" FIBERGLASS FAN OPTIONS

954226	Kit, 54" Cone Reinforcement for Snow Load	49.7	22.5	

FIBERGLASS FAN SERIES

54" HYPERMAX BELT DRIVE FANS

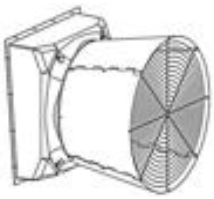

HOW TO ORDER

To order a complete 54" Hypermax fiberglass fan, select one each **FAN**, and one each **SHUTTER.**

Protection from snow or ice loads must be provided. An overhanging roof or snow guards on the roof must be provided to fully cover the fan.

VAL-CO® warranty does not apply for equipment against snow or ice damage.

If a fan is installed in a region that receives significant snowfall, Valco recommends a short cone fan (page 28-20).

HYPERMAX 54" FIBERGLASS FANS WITH LONG CONE, INTERIOR MOUNT - 3 Phase

CATALOG NUMBER	Housing	Cone Color	Blade	Motor Mount	Motor / Electric					BESS #	Performance Numbers tested with Aluminum Shutters							SHIP Weight	LIST PRICE EACH
					HP / RPM	Phase	Hertz	Volts	Amps		@ .00" SP	@ .05" SP	@ .10" SP	@ .15" SP	@ .20" SP	@ .25" SP	@ .30" SP		
											CFM / CFM/W	CFM / CFM/W	CFM / CFM/W	CFM / CFM/W	CFM / CFM/W	CFM / CFM/W	CFM / CFM/W	Lbs. / Kg	
954245	White FG	White	Cast Aluminum	Galv.	1.5 / 1725	Three	60 Hz	208-230 / 460 Volts	4.93A @ 230v @ .30" SP	15655	32,500	31,100	29,400	27,400	24,900	22,100	18,800	26 / 12	
954245-SC				SS														48 / 22	
954245-BW	White/Black			Galvanized							24.6	22.5	20.4	18.3	16.1	13.9	11.6	/	
954240	White	White	Galvanized	Galvanized	1.5 / 1725	Three	60 Hz	208-230/460	4.89A @ 230v @ .30" SP	15654	32,000	30,700	29,200	27,400	25,200	22,700	19,700	/	
											24.4	22.5	20.5	18.6	16.5	14.5	12.3		
954280	White	White	Cast Aluminum	Galv.	2.0 / 1725	Three	60 Hz	208-230 / 460 Volts	6.26A @ 230v @ .30" SP	22389	36,500	35,000	33,200	31,400	29,500	27,400	24,700	/	
954280-SC				SS														/	
954280-BW	White/Black			Galvanized							19.6	18.1	16.5	15.1	13.8	12.6	11.1	72 / 33	
954285	White	White	Galvanized	Galvanized	2.0 / 1725	Three	60 Hz	208-230/460	5.61A @ 230v @ .30" SP	22387	34,100	32,700	31,300	29,500	27,900	25,700	23,300	48 / 22	
											21.0	19.4	17.9	16.4	15.0	13.4	11.9		
954255	White FG	White	Aluminum	Galv.	1.5 / 1425	Three	50 Hz	190 / 380	2.50A @ 380v @ .25" SP	17073	31,300	29,700	27,500	25,300	22,800	19,300	14,500	/	
954255-SC				Stainless							26.6	24.0	21.4	18.8	16.3	13.6	10.3	79 / 36	
954295	White	White	Galvanized	Galvanized	1.5 / 1425	Three	50 Hz	190 / 380	3.03A @ 380v @ .30" SP	17074	32,600	31,100	29,700	27,700	25,800	23,200	20,400	29 / 13	
											21.4	19.7	18.1	16.4	14.9	13.1	11.4		

BW - Sable fan has a White exterior housing and a black interior housing.
SC - Stainless Steel Motor Mount and Hardware

54" SHUTTERS & CONE REINFORCEMENT

CATALOG NUMBER	ITEM DESCRIPTION	OUTSIDE DIMENSIONS HEIGHT x WIDTH	SHUTTER DIMENSIONS HEIGHT X WIDTH	SHIP WEIGHT		LIST PRICE
				LBS	KGS	
SPM54W	54" Shutter - White PVC	61.5" x 61.5"	59" x 59"	0.0	0.0	
SPM54B	54" Shutter - Black PVC	61.5" x 61.5"	59" x 59"	0.0	0.0	
SPM54A	54" Shutter - Aluminum	61.35" x 61.35"	58.25" x 58.25"	0.0	0.0	
954108	Wire Guard in front of Shutter for 54" Fan			0.0	0.0	
954226	Kit, 54" Cone Reinforcement for Snow Load			49.7	22.5	

Toll-free: 1-800-99VALCO
Phone: (+1) 419-678-8731
Fax: (+1) 419-678-2200

WWW.VAL-CO.COM

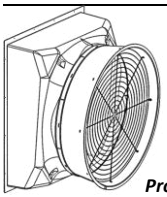

FIBERGLASS FAN SERIES

54" HYPERMAX BELT DRIVE FANS

HOW TO ORDER

To order a complete 54" Hypermax fiberglass fan, select one each **FAN**, and one each **SHUTTER.**

Protection from snow/ice loads must be provided. Overhanging roof or snow guards on the roof must be provided to fully cover the fan.

VAL-CO® warranty does not apply for equipment against snow or ice damage.

If a fan is installed in a region that receives significant snowfall, Valco recommends a short cone fan (page 28-20).

HYPERMAX 54" FIBERGLASS FANS WITH SHORT CONE, INTERIOR MOUNT

CATALOG NUMBER	FG Housing	Cone Color	Blade	Motor Mount	Motor / Electric HP / RPM	Phase	Hertz	Volts	Amps	BESS #	Performance Numbers tested with Aluminum Shutters @ .00" SP CFM / CFM/W	@ .05" SP CFM / CFM/W	@ .10" SP CFM / CFM/W	@ .15" SP CFM / CFM/W	@ .20" SP CFM / CFM/W	@ .25" SP CFM / CFM/W	@ .30" SP CFM / CFM/W	SHIP Weight Lbs. / Kg	LIST PRICE EACH
954800	White FG	White	Aluminum Blade	Galv.	1.5 / 1725	Single Phase	60 Hz	230 Volts	6.28 Amps @ 230v @ .30" SP	19465	29,200	27,500	25,600	23,500	21,100	17,500	10,200	1 / 1	
954800-SC				SS														1 / 1	
954800-BW	White/Black	Black		Galv.							23.9	21.9	19.6	17.7	15.5	12.6	7.5	1 / 1	
954810	White FG	White	Aluminum Blade	Galv.	1.5 / 1725	Single Phase	60 Hz	230 Volts	6.22 Amps @ 230v @ .30" SP	19464	29,600	28,000	26,000	24,100	21,900	18,500	14,400	1 / 1	
954810-SC				SS														1 / 1	
954810-BW	White/Black	Black		Galv.							24.0	21.9	19.6	17.8	15.8	13.2	10.2	1 / 1	
954815	White FG	White	Galvanized	Galvanized	1.5 / 1725	Single	60 Hz	230	6.45 Amps @ 230v @ .30" SP	19467	29,500	28,100	26,500	24,600	22,800	20,300	16,900	1 / 1	
											22.3	20.8	19.1	17.5	15.8	14.0	11.5		
954845	White FG	White	Aluminum	Galv.	1.5 / 1725	Three Phase	60 Hz	208-230/460	4.92 Amps @ 230v @ .30" SP	19472	30,800	29,200	27,400	25,600	23,600	21,400	17,700	15 / 7	
954845-SC				SS							22.0	20.1	18.4	16.7	15.0	13.4	11.0	5 / 2	
954880	White	White	Aluminum	Galvanized	2.0 / 1725	Three Phase	60 Hz	208-230 / 460	6.28 Amps @ 230v @ .30" SP	22391	34,000	32,400	30,900	29,300	27,500	25,800	23,600	5 / 2	
954880-BW	White/Black	Black									17.2	16.0	14.8	13.7	12.6	11.7	10.5	1 /	
954880-SC	White	White		SS														1 /	
954840	White FG	White	Galvanized	Galvanized	1.5 / 1725	Three	60 Hz	208-230/460	4.56 Amps @ 230v @ .30" SP	19473	29,100	27,600	26,000	24,300	22,500	20,100	17,100	15 / 7	
											24.0	21.6	19.7	17.8	16.1	14.1	11.6		

BW - Sable fan has a White exterior housing and a black interior housing.
SC - Stainless Steel Motor Mount and Hardware

54" SHUTTERS

CATALOG NUMBER	ITEM DESCRIPTION	OUTSIDE DIMENSIONS HEIGHT x WIDTH	SHUTTER DIMENSIONS HEIGHT X WIDTH	SHIP WGHT. LBS	SHIP WGHT. KGS	LIST PRICE
SPM54W	54" Shutter - White PVC	61.5" x 61.5"	59" x 59"	0.0	0.0	
SPM54B	54" Shutter - Black PVC	61.5" x 61.5"	59" x 59"	0.0	0.0	
SPM54A	54" Shutter - Aluminum	61.35" x 61.35"	58.25" x 58.25"	0.0	0.0	
954108	Wire Guard in front of Shutter for 54" Fan			0.0	0.0	

Toll-free: 1-800-99VALCO
Phone: (+1) 419-678-8731
Fax: (+1) 419-678-2200

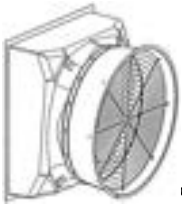

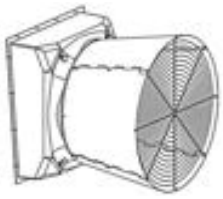

FIBERGLASS V-FAN SERIES

54" SLANT WALL DIRECT DRIVE V-FANS

HOW TO ORDER

To order a complete 54" fiberglass fan, select one each **FAN**, and one each **SHUTTER.**

tection from snow or ice loads must be provided. An overhanging roof or snow guards on the roof must be provided to fully cover t

VAL-CO® warranty does not apply for equipment against snow or ice damage.

If a fan is installed in a region that receives significant snowfall, Valco recommends a short cone fan (page 28-20).

ALUMINUM BLADE with SHORT CONE, INTERIOR MOUNT

CATALOG NUMBER	Housing	Cone Color	Blade	Mtr Mount	Motor	INPUT ELECTRIC Phase	Hertz	Volts	Amps	BESS #	BLADE SPEED RPM / Hz	Performance Numbers tested at 230v, 60Hz with Aluminum Shutters @ .00" SP CFM / CFM/W	@ .05" SP CFM / CFM/W	@ .10" SP CFM / CFM/W	@ .15" SP CFM / CFM/W	@ .20" SP CFM / CFM/W	@ .25" SP CFM / CFM/W	@ .30" SP CFM / CFM/W	SHIP Weight LBS. / KGS	LIST PRICE EACH
954830-1	White Fiberglass	White	Aluminum Blade	Galv.	2.0 HP Fan Motor	Single Phase	50 / 60 Hz	200-240 Volts	15.3 Amps @ .30" SP	19474	620	35,000	33,600	32,200	30,600	29,100	27,300	25,300	1.3	
											51.6 Hz	18.4	17.1	15.9	14.7	13.6	12.4	11.3		
											603	34,000	32,400	31,000	29,400	27,800	26,000	23,800		
954830-SC-1				Stainless							50 Hz	19.8	18.2	16.8	15.6	14.3	13.1	11.8		
											482	27,100	25,300	23,300	21,000	17,900	10,300	6,000		
											40 Hz	30.5	27.2	24.5	20.8	17.5	10.2	5.4		
954830-BW-1	Black Int.*	Black		Galv.							362	20,000	17,200	13,900	5,600				0.6	
											30Hz	53.0	43.2	32.9	11.9					
											301	15,700	12,600							
											25 Hz	65.9	49.6							
954830-3	White Fiberglass	White	Aluminum Blade	Galv.	2.0 HP Fan Motor	Three Phase	50 / 60 Hz	200-240 Volts	7.8 Amps @ .30" SP	19477	620	34,400	33,100	31,600	30,200	28,600	26,800	24,900	1.3	
											51.6 Hz	18.9	17.5	16.2	15.1	13.9	12.7	11.6		
											600	33,400	32,000	30,400	29,000	27,300	25,300	23,400		
954830-SC-3				Stainless							50 Hz	20.1	18.5	17.0	15.9	14.6	13.2	12.0		
											480	26,700	24,900	23,000	20,600	18,000	12,700			
954830-BW-SC-3	Black Int.*	Black									40 Hz	31.5	27.8	25.1	21.1	18.1	12.6		0.6	
											360	19,400	16,900	13,200	4,800					
954830-BW-3				Galv.							30Hz	58.6	50.6	32.0	10.3					
											300	15,300	12,300							
											25 Hz	66.9	50.3							

ALUMINUM BLADE with LONG CONE, INTERIOR MOUNT

CATALOG NUMBER	Housing	Cone Color	Blade	Mtr Mount	Motor	INPUT ELECTRIC Phase	Hertz	Volts	Amps	BESS #	BLADE SPEED RPM / Hz	@ .00" SP CFM / CFM/W	@ .05" SP CFM / CFM/W	@ .10" SP CFM / CFM/W	@ .15" SP CFM / CFM/W	@ .20" SP CFM / CFM/W	@ .25" SP CFM / CFM/W	@ .30" SP CFM / CFM/W	SHIP Weight LBS. / KGS	LIST PRICE EACH
954230-1	White Fiberglass	White	Aluminum Blade	Galv.	2.0 HP Fan Motor	Single Phase	50 / 60 Hz	200-240 Volts	14.9 Amps @ .30" SP	19475	625	37,700	36,200	34,600	33,000	31,100	29,100	26,800	68.5	
											52.1 Hz	21.4	19.3	17.7	16.2	14.8	13.3	11.9		
											602	36,200	34,700	33,100	31,300	29,300	27,100	24,700		
954230-SC-1				Stainless							50 Hz	23.0	20.8	19.1	17.3	15.7	14.0	12.5		
											482	29,000	27,000	24,700	22,200	19,200	9,600			
											40 Hz	35.3	30.6	26.2	22.9	18.9	9.3			
954230-BW-1	Black Int.*			Galv.							361	21,100	18,300	14,400	5,100				31.1	
											30Hz	61.6	46.4	33.9	10.5					
											302	16,900	13,400							
											25 Hz	76.0	53.8							
954230-3	White Fiberglass	White	Aluminum Blade	Galv.	2.0 HP Fan Motor	Three Phase	50 / 60 Hz	200-240 Volts	7.8 Amps @ .30" SP	19476	625	37,300	35,800	34,400	32,700	30,800	28,800	26,600	0.0	
											52.1 Hz	21.9	20.0	18.3	16.7	15.0	13.7	12.4		
											599	35,800	34,400	32,900	31,100	29,000	26,900	24,500		
954230-SC-3				Stainless							50 Hz	23.6	21.7	19.4	18.0	15.8	14.3	12.9		
											480	28,900	26,800	24,600	22,100	18,100	13,300			
											40 Hz	38.9	31.3	27.5	24.4	18.6	13.3			
954230-BW-3	Black Int.*			Galv.							359	20,700	18,200	14,100	5,500				0.1	
											30Hz	60.6	49.1	34.3	12.2					
											300	16,200	13,100							
											25 Hz	77.2	55.4							

BW - Sable fan has a White exterior housing and a black interior housing.

SC - Stainless Steel Motor Mount and Hardware

54" SHUTTERS & CONE REINFORCEMENT

CATALOG NUMBER	ITEM DESCRIPTION	OUTSIDE DIMENSIONS HEIGHT x WIDTH	SHUTTER DIMENSIONS HEIGHT X WIDTH	SHIP WEIGHT LBS	SHIP WEIGHT KGS	LIST PRICE
SPM54W	54" Shutter - White PVC	61.5" x 61.5"	59" x 59"	0.0	0.0	
SPM54B	54" Shutter - Black PVC	61.5" x 61.5"	59" x 59"	0.0	0.0	
SPM54A	54" Shutter - Aluminum	61.35" x 61.35"	58.25" x 58.25"	0.0	0.0	
954108	Wire Guard in front of Shutter for 54" Fan			0.0	0.0	
954226	Kit, 54" Cone Reinforcement for Snow Load			49.7	22.5	

Toll-free: 1-800-99VALCO
Phone: (+1) 419-678-8731
Fax: (+1) 419-678-2200

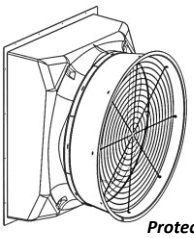

FIBERGLASS V-FAN SERIES

54" SLANT WALL DIRECT DRIVE V-FANS

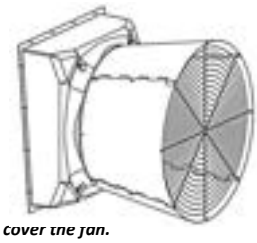

HOW TO ORDER

To order a complete 54" Hypermax fiberglass fan, select one each **FAN**, and one each **SHUTTER.**

Protection from snow or ice loads must be provided. An overhanging roof or snow guards on the roof must be provided to fully cover the fan.

VAL-CO® warranty does not apply for equipment against snow or ice damage.

If a fan is installed in a region that receives significant snowfall, Valco recommends a short cone fan (page 28-20).

GALVANIZED BLADE with SHORT CONE, INTERIOR MOUNT

CATALOG NUMBER	Housing	Cone Color	Blade	Mtr Mount	Motor	INPUT ELECTRIC Phase	Hertz	Volts	Amps	BESS #	BLADE SPEED RPM / Hz	Performance Numbers tested at 230v, 60Hz with Aluminum Shutters @ .00" SP CFM / CFM/W	@ .05" SP CFM / CFM/W	@ .10" SP CFM / CFM/W	@ .15" SP CFM / CFM/W	@ .20" SP CFM / CFM/W	@ .25" SP CFM / CFM/W	@ .30" SP CFM / CFM/W	SHIP Weight LBS. / KGS	LIST PRICE EACH
954835-1	White Fiberglass	White	Galvanized Blade	Galvanized Motor Mount	2.0 HP Fan Motor	Single Phase	50 / 60 Hz	200-240 Volts	12.9 Amps @ .30" SP	19486	603	33,200	32,000	30,700	29,300	27,900	26,200	24,400	0.0	
											50 Hz	19.7	18.0	17.0	15.8	14.8	13.7	12.4		
											482	27,000	25,400	23,500	21,600	19,200	16,000	7,500		
											40 Hz	29.9	26.8	24.0	21.5	18.7	15.3	7.2		
											361	19,800	17,600	14,500	6,700				0.0	
											30 Hz	49.9	41.7	32.7	14.6					
											301	15,900	12,700							
											25 Hz	65.0	49.6							
954835-3	White Fiberglass	White	Galvanized Blade	Galvanized Motor Mount	2.0 HP Fan Motor	Three Phase	50 / 60 Hz	200-240 Volts	6.8 Amps @ .30" SP	19478	600	33,000	31,900	30,500	29,200	27,500	26,100	24,200	0.0	
											50 Hz	19.9	18.6	17.3	16.2	14.9	13.8	12.6		
											479	27,000	25,100	23,300	21,300	18,800	14,700	6,900		
											40 Hz	30.8	27.1	24.4	21.9	18.9	14.6	6.8		
											359	19,900	17,500	14,500	6,400				0.0	
											30 Hz	52.0	43.2	33.9	14.5					
											300	16,100	13,200							
											25 Hz	67.2	52.2							

GALVANIZED BLADE with LONG CONE, INTERIOR MOUNT

954235-1	White Fiberglass	White	Galvanized Blade	Galvanized Motor Mount	2.0 HP Fan Motor	Single Phase	50 / 60 Hz	200-240 Volts	12.8 Amps @ .30" SP	19482	602	34,900	33,700	32,400	31,100	29,500	27,500	25,500	101.5	
											50 Hz	22	20	18.7	17.2	15.9	14.5	13.1		
											482	28,500	26,800	25,100	22,700	20,200	16,000	7,600		
											40 Hz	33.6	29.5	26.5	23.0	19.9	15.6	7.4		
											361	21,000	18,600	15,300	6,900				46.1	
											30 Hz	56.5	45.3	34.9	14.9					
											301	17,000	13,800							
											25 Hz	72.5	53.9							
954235-3	White Fiberglass	White	Galvanized Blade	Galvanized Motor Mount	2.0 HP Fan Motor	Three Phase	50 / 60 Hz	200-240 Volts	6.8 Amps @ .30" SP	19481	600	34,800	33,500	32,200	30,800	29,200	27,300	25,100	0.0	
											50 Hz	22.6	20.5	19.0	17.6	16.1	14.7	13.2		
											480	28,300	26,600	24,900	22,700	20,000	16,100	7,500		
											40 Hz	33.9	29.8	26.7	23.4	20.1	15.9	7.4		
											360	21,000	18,700	115,100	7,600				0.1	
											30 Hz	57.3	46.5	35.3	16.9					
											300	16,900	13,800							
											25 Hz	75.0	55.0							

54" SHUTTERS & CONE REINFORCEMENT

CATALOG NUMBER	ITEM DESCRIPTION	OUTSIDE DIMENSIONS HEIGHT x WIDTH	SHUTTER DIMENSIONS HEIGHT X WIDTH	SHIP WEIGHT LBS.	SHIP WEIGHT KGS	LIST PRICE
SPM54W	54" Shutter - White PVC	61.5" x 61.5"	59" x 59"	0.0	0.0	
SPM54B	54" Shutter - Black PVC	61.5" x 61.5"	59" x 59"	0.0	0.0	
SPM54A	54" Shutter - Aluminum	61.35" x 61.35"	58.25" x 58.25"	0.0	0.0	
954108	Wire Guard in front of Shutter for 54" Fan			0.0	0.0	
954226	Kit, 54" Cone Reinforcement for Snow Load			49.7	22.5	

Toll-free: 1-800-99VALCO
Phone: (+1) 419-678-8731
Fax: (+1) 419-678-2200

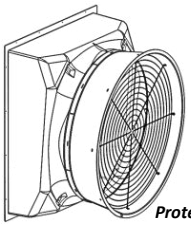

FIBERGLASS V-FAN SERIES

54" SLANT WALL DIRECT DRIVE V-FANS

3 PHASE 380-420 Volt INPUT

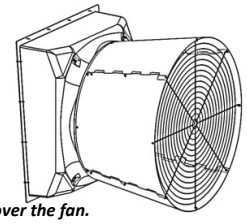

HOW TO ORDER

To order a complete 54" Hypermax fiberglass fan, select one each **FAN**, and one each **SHUTTER.**

Protection from snow or ice loads must be provided. An overhanging roof or snow guards on the roof must be provided to fully cover the fan.

VAL-CO® warranty does not apply for equipment against snow or ice damage.

If a fan is installed in a region that receives significant snowfall, Valco recommends a short cone fan (page 28-20).

SHORT CONE, INTERIOR MOUNT

CATALOG NUMBER	Housing	Cone Color	Blade	Mtr Mount	Motor	INPUT ELECTRIC Phase	Hertz	Volts	Amps	BESS #	BLADE SPEED RPM / Hz	Performance Numbers tested at 380v, 50Hz with Aluminum Shutters @ .00" SP CFM / CFM/W	@ .05" SP CFM / CFM/W	@ .10" SP CFM / CFM/W	@ .15" SP CFM / CFM/W	@ .20" SP CFM / CFM/W	@ .25" SP CFM / CFM/W	@ .30" SP CFM / CFM/W	SHIP Weight LBS. / KGS	LIST PRICE EACH
954830-33	White Fiberglass	White	Aluminum Blade	Galvanized Motor Mount	2.0 HP Fan Motor	Three Phase	50 / 60 Hz	380-420 Volts	2.95 Amps @ .30" SP	20478	632	35,100	33,700	32,500	31,000	29,500	27,900	26,100	1.3	
											52.5 Hz	18.3	16.9	15.8	14.8	13.7	12.7	11.7		
											603	33,500	32,000	30,700	29,100	27,400	25,700	22,800		
											50 Hz	20.0	18.5	17.3	15.9	14.6	13.5	11.8		
											482	26,800	25,000	23,100	20,900	17,700	14,100			
											40 Hz	31.3	27.6	24.6	21.6	17.9	13.9		0.7	
											362	19,100	17,100	14,000	5,000					
											30 Hz	52.7	43.1	33.5	10.4					
											301	15,600	12,600	3,500						
											25 Hz	68.6	51.5	11.8						
954835-33	White Fiberglass	White	Galvanized Blade	Galvanized Motor Mount	2.0 HP Fan Motor	Three Phase	50 / 60 Hz	380-420 Volts	3.06 Amps @ .30" SP	20477	602	33,000	31,900	30,600	29,300	28,000	26,400	24,700	0.0	
											50 Hz	20.1	18.8	17.5	16.4	15.4	14.1	13		
											482	26,900	25,400	23,800	21,800	19,200	16,400	8,200		
											40 Hz	30.2	27.4	24.9	22.2	19.4	16.4	8.3		
											361	20,100	17,900	15,000	8,900				0.0	
											30 Hz	52.2	43.7	234.8	20.1					
											301	16,200	13,300	5,400						
											25 Hz	66.4	52.1	19.6						

LONG CONE, INTERIOR MOUNT

CATALOG NUMBER	Housing	Cone Color	Blade	Mtr Mount	Motor	Phase	Hertz	Volts	Amps	BESS #	RPM / Hz	@ .00" SP CFM / CFM/W	@ .05" SP CFM / CFM/W	@ .10" SP CFM / CFM/W	@ .15" SP CFM / CFM/W	@ .20" SP CFM / CFM/W	@ .25" SP CFM / CFM/W	@ .30" SP CFM / CFM/W	SHIP Weight LBS. / KGS	LIST PRICE EACH
954230-33	White Fiberglass	White	Aluminum Blade	Galvanized	2.0 HP Fan Motor	Three Phase	50 / 60 Hz	380-420 Volts	3.57 Amps @ .30" SP	20474	632	37,400	36,000	34,600	33,000	31,300	29,500	27,400	32.2	
											52.5 Hz	20.9	19.4	17.8	16.3	14.9	13.7	12.4		
											603	35,600	34,200	32,700	31,100	29,100	24,100	24,700		
											50 Hz	23.0	20.9	19.2	17.6	15.9	14.4	12.9		
											482	28,800	26,900	24,700	22,000	19,100	15,300			
											40 Hz	36.0	31.2	26.9	22.8	19.5	15.0			
954230-SC-33				SS							361	20,800	18,200	14,600	6,500				14.7	
											30 Hz	61.1	47.5	34.8	14.0					
											301	16,700	13,500	4,900						
											25 Hz	78.9	55.7	17.5						
954235-33	White Fiberglass	White	Galvanized Blade	Galvanized Motor Mount	2.0 HP Fan Motor	Three Phase	50 / 60 Hz	380-420 Volts	3.04 Amps @ .30" SP	20475	602	34,800	33,500	32,200	31,000	29,400	27,800	25,700	0.0	
											50 Hz	22.6	20.8	19.2	17.8	16.4	15.2	13.7		
											482	28,500	26,900	25,000	23,100	20,100	16,800	16,900		
											40 Hz	34.3	30.3	26.6	23.8	20.6	16.9	9.7		
											361	21,000	18,800	15,700	8,200				0.1	
											30 Hz	57.8	46.9	36.8	18.5					
											301	16,800	14,200	6,100						
											25 Hz	72.0	57.1	18.3						

54" SHUTTERS & CONE REINFORCEMENT

CATALOG NUMBER	ITEM DESCRIPTION	OUTSIDE DIMENSIONS HEIGHT x WIDTH	SHUTTER DIMENSIONS HEIGHT X WIDTH	SHIP WEIGHT LBS.	SHIP WEIGHT KGS	LIST PRICE
SPM54W	54" Shutter - White PVC	61.5" x 61.5"	59" x 59"	0.0	0.0	
SPM54B	54" Shutter - Black PVC	61.5" x 61.5"	59" x 59"	0.0	0.0	
SPM54A	54" Shutter - Aluminum	61.35" x 61.35"	58.25" x 58.25"	0.0	0.0	
954108	Wire Guard in front of Shutter for 54" Fan			0.0	0.0	
954226	Kit, 54" Cone Reinforcement for Snow Load			49.7	22.5	

Toll-free: 1-800-99VALCO
Phone: (+1) 419-678-8731
Fax: (+1) 419-678-2200

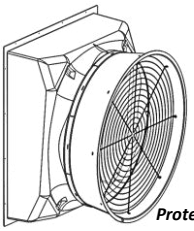

FIBERGLASS V-FAN SERIES

54" SLANT WALL DIRECT DRIVE V-FANS

3 PHASE 420-480 Volt INPUT

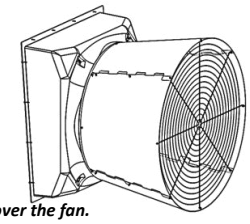

HOW TO ORDER

To order a complete 54" Hypermax fiberglass fan, select one each **FAN**, and one each **SHUTTER.**

Protection from snow or ice loads must be provided. An overhanging roof or snow guards on the roof must be provided to fully cover the fan.

VAL-CO® warranty does not apply for equipment against snow or ice damage.

If a fan is installed in a region that receives significant snowfall, Valco recommends a short cone fan (page 28-20).

SHORT CONE, INTERIOR MOUNT

CATALOG NUMBER	Housing	Cone Color	Blade	Mtr Mount	Motor	INPUT ELECTRIC Phase	Hertz	Volts	Amps	BESS #	BLADE SPEED RPM / Hz	Performance Numbers tested at 460v, 60Hz with Aluminum Shutters @ .00" SP CFM / CFM/W	@ .05" SP CFM / CFM/W	@ .10" SP CFM / CFM/W	@ .15" SP CFM / CFM/W	@ .20" SP CFM / CFM/W	@ .25" SP CFM / CFM/W	@ .30" SP CFM / CFM/W	SHIP Weight LBS. / KGS	LIST PRICE EACH
954830-34	White FG	White	Aluminum Blade	Galvanized Motor Mount	2.0 HP Fan Motor	Three Phase	50 / 60 Hz	420-480 Volts	2.57 Amps @ .30" SP	20486	632	35,200	33,800	32,400	30,900	29,500	27,900	26,200	1.3	
											52.5 Hz	18.7	17.3	16.0	14.9	13.8	12.8	11.8		
											600	33,400	32,200	30,600	29,200	27,500	25,800	23,700		
											50 Hz	20.3	18.9	17.4	16.1	14.9	13.6	12.3		
											479	26,900	25,200	23,200	20,800	18,200	10,500			
											40 Hz	31.5	27.9	24.8	21.5	18.3	10.6			
954830-BW-34	Black / White	Black									359	19,300	17,000	13,800	5,000				0.7	
											30 Hz	52.4	42.2	32.6	10.4					
											300	15,600	12,400	4,300						
											25 Hz	69.0	49.9	15.2						
954835-34	White FG	White	Galvanized Blade	Galvanized Motor Mount	2.0 HP Fan Motor	Three Phase	50 / 60 Hz	420-480 Volts	2.52 Amps @ .30" SP	20485	600	32,900	31,900	30,500	29,300	27,900	26,300	24,700	25.0	
											50 Hz	20.2	18.9	17.5	16.5	15.4	14.2	13.1		
											480	26,900	25,300	23,500	21,700	19,200	16,200	9,100		
											40 Hz	30.6	27.5	24.8	22.5	19.3	16.1	9.2		
954835-BW-34	Black / White	Black									360	20,100	17,800	14,900	8,600				11.4	
											30 Hz	52.3	43.0	34.9	19.6					
											300	16,200	13,400	3,800						
											25 Hz	66.5	51.1	13.4						

LONG CONE, INTERIOR MOUNT

CATALOG NUMBER	Housing	Cone Color	Blade	Mtr Mount	Motor	Phase	Hertz	Volts	Amps	BESS #	RPM / Hz	@ .00" SP CFM / CFM/W	@ .05" SP CFM / CFM/W	@ .10" SP CFM / CFM/W	@ .15" SP CFM / CFM/W	@ .20" SP CFM / CFM/W	@ .25" SP CFM / CFM/W	@ .30" SP CFM / CFM/W	SHIP Weight LBS. / KGS	LIST PRICE EACH
954230-34	White FG	White	Aluminum Blade	Galv.	2.0 HP Fan Motor	Three Phase	50 / 60 Hz	420-480 Volts	2.93 Amps @ .30" SP	20481	632	37,400	36,100	34,500	33,000	31,200	29,400	27,400	0.0	
											52.5 Hz	21.2	19.5	17.9	16.5	15.1	13.8	12.6		
											600	35,700	34,200	2,500	30,900	29,200	26,900	24,800		
											50 Hz	23.3	21.3	19.2	17.7	16.1	14.5	13.1		
954230-SC-34				SS							479	28,600	26,600	24,400	22,100	19,100	14,600			
											40 Hz	36.0	31.5	16.8	23.3	19.6	14.6			
954230-BW-34	Black/White			Galv.							359	20,600	17,900	14,600	8,400				0.1	
											30 Hz	59.5	46.7	35.3	18.2					
											300	17,000	13,800	3,900						
											25 Hz	79.3	56.4	13.4						
954235-34	White Fiberglass	White	Galvanized Blade	Galvanized Motor Mount	2.0 HP Fan Motor	Three Phase	50 / 60 Hz	420-480 Volts	2.49 Amps @ .30" SP	20482	600	34,800	33,500	32,200	30,900	29,300	27,600	25,600	120.7	
											50 Hz	22.8	20.9	19.3	17.8	16.5	15.1	13.7		
											480	28,300	26,800	25,100	22,700	20,300	16,800	9,400		
											40 Hz	33.9	30.6	27.0	23.6	20.4	16.8	9.5		
											360	21,500	19,200	15,600	9,000				54.8	
											30 Hz	57.8	45.7	36.3	20.3					
											300	16,800	14,200	5,300						
											25 Hz	69.9	56.0	19.2						

54" SHUTTERS & CONE REINFORCEMENT

CATALOG NUMBER	ITEM DESCRIPTION	OUTSIDE DIMENSIONS HEIGHT x WIDTH	SHUTTER DIMENSIONS HEIGHT X WIDTH	SHIP WEIGHT LBS.	SHIP WEIGHT KGS	LIST PRICE
SPM54W	54" Shutter - White PVC	61.5" x 61.5"	59" x 59"	0.0	0.0	
SPM54B	54" Shutter - Black PVC	61.5" x 61.5"	59" x 59"	0.0	0.0	
SPM54A	54" Shutter - Aluminum	61.35" x 61.35"	58.25" x 58.25"	0.0	0.0	
954108	Wire Guard in front of Shutter for 54" Fan			0.0	0.0	
954226	Kit, 54" Cone Reinforcement for Snow Load			49.7	22.5	

Toll-free: 1-800-99VALCO
Phone: (+1) 419-678-8731
Fax: (+1) 419-678-2200

FIBERGLASS FAN SERIES

54" HYPERMAX BELT DRIVE FANS - EXTERIOR MOUNT

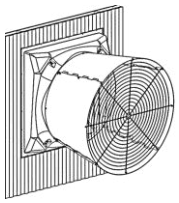

HOW TO ORDER

To order a complete 54" Hypermax fiberglass fan, select one each **FAN**, and one each **SHUTTER** as needed.

LONG CONE, EXTERIOR MOUNT

CATALOG NUMBER	Housing	Cone Color	Blade	Motor Mount	Motor / Electric HP/RPM	Phase	Hertz	Volts	Amps	BESS #	Performance Numbers tested with Aluminum Shutters @ .00" SP CFM / CFM/W	@ .05" SP CFM / CFM/W	@ .10" SP CFM / CFM/W	@ .15" SP CFM / CFM/W	@ .20" SP CFM / CFM/W	@ .25" SP CFM / CFM/W	@ .30" SP CFM / CFM/W	SHIP Weight Lbs. / Kg	LIST PRICE EACH
954201	White FG	White	Aluminum	Galv.	1.5 / 1725	Single	60 Hz	230 Volt	6.06A @ 230v @ .30 SP	15665	30,000	28,700	26,700	24,400	21,500	16,800	8,800	/	
											26.7	24.5	21.8	19.3	16.5	12.6	6.3		
954201-SC				SS														82 / 37	
954211	White FG	White	Aluminum	Galv.	1.5 / 1725	Single	60 Hz	230 Volt	6.98A @ 230v @ .30 SP	15666	31,600	30,200	28,600	26,600	24,000	21,000	15,800	/	
											24.4	22.2	20.3	18.1	15.9	13.6	10.0		
954211-SC				SS														59 / 27	
954206	White FG	White	Galvanized	Galvanized	1.5 / 1725	Single	60 Hz	230	5.91A @ 230v @ .30 SP	15664	29,400	28,000	26,600	24,700	22,400	19,000	14,200	111 / 50	
											26.1	23.9	21.8	19.8	17.3	14.3	10.5		
954216	White FG	White	Galvanized	Galvanized	1.5 / 1725	Single	60 Hz	230	7.13A @ 230v @ .30 SP	15667	31,600	30,300	28,900	27,200	25,100	22,400	18,900	/	
											23.0	21.2	19.5	17.8	16.0	14.0	11.7		
954246	White FG	White	Aluminum	Galv.	1.5 / 1725	Three	60 Hz	208-230/460	4.86A @ 230v @ .30 SP	15673	32,200	30,600	28,900	27,100	24,800	21,800	17,200	65 / 29	
											23.8	21.5	19.6	17.8	15.9	13.6	10.6		
954246-SC				SS														/	
954241	White FG	White	Galvanized	Galvanized	1.5 / 1725	Three	60 Hz	208-230/460	4.85A @ 230v @ .30 SP	15672	31,400	30,100	28,600	27,000	24,900	22,500	19,000	/	
											23.1	21.3	19.5	17.9	16.1	14.1	11.7		
954281	White FG	White	Aluminum	Galv.	1.5 / 1725	Three	60 Hz	208-230/460	6.56A @ 230v @ .30 SP	-	35,900	34,600	32,800	31,100	29,400	27,500	24,900	/	
											18.4	17.2	15.8	14.6	13.4	12.3	10.9		
954281-SC				SS														115 / 52	
954286	White FG	White	Galvanized	Galvanized	2.0 / 1725	Three	60 Hz	208-230/460	6.60A @ 230v @ .30 SP		33,500	32,200	30,900	29,100	27,700	25,700	23,400	71 / 32	
											18.4	17.2	15.8	14.6	13.4	12.3	10.9		
954256	White FG	White	Aluminum	Galv.	1.5 / 1425	Three	50 Hz	190 / 380	2.46A @ 380v @ .30 SP	17076	31,200	29,600	27,600	25,400	22,700	19,600	10,500	/	
											26.6	23.9	21.4	19.1	16.5	13.9	7.5		
954256-SC				SS														94 / 43	
954296	White FG	White	Galvanized	Galvanized	1.5 / 1425	Three	50 Hz	190 / 380	2.98A @ 380v @ .30 SP	17078	32,200	30,900	29,400	27,800	25,700	23,200	20,400	/	
											21.5	19.8	18.3	16.8	15.2	13.5	11.6		

SHORT CONE, EXTERIOR MOUNT

954811	White FG	White	Aluminum	Galv.	1.5 / 1725	Single	60 Hz	230	6.3A @ 230v @ .25 SP	22161	29,300	27,700	25,900	24,000	21,700	18,700	12,400	1 / 1	
											23.2	21.2	19.1	17.4	15.4	13.0	8.9		
954811-SSHW				SS														1 / 1	
954816	White FG	White	Galvanized	Galvanized	1.5 / 1725	Single	60 Hz	230	6.04A @ 230v @ 30 SP	22162	27,800	26,900	25,200	23,400	21,200	18,500	14,200	1 / 1	
											23.2	21.6	19.7	17.8	15.8	13.5	10.4		

HYPERMAX / V-FAN 54" SHUTTERS

CATALOG NUMBER	ITEM DESCRIPTION	OUTSIDE DIMENSIONS HEIGHT x WIDTH	SHUTTER DIMENSIONS HEIGHT x WIDTH	SHIP WGHT. LBS	SHIP WGHT. KGS	LIST PRICE
SPM54W	54" Shutter - White PVC	61.5" x 61.5"	59" x 59"	0.0	0.0	
SPM54B	54" Shutter - Black PVC	61.5" x 61.5"	59" x 59"	0.0	0.0	
SPM54A	54" Shutter - Aluminum	61.35" x 61.35"	58.25" x 58.25"	0.0	0.0	
954108	Wire Guard in front of Shutter for 54" Fan			0.0	0.0	

Toll-free: 1-800-99VALCO
Phone: (+1) 419-678-8731
Fax: (+1) 419-678-2200

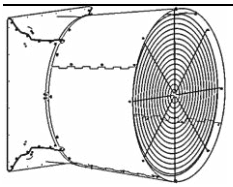

FIBERGLASS FAN SERIES

MACH 57™ 57" BELT DRIVE DAMPER FANS

Fan comes complete with Damper and Cone

VAL-CO® warranty does not apply for equipment against snow or ice damage.

MACH 57™ LONG CONE, EXTERIOR MOUNT

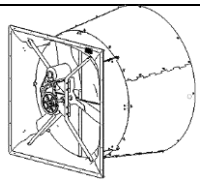

Fans are not recommended for use as min vent fans in cold or very cold climate regions (Zone 5, 6, 7, 8 ASHRAE Standard) without proper protection from condensation, ice, and wind.

Fans are not recommended to be installed facing prevailing winds without properly designed windbreaks located approximately 50 ft away to protect the fans from wind and snow drifts.

CATALOG NUMBER	Housing	Cone Color	Blade	Motor Mount	Motor / Electric HP / RPM	Phase	Hertz	Volts	Amps	BESS #	@ .00" SP CFM / CFM/W	@ .05" SP CFM / CFM/W	@ .10" SP CFM / CFM/W	@ .15" SP CFM / CFM/W	@ .20" SP CFM / CFM/W	@ .25" SP CFM / CFM/W	@ .30" SP CFM / CFM/W	SHIP Weight Lbs. / Kg	LIST PRICE EACH
Single Phase / 60Hz																			
957555	Black FG	Black	Galv.	Galv.	1.5 / 1725	Single	60 Hz	230V	7.1A @ 230v @ .4" SP	24077	33,300	31,200	29,400	26,800	24,000	20,800	16,900	/	
957555-KD-Q12											29.2	25.3	22.5	19.5	16.7	14.1	11.3	/	
957570	Black FG	Black	Galv.	Galv.	2.0 / 1725	Single	60 Hz	230V	8.5A @ 230v @ .4" SP	24069	36,200	34,400	32,600	30,500	28,400	25,600	22,900	/	
957570-KD-Q12											24.2	21.5	19.3	17.2	15.3	13.5	11.7	/	
957595	Black FG	Black	Galv.	Galv.	2.0 / 1725	Single	60 Hz	230V	7.7A @ 230v @ .4" SP	24067	33,800	31,800	29,900	27,400	24,500	21,600	18,300	/	
957595-KD-Q12											27.6	24.5	21.6	18.7	16.2	13.9	11.5	19 / 9	
Aluminum Blade, Single Phase / 60Hz																			
957565	Black FG	Black	Aluminum	Galv.	1.5 / 1725	Single	60 Hz	230V	7.6A @ 230v @ .4" SP	24078	35,300	32,800	30,000	26,800	24,200	21,300	17,200	1 /	
											27.9	24.0	20.8	17.8	15.6	13.6	10.9		
957565-SSHW	Black FG	Black	Aluminum	SS	1.5 / 1725	Single	60 Hz	230V	7.6A @ 230v @ .4" SP	24078	35,300	32,800	30,000	26,800	24,200	21,300	17,200	/	
											27.9	24.0	20.8	17.8	15.6	13.6	10.9		
Three Phase / 60Hz																			
957525	Black FG	Black	Galv.	Galv.	1.5 / 1725	Three	60 Hz	208-230 / 460V	4.8A @ 230v @ .4" SP	24081	33,300	31,200	29,100	27,000	23,900	20,700	17,400	513 / 233	
957525-KD-Q12											29.2	25.3	22.1	19.5	16.7	14.1	11.6	513 / 233	
957560	Black FG	Black	Aluminum	Galv.	1.5 / 1725	Three	60 Hz	208-230 / 460V	5.2A @ 230v @ .35" SP	26089	35,700	33,500	31,000	28,600	25,800	22,600	17,700	/	
957560-KD-Q12											25.7	22.7	19.9	17.7	15.4	13.2	10.4	#N/A	
957580	Black FG	Black	Galv.	Galv.	2.0 / 1725	Three	60 Hz	208-230 / 460V	5.5A @ 230v @ .35" SP	24080	35,900	34,100	32,000	30,000	27,500	24,900	22,100	1 / 1	
957580-KD-Q12											25.9	22.9	20.2	18.0	15.9	14.0	12.1	8 / 4	
Single Phase / 50Hz																			
957590	Black FG	Black	Galv.	Galv.	2.0 / 1425	Single	50 Hz	208-230V	9.5A @ 220v @ .4" SP	24072	34,000	32,000	30,100	27,600	24,900	21,500	18,400	/	
957590-KD-Q12											25.7	22.7	20.2	17.6	15.4	12.9	10.9	/	
Three Phase / 50Hz																			
957520	Black FG	Black	Aluminum	Galv.	2.0 / 1725	Three	50 Hz	190 / 380V	5.3A @ 190v @ .3" SP	26087	34,900	32,400	30,000	27,100	24,200	20,700	12,300	5 / 2	
957520-KD-Q12											27.5	23.9	20.9	18.1	15.6	13.2	8.0	1 /	
957530	Black FG	Black	Galv.	Galv.	1.5 / 1425	Three	50 Hz	190 / 380V	5.9A @ 190v @ .4" SP	24082	33,700	31,700	29,700	27,300	24,300	21,100	17,600	/	
957530-KD-Q12											27.5	24.0	21.1	18.5	15.9	13.5	11.0	/	

*** KD-Q12 - Knocked down quantity 12 is an unassembled version of 12 fans worth of parts packed to save space for shipping**

Mach 57 Accessories

922358	VFD - 200-240v, 1PH Input, For use with 957525 and 957560	33.8 / 15.3	

Fan Assembly Jig

950160	Knock Down Fixture for Fan Assembly	231.9 / 105.2	

Toll-free: 1-800-99VALCO
Phone: (+1) 419-678-8731
Fax: (+1) 419-678-2200

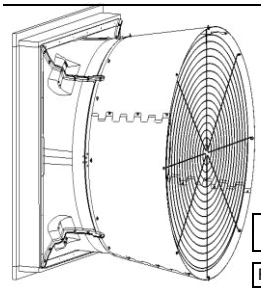

FIBERGLASS FAN SERIES

MACH 57™ 57" BELT DRIVE SHUTTER FANS

Fan comes with a Cone

VAL-CO® warranty does not apply for equipment against snow or ice damage.

MACH 57™ LONG CONE, EXTERIOR MOUNT

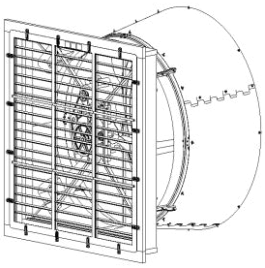

To ensure proper performance and prevent mechanical interference, a minimum distance must be maintained between the fan flange and the shutter flange (PVC - Min. 8.75" / Aluminum Min. 10.5")

Recommended to set the RO to spec listed on page 28-03, then add 2x4 lumber to create a 57" x 57" RO for fan to mount.

CATALOG NUMBER	Housing	Cone Color	Blade	Motor Mount	Motor / Electric					Test Shutter	BESS #	@ .00" SP	@ .05" SP	@ .10" SP	@ .15" SP	@ .20" SP	@ .25" SP	@ .30" SP	SHIP Weight	LIST PRICE EACH
					HP / RPM	Phase	Hertz	Volts	Amps			CFM / CFM/W	CFM / CFM/W	CFM / CFM/W	CFM / CFM/W	CFM / CFM/W	CFM / CFM/W	CFM / CFM/W	Lbs. / Kg	
Single Phase / 60Hz - Less Damper																				
957570-LD	Black FG	Black	Galvanized	Galvanized	2.0 / 1725	Single	60 Hz	230V	9.98A @ 230v @ .4" SP	Aluminukn	26092	35,600	34,100	31,900	30,000	28,100	25,700	23,100	/	
957570-LD-KD-Q12												20.9	19.2	17.4	15.8	14.4	12.8	11.2	/	
957570-LD	Black FG	Black	Galvanized	Galvanized	2.0 / 1725	Single	60 Hz	230V	9.84A @ 230v @ .35" SP	PVC	24069	32,700	31,000	29,800	27,600	25,400	22,700	19,300	/	
957570-LD-KD-Q12												18.4	16.4	15.8	14.0	12.7	11.0	9.2	/	
957595-LD	Black FG	Black	Galvanized	Galvanized	2.0 / 1725	Single	60 Hz	208-230V	8.49A @ 230v @ .35" SP	Aluminun	26095	33,800	32,000	30,200	28,200	25,900	23,300	18,200	/	
957595-LD-KD-Q12												22.2	20.1	18.4	16.6	14.8	13.0	9.9	/	
957595-LD	Black FG	Black	Galvanized	Galvanized	2.0 / 1725	Single	60 Hz	208-230V	8.90A @ 230v @ .35" SP	PVC	26094	31,300	29,500	28,100	25,700	23,600	20,700	14,000	/	
957595-LD-KD-Q12												19.7	18.0	16.5	14.7	13.1	11.3	7.5	/	

*** KD-Q12 - Knocked down quantity 12 is an unassembled version of 12 fans worth of parts packed to save space for shipping**

HYPERMAX / V-FAN 54" SHUTTERS

CATALOG NUMBER	ITEM DESCRIPTION	OUTSIDE DIMENSIONS HEIGHT x WIDTH	SHUTTER DIMENSIONS HEIGHT x WIDTH	SHIP WGHT. LBS	SHIP WGHT. KGS	LIST PRICE
SPM54W	54" Shutter - White PVC	61.5" x 61.5"	59" x 59"	0.0	0.0	
SPM54B	54" Shutter - Black PVC	61.5" x 61.5"	59" x 59"	0.0	0.0	
SPM54A	54" Shutter - Aluminum	61.35" x 61.35"	58.25" x 58.25"	0.0	0.0	
954108	Wire Guard in front of Shutter for 54" Fan			0.0	0.0	

Fan Assembly Jig

950160	Knock Down Fixture for Fan Assembly	231.9 / 105.2	

Toll-free: 1-800-99VALCO
Phone: (+1) 419-678-8731
Fax: (+1) 419-678-2200

WWW.VAL-CO.COM

BOX FANS

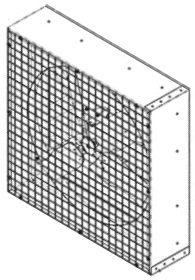

36" BOX FANS - DIRECT DRIVE

CATALOG NUMBER	ORIFICE SIZE	HOUSING MATERIAL	Phase	MOTOR/ELECTRIC HP / RPM	HZ	VOLTS	MATERIALS BLADE / MOTOR MOUNT	CFM	CFM/ Watt	BESS #	SHIP WEIGHT LBS.	SHIP WEIGHT KGS	LIST PRICE EACH
936425-ZM	36"	Z*	1	1/2	50	110/220	Galvanized	8900	19.1	C21241	32.2	14.6	
				850	60	115/ 208-230	Z	10470	18.7	C21240			
936435-ZM	36"	Z*	3	1/2	50	190/380	Galvanized	8830	26.3	C21230	45.1	20.5	
				850	60	230/460	Z	10190	21.0	C21229			

48" BOX FANS - BELT DRIVE

CATALOG NUMBER	ORIFICE SIZE	HOUSING MATERIAL	Phase	MOTOR/ELECTRIC HP / RPM	HZ	VOLTS	MATERIALS BLADE / MOTOR MOUNT	CFM / CFM/Watt	SHIP WEIGHT LBS.	SHIP WEIGHT KGS	LIST PRICE EACH
948425-ZM	48	Z*	1	1-1/2	60	230	Galvanized	24,420**	140.0	63.5	
				1725			Z	20.0**			

54" BOX FANS - BELT DRIVE

CATALOG NUMBER	ORIFICE SIZE	HOUSING MATERIAL	Phase	MOTOR/ELECTRIC HP / RPM	HZ	VOLTS	MATERIALS BLADE / MOTOR MOUNT	CFM / CFM/Watt	SHIP WEIGHT LBS.	SHIP WEIGHT KGS	LIST PRICE EACH
954425-ZM	54"	Z*	1	1-1/2	60	230	Galvanized	28500**	0.0	0.0	
				1725			Z	21.9**			
954435-ZM	54"	Z*	3	1-1/2	60	208-230/460	Galvanized	28500**	0.0	0.0	
				1725			Z	21.9**			

*** Z Protective coating used for the fan orifice, housing, and cone. 7 year rust through warranty on housings (Poultry Application).**

****Estimated**

HORIZONTAL AIRFLOW FANS

HAF SERIES AG CIRCULATING FANS

CATALOG NUMBER	ITEM DESCRIPTION	Bess #	MOTOR / Amps HP / RPM	CFM CFM / Watt	VOLTS PHASE-HERTZ	SHIPPING WEIGHT LBS.	SHIPPING WEIGHT KGS	LIST PRICE
HF24N01	24" Horizontal Airflow Fan, OSHA Compliant, Powder Coated White Guard	C23231	3.6 / 1.9 .50 / 1725	5130 10.9	115/230 1Ph-60Hz	0.0	0.0	
924430 924430-KD	24" Horizontal Airflow Fan, OSHA compliant Powder Coated White Guard KD is an Unassembled Version ** Estimated	C25476	2.3/1.2 .5 / 824	4290 11.9	230/460 3Ph-**60**Hz	10.9	4.9	
924430 924430-KD		-	2.0/1.0 .5 / 700	3650** 14.1	190/380 3Ph-**50**Hz	10.9	4.9	
936420 936420-KD	36" Horizontal Airflow Fan, OSHA compliant Powder Coated White Guard KD is an Unassembled Version	C23230	6.9 / 3.45 .5 / 825	9280 16.6	115/208-230 1Ph-**60**Hz	32.2	14.6	
936420 936420-KD		C23229	8.3 / 4.1 .5 / 700	7840 16.8	110/220 1Ph-**50**Hz	32.2	14.6	
936430 936430-KD	36" Horizontal Airflow Fan, Powder Coated White Guard KD is an Unassembled Version	C23227	2.3/1.2 .5 / 824	8990 19.3	230/460 3Ph-**60**Hz	38.7	17.6	
936430 936430-KD		C23228	2.0/1.0 .5 / 700	7570 24	190/380 3Ph-**50**Hz	38.7	17.6	

Catalog Number	Blade Dia. (in)	Basket Dia. (in)	Basket Ht (in)	Motor Ht (in)	Motor Protrusion (in)	Overall Height (in)
HF24N01	24	27.122	10.75	6.625	4.75	15.50
924430	24					
936420	36	39.122	10.25	8.00	6.00	16.25
936430	36	39.122	10.25	7.875	5.875	16.125

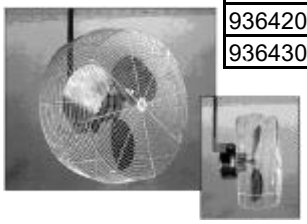

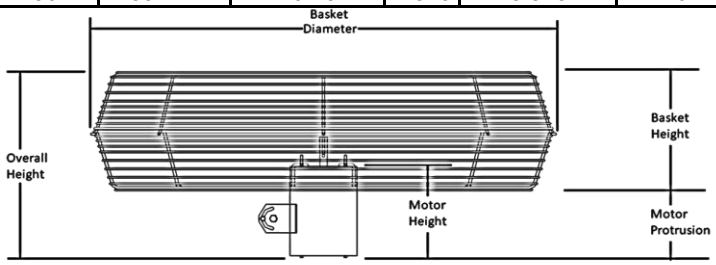

HAF SERIES AG CIRCULATING FANS - BRACKETS

980174	Truss Bracket for 12" thru 24" HAF Fans- Galvanized	8.0	3.6	
980172	Truss Bracket for 24" & 36" HAF Fans - Galvanized	5.0	2.3	
HFWB1224	Wall/Post Bracket for 12" thru 24" HAF Fans - Black Powder Coat	0.0	0.0	
972430	Wall/Post Bracket for 36" HAF Fans - Galvanized	0.0	0.0	
980175	Ceiling Bracket for 12"-24" HAF Fans - Galvanized	10.0	4.5	
HFCB36	Ceiling Bracket for 36" HAF Fans - Black Powder Coat	185.0	83.9	
924040	Chain Mount Bracket Kit - 24" HAF	132.5	60.1	
936040	Chain Mount Bracket Kit - 36" HAF	64.4	29.2	

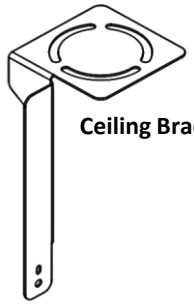

Ceiling Bracket

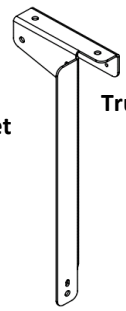

Truss Bracket

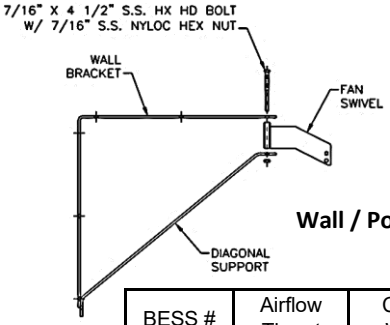

Wall / Post Bracket

Valco Eco-Air Fan

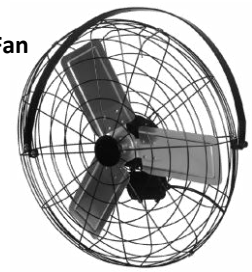

Valco Basket Eco-Air Stir Fan

		BESS #	Airflow Thrust	CFM/ Watt	Skid Qty	Lbs	Kgs	List price
918460	18" Fan - 1/8HP, 120v, 60Hz, 1P, 3 Spd, 2" spacing	C25009	1650	18.3	40	49.0	22.2	
920460	20" Fan - 1/6HP, 120v, 60Hz, 1P, 3 Spd, 2" spacing	C25010	2080	19.8	30	17.7	8.0	
924460	24" Fan - 1/4HP, 120v, 60Hz, 1P, 3 Spd, 2" spacing	C25011	2700	20	21	16.3	7.4	

All Eco-Air Fans come assembled with a 6' power cord and mounting brackets & hardware and includes a 2 year manufacturing warranty.

VAL-AIR™ FANS
International Sales Only

36" (91.4cm) Basket Fans

CATALOG NUMBER	ITEM DESCRIPTION	Bess #	MOTOR / Amps HP / RPM	CFM / CFM / Watt	VOLTS / PHASE-HERTZ	SHIPPING WEIGHT LBS.	SHIPPING WEIGHT KGS	LIST PRICE
936395-KD	36" VAL-AIR™ Fan, Poly Blade Powder Coated Black Guard	C23226	3.0 .5 / 900	12280 14.8	230 3Ph-60Hz	19.3	8.8	
936400-KD	36" VAL-AIR™ Fan, Poly Blade Powder Coated Black Guard	C23223	2.8 .5 / 810	10510 21.2	230 1Ph-60Hz	19.3	8.8	

KD - Knock Down version is an unassembled fan to save space and weight for Shipping
All Fans are not UL or CSA certified. Do not meet OSHA standards.

Catalog Number	Blade Dia. (in)	Basket Dia. (in)	Basket Ht (in)	Motor Ht (in)	Motor Protrusion (in)	Overall Height (in)
936xxx		43.909	8.334	8.70	8.61	16.95

FAN ACCESSORIES

PIT FAN ADAPTERS & ELBOWS

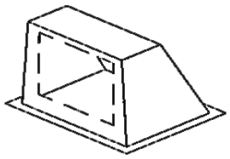

Pump Out Adapter

Vertical Fan Transition

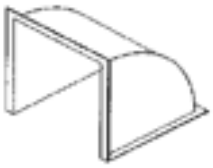

Pit Fan Elbow

PIT FAN ADAPTERS

CATALOG NUMBER	ITEM DESCRIPTION	SHIP WEIGHT		LIST PRICE
		LBS.	KGS.	
E407	Fiberglass Pit Fan Elbow for 21" PMC Fan / 24" FW Fan	0.0	0.0	
E505	Small Vertical Transition With 16" PMC Slides	0.3	0.1	
E506	Large Vertical Transition With 21" PMC Slides	0.0	0.0	
E507	Large Vertical Transition With 24" PMC Slides	0.1	0.0	
E604	Small Pumpout Adapter With 12" PMC Slides	0.0	0.0	
E605	Small Pumpout Adapter With 16" PMC Slides	0.1	0.0	
E606	Large Pumpout Adapter With 21" PMC Slides	0.0	0.0	
E607	Large Pumpout Adapter With 24" PMC Slides	0.2	0.1	

All E5XX-series pit fan adapters come standard with stainless steel slides.

FAN ACCESSORIES

WINTER DOORS & WIND DIVERTERS

WINTER DOORS

CATALOG NUMBER	ITEM DESCRIPTION	Ax	Ay	Bx	By	SHIP WEIGHT		LIST PRICE
						LBS.	KGS.	
WD405-12	Winter Door for 12" PMC Fan	20.00	20.00	17.68	17.68	0.0	0.0	
WD406	Winter Door Kit for 16" PMC Fan	24.25	24.25	21.93	21.93	0.0	0.0	
WD407-20	Winter Door for 21" PMC Fan	28.00	28.00	25.68	25.68	0.0	0.0	
WD408	Winter Door Kit for 24" PMC Fan	30.06	30.06	27.75	27.75	0.0	0.0	
WD409	Winter Door Kit for 36" Fan	45.31	45.31	43.00	43.00	1.0	1.0	
WD410	Winter Door Kit for 48" Fan	57.00	57.00	54.68	54.68	0.0	0.0	
WD411	Winter Door Kit for 50" Fan	57.00	59.06	54.68	56.74	1.7	1.0	
WD415	Winter Door Kit for 54" Fan	61.50	61.50	59.18	59.18	0.0	0.0	

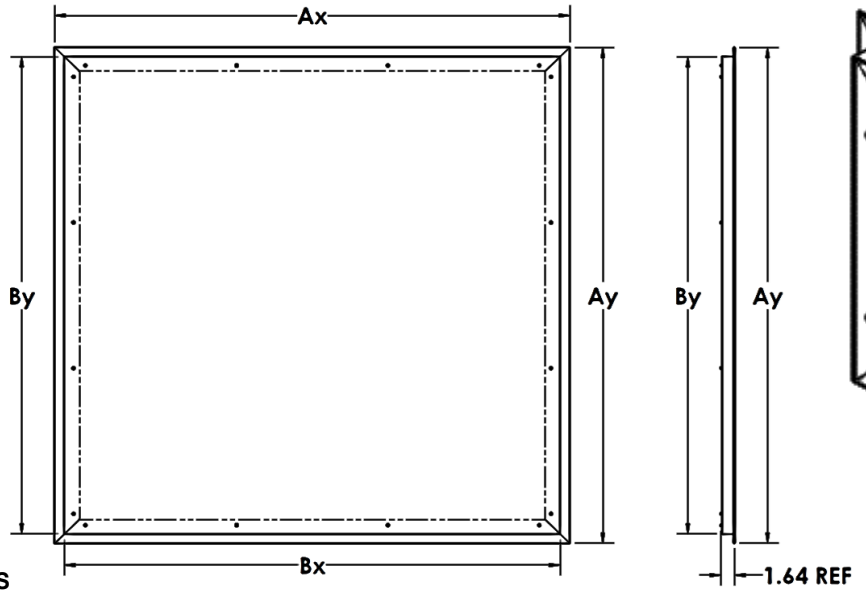

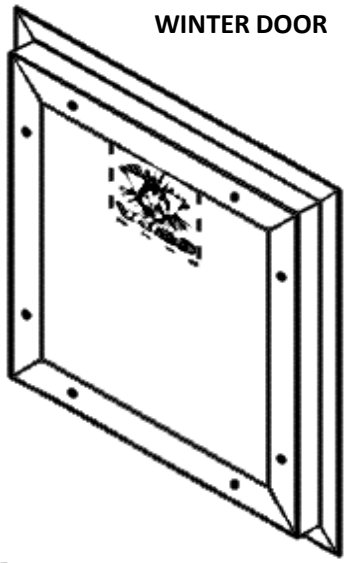

WIND DIVERTERS

CATALOG NUMBER	ITEM DESCRIPTION	SHIP WEIGHT		LIST PRICE
		LBS.	KGS.	
ZW1126	Wind Baffle for 12" PMC Fan	6.0	3.0	
ZW1125	Wind Baffle for 16" PMC Fan	8.0	4.0	
ZW1127	Wind Baffle for 21" PMC Fan	12.0	6.0	
ZW1129	Wind Baffle for 24" PMC Fan	12.0	6.0	

Wind Diverters include Baffle, Mounting Brackets and Hardware.

LIGHT TRAP KITS FOR IN FRONT OF EXHAUST FANS

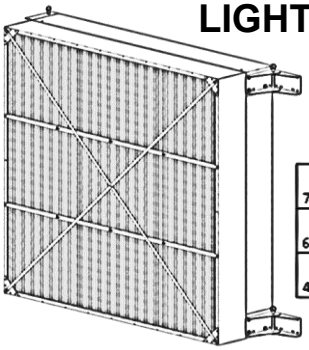

	A (Width Clearance)		B (Height Clearance)		C (Clearance in Closed Position)		D (Clearance in Open Position)	
	in	cm	in	cm	in	cm	in	cm
819000 72" X 72"	84	213.4	74.5	189.2	19	48.3	79	200.7
819010 60" X 60"	72	182.9	62.5	158.8	19	48.3	67	170.2
819020 48" X 48"	60	152.4	50.5	128.3	19	48.3	55	139.7

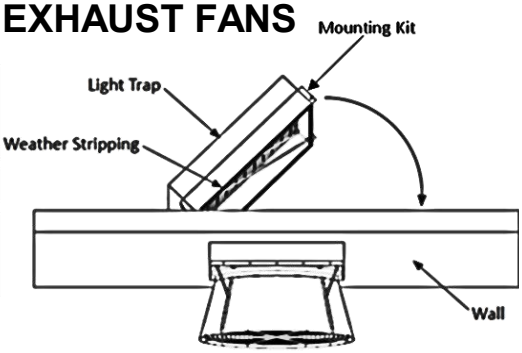

How to Order: - Order (1) Mounting Kit and (1) Framed Light Trap. Fan and shutters sold separately.

MOUNTING KITS - *Ships Unassembled* - ONLY USED WITH FRAMED LIGHT TRAPS

CATALOG NUMBER	ITEM DESCRIPTION	Typical used with Size Exhaust Fan	SHIP WEIGHT LBS.	SHIP WEIGHT KGS.	LIST PRICE
819020	9" Deep Mounting Kit for 48" x 48" Framed Light Trap	12" - 24"	#####	#####	
NAK48B48F	Light Trap 48H x 48W x 1" Spacing Galvanized Frame Assembled		5.0	3.0	
NAK48B48FU	Light Trap 48H x 48W x 1" Spacing Galvanized Frame Unassembled		0.0	0.0	
819010	9" Deep Mounting Kit for 60" x 60" Framed Light Trap	36" - 48"	#####	#####	
NAK60B60F	Light Trap 60H x 60W x 1" Spacing Galvanized Frame Assembled		0.0	0.0	
NAK60B60FU	Light Trap 60H x 60W x 1" Spacing Galvanized Frame Unassembled		0.0	0.0	
819000	9" Deep Mounting Kit for 72" x 72" Framed Light Trap	50" - 54"	#####	#####	
NAK72B72F	Light Trap 72H x 72W x 1" Spacing Galvanized Frame Assembled		174.7	80.0	
NAK72B72FU	Light Trap 72H x 72W x 1" Spacing Galvanized Frame Unassembled		0.0	0.0	

Light Traps in front of Exhaust Fans will increase the static pressure, see page 31-02 for air flow data or contact VAL-CO App. Engineering
Hinged design. Sits into Room 18" when door is closed

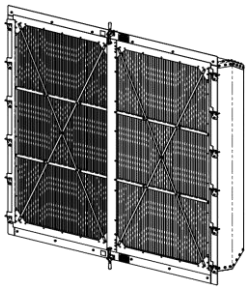

How to Order: - Order (1) Flush Mount Framed Light Trap. Fan & Shutters sold separately.

FLUSH MOUNT NightAir FAN TRANSITIONS (Black-out) - *Ships Unassembled*

CATALOG NUMBER	ITEM DESCRIPTION	Use With Exhaust Fan	SHIP WEIGHT LBS.	SHIP WEIGHT KGS.	LIST PRICE
819085	Flush Mount Framed Light Trap 42H x 42W x 1" - unassembled	24" FG Fans	#####	#####	
819025	Flush Mount Framed Light Trap 48H x 48W x 1" - unassembled	24" FG Fans	#####	#####	
819075	Flush Mount Framed Light Trap 60H x 72W x 1" - unassembled	36" FG Fans	#####	#####	
819045	Flush Mount Framed Light Trap 84H x 72W x 1" - unassembled	54" FG Fans	#####	#####	

FLUSH MOUNT ECLIPSE FAN TRANSITIONS (Brown-out) - *Ships Unassembled*

819225	Flush Mount Framed Light Trap 42H x 42W x 1" - unassembled	24" FG Fans	0.0	0.0	
819215	Flush Mount Framed Light Trap 60H x 72W x 1" - unassembled	36" FG Fans	0.0	0.0	
819245	Flush Mount Framed Light Trap 72H x 72W x 1" - unassembled	54" FG Fans	0.0	0.0	
819255	Flush Mount Framed Light Trap 84H x 72W x 1" - unassembled	54" FG Fans	0.0	0.0	

Light Traps in front of Exhaust Fans will increase the static pressure, see page 31-02 for air flow data or contact VAL-CO App. Engineering .
Light Trap is included. Hinged design. **For Fiberglass fans only. Please contact VAL-Co Engineering to use with galvanized fan.**

ADAPTER KITS

819240	Adapter kit to mount a Mach 57 Fan to either 819045 or 819255	57" FG Fans	0.0	0.0	
819265	Conversion Kit, Flush Eclipse - RO=52.25" W x 51" H	24" FG Fans		#####	
819260	Internal 50" Fan Adapter Kit for use with 819045 / 819255 Transition	57" FG Fans	0.0	0.0	

Toll-free: 1-800-99VALCO
Phone: (+1) 419-678-8731
Fax: (+1) 419-678-2200

Hemisphere® Centrifugal Circulation Fans

Hemisphere® Centrifugal Circulation Fans

CATALOG NUMBER	ITEM DESCRIPTION	SHIPPING WEIGHT LBS.	SHIPPING WEIGHT KGS	LIST PRICE
972420	Hemisphere Fan, 48" W/ Wire Guard, 32,000 cfm*, 1½ HP, 60 Hz, 1 PH, 115/208-230V, not VFD Controllable	16.8	8.0	
972420-Q2	Quantity of 2 - 972420 per skid	19.2	9.0	
972420-Q3	Quantity of 3 - 972420 per skid	67.2	31.0	
972420-Q4	Quantity of 4 - 972420 per skid	68.9	32.0	
972180	Hemisphere Fan, High Capacity, 48" W/ Wire Guard, 32,000 cfm*, 1½ HP, 60 Hz, 3 PH, 208-230/460 V, VFD Controllable	0.1	1.0	
972180-Q2	Quantity of 2 - 972180 per skid	0.1	1.0	
972180-Q3	Quantity of 3 - 972180 per skid	0.0	0.0	
972180-Q4	Quantity of 4 - 972180 per skid	0.0	1.0	
972120	Hemisphere Fan, 72" W/ Wire Guard, 45,500 cfm*, 1½ HP, 60 Hz, 3 PH, 208-230/460 V, VFD Controllable	101.0	46.0	
972120-Q2	Quantity of 2 - 972120 per skid	106.0	49.0	
972120-Q3	Quantity of 3 - 972120 per skid	109.0	50.0	
972120-Q4	Quantity of 4 - 972120 per skid	134.3	61.0	
972280	Hemisphere Fan, 72" W/ Wire Guard, 45,000 cfm*, 1½ HP, 60 Hz, 1 PH, 115/208-230 V, Not VFD Controllable	44.0	20.0	
972280-Q2	Quantity of 2 - 972280 per skid	5.8	3.0	
972280-Q3	Quantity of 3 - 972280 per skid	6.4	3.0	

* Estimated

** Motor Name Plate: 60Hz, 3HP, Volts 208-230/460, FL Amps 15-14.4/7.2, 3PH; 50Hz, 2HP, Volts 190/380, FL Amps 14/7

Hemisphere® Centrifugal Circulation Fan Options: Chimney Inlet, Shaft Conversion and Variable Speed Drive Panels

CATALOG #	ITEM DESCRIPTION	LBS.	KGS	LIST PRICE
812245	24" Chimney Kit, Hemisphere Fan, F/ Attic	0.0	0.0	
812265	24" Chimney Kit, Hemisphere Fan, W/ Dome Flashing & Bird Netting	0.0	0.0	
812230	24" Roof Chimney Flashing (peak)	0.0	0.0	
812340	30" Attic Inlet for Hemisphere Fans RO:32.5" x 35"	0.0	0.0	
812365	36" Chimney Kit, Hemisphere Fan, F/ Attic ***	0.0	0.0	
812385	36" Chimney Kit, Hemisphere Fan, W/ Dome & Bird Netting ***	0.0	0.0	
812330	36" Roof Chimney Flashing (peak)	0.0	0.0	
972139	Hex Shaft Conversion Parts for Welded Frame Hemisphere fans	608.0	276.0	
972194	Hex Shaft Conversion Parts for Round Shaft Hemisphere fans	0.0	1.0	
921893	VFD; 200-240 V, 1PH input, 7.0 Amp Out Max.	48.3	22.0	
922139	VFD; 200-240 V, 3PH input, 7.0 Amp Out Max.	90.6	42.0	
921885	Manual Fan Speed Reference Control Station	32.2	15.0	
921762	10A Motor Starter, IP55	77.3	36.0	

*** 36" chimneys to be used with 72" hemispheres

Hemisphere® Directional Centrifugal Circulation Fans & Z-Pro™ Hemisphere® Fans & Acc.

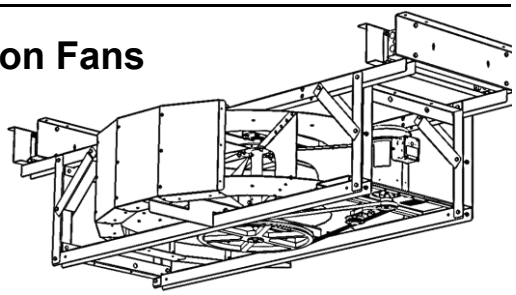

Directional Hemisphere® Centrifugal Circulation Fans

CATALOG NUMBER	ITEM DESCRIPTION	SHIPPING WEIGHT LBS.	SHIPPING WEIGHT KGS	LIST PRICE
972185	Directional Hemisphere Fan, High Capacity, 48" W/ Wire Guard, 21,000 cfm*, 1½ HP, 60 Hz, 3 PH, 208-230/460 V, VFD Controllable	0.0	0.0	
972185-Q2	Quantity of 2 - 972185 per skid	0.0	1.0	
972185-Q3	Quantity of 3 - 972185 per skid	0.0	1.0	
972185-Q4	Quantity of 4 - 972185 per skid	0.0	1.0	
972425	Directional Hemisphere Fan, High Capacity, 48" W/ Wire Guard, 21,000 cfm*, 1½ HP, 60 Hz, 1 PH, 115/208-230 V, Not VFD Controllable	71.0	33.0	
972425-Q2	Quantity of 2 - 972425 per skid	74.4	34.0	
972425-Q3	Quantity of 3 - 972425 per skid	0.0	0.0	
972425-Q4	Quantity of 4 - 972425 per skid	91.9	42.0	
972125	Directional Hemisphere Fan, Standard Capacity, 72" W/ Wire Guard, 30,000 cfm*, 1½ HP, 60 Hz, 3 PH, *230/460 V, VFD Controllable	44.9	21.0	
972125-Q2	Quantity of 2 - 972125 per skid	42.4	20.0	
972125-Q3	Quantity of 3 - 972125 per skid	1.6	1.0	
972125-Q4	Quantity of 4 - 972125 per skid	3.1	2.0	

* Estimated

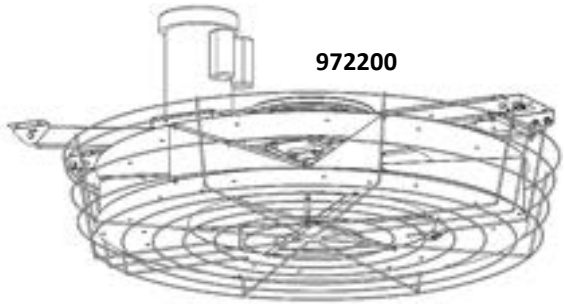

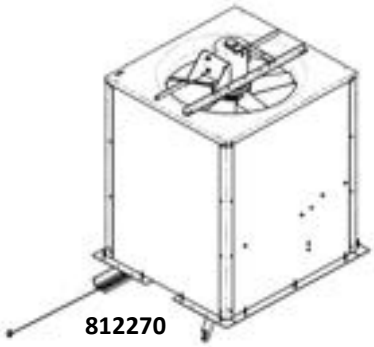

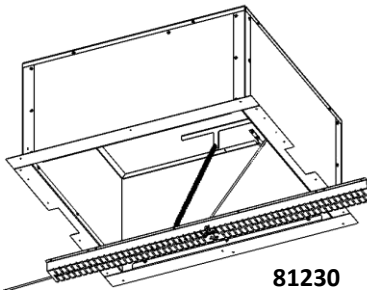

Z-Pro™ Hemisphere® Mixing Fans

972200	Hemisphere Fan, High Capacity, 42" W/ Wire Guard, Zinc-Plated Hardware 25,000 cfm*, 1½ HP, 60 Hz, 1 PH, 115/208-230V, Not VFD Controllable	0.2	1.0	
972200-SC	Hemisphere Fan, High Capacity, 42" W/ Wire Guard, Stainless Steel Hardware 25,000 cfm*, 1½ HP, 60 Hz, 1 PH, 115/208-230V, Not VFD Controllable	0.2	1.0	
972220	Hemisphere Fan, High Capacity, 42" W/ Wire Guard, Zinc-Plated Hardware 25,000 cfm*, 1½ HP, 60 Hz, 3 PH, 208-230/460V, VFD Controllable	0.2	1.0	
972220-SC	Hemisphere Fan, High Capacity, 42" W/ Wire Guard, Stainless Steel Hardware 25,000 cfm*, 1½ HP, 60 Hz, 3 PH, 208-230/460V, VFD Controllable	0.2	1.0	
972205	Kit includes 972200 Hemisphere Mixing Fan and 812305 Attic Inlet Kit	0.2	1.0	
972205-SC	Kit includes 972200-SC Hemisphere Mixing Fan and 812305 Attic Inlet Kit	0.2	1.0	
972225	Kit includes 972220 Hemisphere Mixing Fan and 812305 Attic Inlet Kit	0.2	1.0	
972225-SC	Kit includes 972220-SC Hemisphere Mixing Fan and 812305 Attic Inlet Kit	0.2	1.0	

Z-Pro™ Attic Kit and Accessories

812270	30" Attic Inlet Kit for Z-Pro Fans with 24" Panel Fan	0.0	0.0	
812305	30" Attic Inlet Kit for Z-Pro Fans RO:32.5" x 35"	0.0	0.0	
921893	VFD; 200-240 V, 1PH input, 7.0 Amp Out Max.	48.3	22.0	
922139	VFD; 200-240 V, 3PH input, 7.0 Amp Out Max.	90.6	42.0	
922371	VFD; 380-480V, 3PH input, 4.1 Amp Out Max.	48.3	22.0	
921885	Manual Fan Speed Reference Control Station	32.2	15.0	
921762	Motor Starter, 10 Amp, IP55	77.3	36.0	

This page left intentionally blank

SECTION 29
INLETS

IN THIS CATALOG SECTION

PAGE NUMBER	CONTENTS
29-02	9" Accuflow Curved and Accessories
29-03	TPI Inlets and Accessories & Valco Tunnel Inlet
29-04	12" Vinyl Inlets & Molded Wall Inlet & Accessories
29-05	12" Vinyl Continuous Inlets, Omniflux Inlets & Galvanized Inlets
29-06	Air Inlet Kits
29-07	Insulated Tunnel Inlet Doors
29-08	Ceiling Inlets
29-09 & 10	Chimneys
29-11	Curtains - Generating a Curtain Part Number
29-12	Curtain Components
29-13	Ceiling Material & Accessories
See Fan Section - 28	Hemisphere Fan Attic Inlets

Toll-free: 1-800-99VALCO
Phone: (+1) 419-678-8731
Fax: (+1) 419-678-2200

WWW.VAL-CO.COM

9" CURVED INSULATED SIDEWALL INLETS

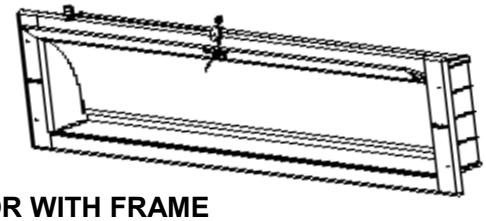

9" SIDEWALL INLET, INSULATED DOOR WITH FRAME

CATALOG #	ITEM DESCRIPTION	Qty	CFM @ 0.1 SP	Max Airflow Effective H	Max Airflow Effective W	Rough Opening		SHIP WEIGHT		LIST PRICE
						Height	Width	LBS.	KG.	
810022-Q4	CURVED INLET, 9" X 20"	4	921	8.85"	20"	11.25"	22.5"	25.0	11.3	
810009-Q4	CURVED INLET, 9" X 42"	4	1938	8.85"	42"	11.25"	44.5"	41.0	18.6	
810023-Q4	CURVED INLET, 9" X 54"	4	2489	8.85"	54"	11.25"	56.5"	58.4	26.5	
810022-Q120	CURVED INLET, 9" X 20" - 30 box of 4	120	921	8.85"	20"	11.25"	22.5"	777.3	352.6	
810009-Q92	CURVED INLET, 9" X 42" - 23 box of 4	92	1938	8.85"	42"	11.25"	44.5"	809.2	367.1	
810023-Q80	CURVED INLET, 9" X 54" - 20 box of 4	80	2489	8.85"	54"	11.25"	56.5"	1,198.1	543.4	

Note: Mounting Hardware not included. Actuation cord is provided up to attachment to homerun line.

SEPARATE FRAMED BIRD SCREEN ONLY FOR INLET

810046-Q4	BIRD SCREEN, CURVED INLET	4	9.36"	18"	11.25"	22.5"	5.7	2.6	
810042-Q4	BIRD SCREEN, CURVED INLET	4	9.36"	36.5"	11.25"	44.5"	10.0	4.5	
810047-Q4	BIRD SCREEN, CURVED INLET	4	9.36"	46.6"	11.25"	56.5"	12.4	5.6	

Note: Color is black
Note: Mounting Hardware not included.

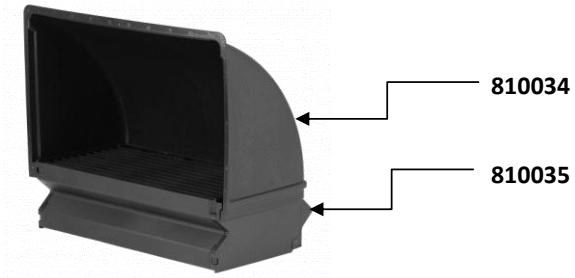

Weatherhood & Light Trap

CATALOG #	ITEM DESCRIPTION	SHIP WEIGHT		LIST PRICE
		LBS.	KGS.	
810034	Weatherhood, 24.5" wide X 16.5" tall (Fits over VWI190, 810022, VAI12INLET21)	2.9	1.3	
810035	Light Trap, 24.5" X 13.5" x 1" Spacing (use with 810034)	5.7	2.6	
816040	Weatherhood, 13" Tall x 56 5/8" Wide, Galvanized, Ships Unassembled (Fits over 810009 & 810023)	414.0	188.2	
VAIPLATCH	Plastic Vent Latch (works with Curved Inlets & 12" Vinyl)	0.0	0.0	

Toll-free: 1-800-99VALCO
Phone: (+1) 419-678-8731
Fax: (+1) 419-678-2200

WWW.VAL-CO.COM

TPI SIDEWALL INLETS

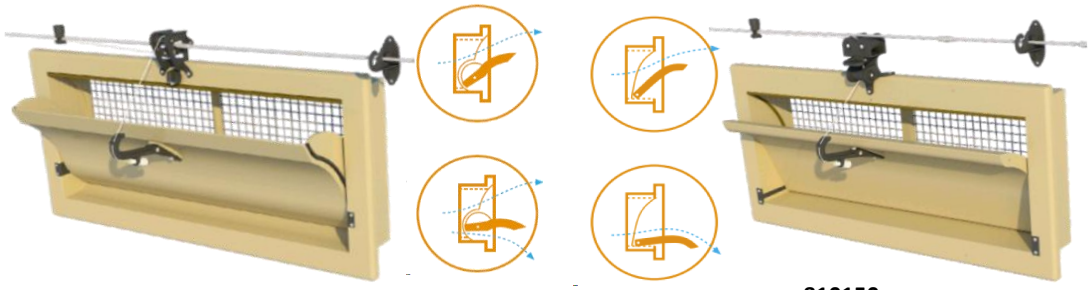

810190 810150

TPI SIDEWALL INLETS

CATALOG #	ITEM DESCRIPTION	CFM @ 0.1 SP	Max Airflow Effective H	Max Airflow Effective W	ROUGH OPENING DIMENSIONS E	F	SHIP WEIGHT LBS.	KG.	LIST PRICE
810150	Curve Inlet with Bottom Hinge - Tan {Includes: Connection Kit, Pulley, Closing Catch & Wire Mesh}	2693	12.2"	31.3"	34.2	15.2	9.2	4.2	
810190	Curve Inlet with Mid Hinge - Tan {Includes: Control Arm, Nylon Cord, Clamp, Pulley, Closing Catch with Spring & Wire Mesh}	2693	12.2"	31.3"	34.2	15.2	10.8	4.9	

TPI SIDEWALL INLETS ACCESSORIES

810240	Main Cable Support	0.1	0.0	
810214	Weatherhood, 43.3" wide x 28.9" tall x 14.5" Deep (Fits over 810150 and 810190)	8.0	3.6	
810215	Suspension Brackets (2) to Support (1) 810214	1.1	0.5	
810216	Light Trap for 810214	0.3	0.1	
810212	TPI Inlet Exclusion Panel (use with 810214) (Can not be used with 810216)	2.7	1.2	
VAIPLATCH	Plastic Vent Latch (works with Curved Inlets & 12" Vinyl)	0.0	0.0	

TUNNEL INLETS

TUNNEL INLETS

810260	Tunnel Inlet Kit- 1200mm x 1200mm (1220mm x 1220mm Rough Opening)	51.0	23.1	
810260-KD	Tunnel Inlet Kit - 1200mm x 1200mm (1220mm x 1220mm Rough Opening) - Unassembled	51.0	23.2	
810265	Tunnel Inlet Kit - 1500mm x 1500mm (1520mm x 1520mm Rough Opening)	65.0	29.5	
810265-KD	Tunnel Inlet Kit - 1500mm x 1500mm (1520mm x 1520mm Rough Opening) - Unassembled	65.0	29.5	

TUNNEL INLETS ACCESSORIES

810267	L-Shaped Mounting Bracket	0.1	0.0	
810268	Grip Nut, Nylon Rope - 2 Piece	0.1	0.0	
810271	Tunnel Inlet Replacement Door - 810260	5.0	2.3	
810272	Tunnel Inlet Replacement Door - 810265	5.0	2.3	

INLETS

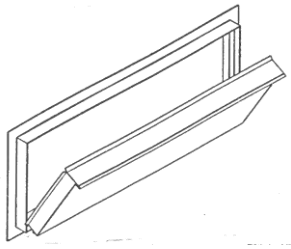

12" DOOR & FRAME ALL VINYL INSULATED INLET (SEE INFO BELOW TO ORDER WITH SCREENED FRAME)

CATALOG #	ITEM DESCRIPTION	CFM @ 0.1 SP	Max Airflow Effective W	Max Airflow Effective H	Rough Opening		LIST PRICE WITHOUT SCREEN	LIST PRICE WITH SCREEN*
					Width	Height		
VAI12INLET21	12" X 21" Door (14" x 24" Frame Size), Black	1275	21.1"	11.6"	21"	12"		
VAI12INLET33	12" X 33" Door (14 x 36" Frame Size), Black	2000	33.1"	11.6"	33"	12"		
VAI12INLET45	12" X 45" Door (14 x 48" Frame Size), Black	2725	45.1"	11.6"	45"	12"		

Weatherhood & Accessories

		LBS.	KGS.	List PRICE
810034	Weatherhood, 24.5" wide X 16.5" tall (Fits over VWI190, 810022, VAI12INLET21)	2.9	1.3	
VAIPLATCH	Plastic Vent Latch (works with Curved Inlets & 12" Vinyl)	0.0	0.0	

* To include screened frame, add "S" to the end of the catalog number; example, VAI12INLET21S

Note: Mounting Hardware not included.

12" INLET DOOR - ALL VINYL INSULATED INLET WITH HINGE - FRAMELESS

CATALOG #	ITEM DESCRIPTION	CFM @ 0.1 SP	Max Airflow Effective H	Max Airflow Effective W	Rough Opening		SHIP WEIGHT		LIST PRICE
					Height	Width	LBS.	KGS.	
810170	Inlet Door Assembly, 12" x 48" Black Door with Black Hinge and End Caps	2845	11.5"	47.5"	11.5"	47.5"	4.72	2.14	
810183	Inlet Door Assembly, 12" x 94" Black Door with Black Hinge and End Caps	5600	11.5"	93.5"	11.5"	93.5"	8.80	3.99	
810185	Inlet Door Assembly, 12" x 94" White Door with Black Hinge and End Caps	5600	11.5"	93.5"	11.5"	93.5"	8.80	3.99	

Note: Mounting Hardware not included.

MOLDED WALL INLET

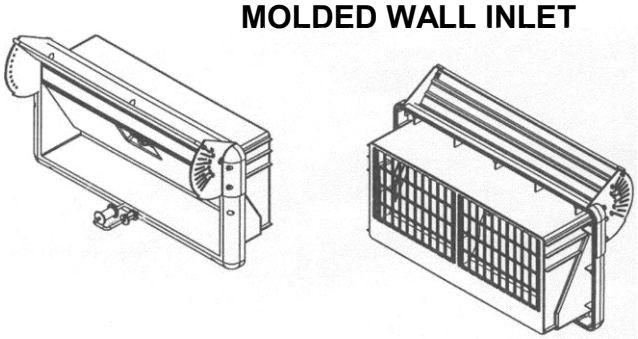

Molded Wall Inlet

CATALOG #	ITEM DESCRIPTION	CFM @ 0.05 SP	CFM @ 0.10 SP	CFM @ 0.15 SP	Rough Opening		SHIP WEIGHT		LIST PRICE
					Width	Height	LBS.	KGS.	
VWI190-Q5	Molded Wall Inlet Assembly Quantity of 5	570	870	1050	21-3/4"	10-3/8"	44.0	20.0	
810034	Weatherhood, 24.5" wide X 16.5" tall (Fits over VWI190, 810022, VAI12INLET21)						2.9	1.3	

INLETS

OMNIFLUX

CATALOG #	ITEM DESCRIPTION	SHIP WEIGHT LBS.	SHIP WEIGHT KGS.	LIST PRICE
810217	Sidewall Inlet, actuatrd closed, 3767 CFM @ .16sp	11.4	5.2	

Weatherhood & Light Trap

CATALOG #	ITEM DESCRIPTION	SHIP WEIGHT LBS.	SHIP WEIGHT KGS.	LIST PRICE
810220	Weatherhood, 38.4" x 37.0" x 24.3" Deep	9.0	4.1	
810218	Suspension Brackets (2) to Support (1) 810220	2.0	0.9	
810219	Light Trap for 810220	50.0	22.7	

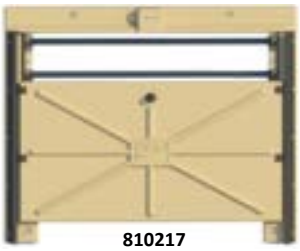

810217

12" CONTINUOUS INLET DOOR
ALL VINYL INSULATED INLET WITH HINGE

CATALOG #	ITEM DESCRIPTION				Rough Opening Height	SHIP WEIGHT LBS.	SHIP WEIGHT KGS.	LIST PRICE
VAI12SWSI96K	Continuous Inlet End Kit, 12" x 96" Black Door, with black Hinge & End Caps				11.5"	9.7	4.4	
VAI12SWCI96K	Continuous Inlet Kit, 12" x 96" Black Door and Hinge				11.5"	8.7	3.9	
810178	Continuous Inlet Kit, 12" x 96" White Door with Black Hinge				11.5"	8.8	4.0	
810180	Continuous Inlet End Kit, 12" x 96" White Door with Black Hinge & End Caps				11.5"	9.9	4.5	

Note: Mounting Hardware not included.

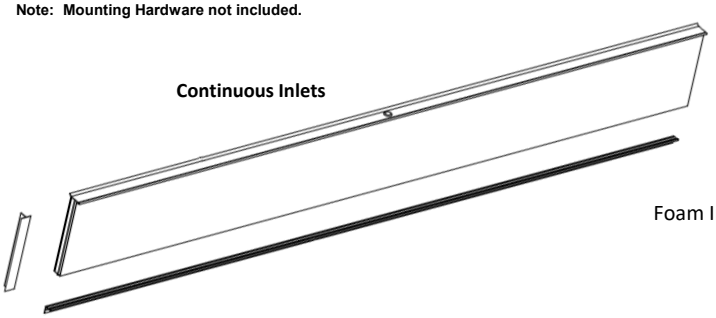

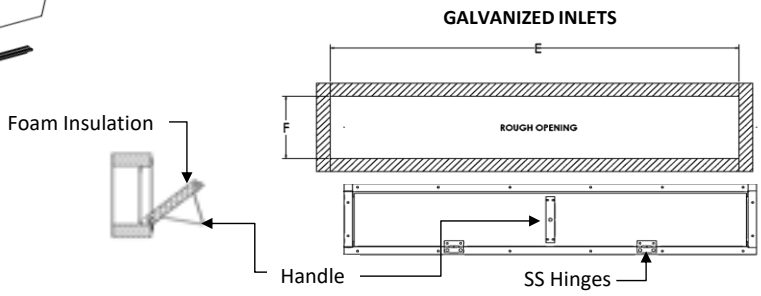

GALVANIZED INLETS

GALVANIZED SIDEWALL INLETS

CATALOG #	ITEM DESCRIPTION	CFM @ 0.1 SP	Max Airflow Effective H	Max Airflow Effective W	ROUGH OPENING DIMENSIONS E	ROUGH OPENING DIMENSIONS F	SHIP WEIGHT LBS.	SHIP WEIGHT KG.	LIST PRICE
450657	45.75" x 4.75" Door Size	845	44.75"	3.625"	46-1/2"	5-1/4"	0.0	0.0	
450686	41.75" x 6.75" Door Size	1194	40.75"	5.625"	42-1/2"	7-1/4"	15.8	7.1	
450631	43.75" x 6.75" Door Size	1252	42.75"	5.625"	44-1/2"	7-1/4"	16.9	7.6	
450648	45.75" x 6.75" Door Size	1311	44.75"	5.625"	46-1/2"	7-1/4"	16.9	7.6	
450656	53.75" x 6.75" Door Size	1545	52.75"	5.625"	54-1/2"	7-1/4"	17.9	8.1	
450709	57.75" x 6.75" Door Size	1663	56.75"	5.625"	58-1/2"	7-1/4"	14.0	6.3	

Note: Mounting Hardware not included.

Toll-free: 1-800-99VALCO
Phone: (+1) 419-678-8731
Fax: (+1) 419-678-2200

AIR INLET KITS

CATALOG #	ITEM DESCRIPTION	CFM @ 0.1 SP	Max Airflow Effective H	Max Airflow Effective W	ROUGH OPENINGS			SHIP WEIGHT		LIST PRICE
					A	B	C	LBS.	KG.	
680127	12" Air Inlet Kit x 4' Long	2650	11.9"	42.75"	13.4"	11.9"	13.4"	12.0	5.4	

Mounting Hardware not included

680127

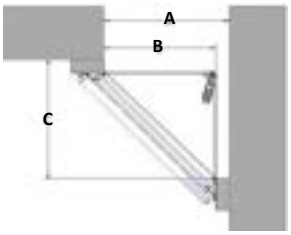

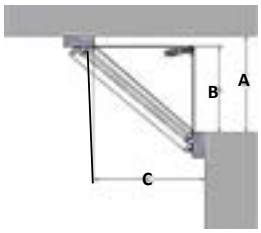

Dual Air Inlet Kits

CATALOG #	ITEM DESCRIPTION	CFM @ 0.1 SP	Max Airflow Effective H	Max Airflow Effective W			LIST PRICE
					LBS.	KG.	
680382	12" Back-to-Back Air Inlet Kit x 4"	5300	23.8"	42.75"	37.0	16.8	

Mounting Hardware not included

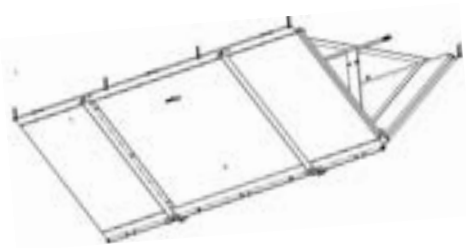

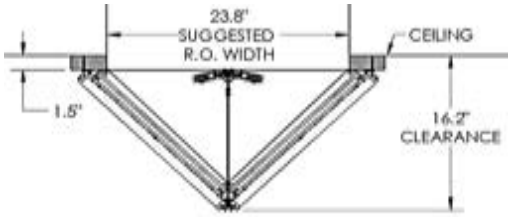

Inlet Accessories

CATALOG #	ITEM DESCRIPTION	SHIP WEIGHT		LIST PRICE
		LBS.	KG.	
810165	12" Air Inlet Bi-Directional Seal Kit	1.1	0.5	
680130	9" Air Inlet End Cap Kit (1 Kit per Row Required)	1.1	0.5	
680128	12" Air Inlet End Cap Kit (1 Kit per Row Required)	2.0	0.9	

INSULATED TUNNEL INLET DOORS

Contact Application Engineering for your personalized Quote

Quote@val-co.com

Toll-free: 1-800-99VALCO
Phone: (+1) 419-678-8731
Fax: (+1) 419-678-2200

CEILING INLETS

Bi-Flo Ceiling Inlet

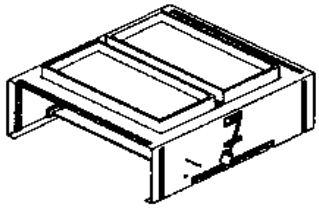

CEILING COUNTER WEIGHTED CEILING INLETS
CLAD VALVE

Obsolete Inlet - limited quantities

CATALOG #	ITEM DESCRIPTION	CFM @ 0.1 SP	Max Airflow W	Max Airflow L	Rough Opening		SHIP WEIGHT		LIST PRICE
							LBS.	KGS.	
I306C	Bi-Flo Ceiling Inlet	1200	10.5"	21.68"	12-7/8"	22-5/8"	11.0	5.0	

Sold individually. Price includes insulation collar.

Mounting Hardware not included

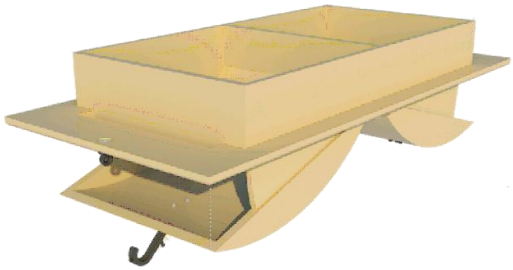

TPI CEILING INLETS

CATALOG #	ITEM DESCRIPTION	CFM @ 0.05 SP	CFM @ 0.10 SP	CFM @ 0.15 SP	Rough Opening		SHIP WEIGHT		LIST PRICE
							LBS.	KGS.	
810210	Bi-Flo Ceiling Inlet	2104	2976	3646	20.28"	39.69"	12.6	5.7	
810204	Ceiling Inlet Connection Kit (need (2) for each 810210)						0.0	5.7	

Toll-free: 1-800-99VALCO
Phone: (+1) 419-678-8731
Fax: (+1) 419-678-2200

CHIMNEYS

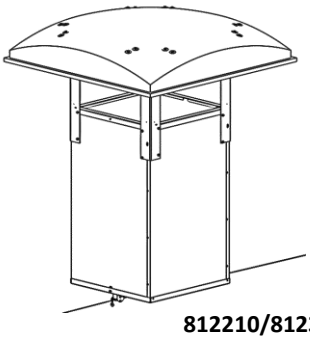

812210/812310

812240/812360

Natural Flo 24" CHIMNEYS

CATALOG #	ITEM DESCRIPTION	Rough Opening		SHIP WEIGHT LBS.	SHIP WEIGHT KGS.	LIST PRICE
812210	24" Chimney, Shaft, Damper and Dome	27-1/2"	27-1/2"	72.5	32.9	
812240	24" Chimney Kit - Includes roof flashing and Stainless Steel bird netting	27-1/2"	27-1/2"	85.3	38.7	

24" Chimney Options

812220	24" Chimney Bird Netting Kit - PVC Coated 20GA Galv Wire			15.4	7.0	
812222	24" Chimney Bird Netting Kit - 20G 304 Stainless Steel			2.4	7.0	
812225	24"/36" Chimney Bird Spike 304SS			1.5	0.7	
812230	24" Chimney Roof Peak Flashing			15.4	7.0	
R702	24" Chimney Winter Door			3.0	1.4	
812250	4' Tall 24" Chimney Extension			35.8	1.4	
812121	24" Bird Netting Corner Bracket			0.6	1.4	

Repair Items

812051	Chimney Repair Parts Kit (Includes hardware, pulleys, springs, hinge, cables, etc.)			1.4	0.6	
ZR1710	24" Chimney Dome			20.3	9.2	
ZR1768	24" Chimney Dome Mounting Bracket			2.8	1.3	
812054-Q2	24" Aluminum Skin Chimney Wrap Kit, 24" Tall - Quantity 2			34.4	1.3	
812059-Q2	24" Aluminum Skin Chimney Wrap Kit, 30" Tall - Quantity 2			42.9	1.3	

Natural Flo 36" CHIMNEYS

CATALOG #	ITEM DESCRIPTION	Rough Opening		SHIP WEIGHT LBS.	SHIP WEIGHT KGS.	LIST PRICE
812310	36" Chimney, Shaft, Damper and Dome	36-1/2"	36-1/2"	119.8	54.4	
812360	36" Chimney Kit - Includes roof flashing and Stainless Steel bird netting	36-1/2"	36-1/2"	141.6	63.0	

36" Chimney Options

812320	36" Chimney Bird Netting Kit - PVC Coated 20GA Galv Wire			3.2	2.3	
812322	36" Chimney Bird Netting Kit - 20G 304 Stainless Steel			6.9	2.3	
812225	24"/36" Chimney Bird Spike 304SS			1.5	0.7	
812330	36" Chimney Roof Peak Flashing			21.4	9.7	
R712	36" Chimney Winter Door			3.0	1.4	

Repair Items

812051	Chimney Repair Parts Kit (Includes hardware, pulleys, springs, hinge, cables, etc.)			1.4	2.3	
ZR1710A	36" Chimney Dome			51.8	0.6	
812026	36" Chimney Dome Mounting Bracket			3.5	1.6	
812114-Q6	36" Aluminum Skin Chimney Wrap Kit, 24" Tall - Quantity 6			156.0	1.3	

Complete chimneys 812240 and 812360 include:
4' shaft, damper, dome, dome mounting brackets, perimeter bird netting, roof flashing, actuation cords and pulleys up to homerun line & assembly hardware.

Hardware for mounting to the rough opening is not included.

Toll-free: 1-800-99VALCO
Phone: (+1) 419-678-8731
Fax: (+1) 419-678-2200

CURTAINS

How to Generate a Curtain Part Number

	Part Number:
1. All part numbers start with "816-10"	**816-10**
2. Choose a nominal height Rule: Must be 2 ft to 9 ft tall in foot increments.	
"02" for 2 feet tall	816-10**02**
"03" for 3 feet tall	816-10**03**
"04" for 4 feet tall	816-10**04**
"05" for 5 feet tall	816-10**05**
"06" for 6 feet tall	816-10**06**
"07" for 7 feet tall	816-10**07**
"08" for 8 feet tall	816-10**08**
"09" for 9 feet tall	816-10**09**
3. Choose a Material/Color	
"2" for Black Poly-plus .009" thick curtain (5.6 OZ/SQ-YD)	816-1002**2**
"3" for Blue Poly-plus .010" thick curtain (5.3 OZ/SQ-YD)	816-1002**3**
"4" for Black/White Poly-plus .009" thick curtain (5.8 OZ/SQ-YD)	816-1002**4**
"81" for Clear Medium-Duty .010" thick curtain (5.3 OZ/SQ-YD)	816-1002**81**
4. Choose a Length Rule: Lengths are 40 ft to 200 ft in increments of 20', then 200 ft to 700 ft in increments of 50'	
"-040" would mean 40'	816-10022-**040**
"-150" would mean 150'	816-10022-**150**
Examples: If you want a 65 ft long curtain, you would order 80'. If you want a 465 ft long curtain, you would order 500'.	
5. Choose the number of Hems Rule 1: No "-3-1836" hem curtains under 6 feet nominal height Rule 2: No "-3-1836" hem curtains over 300 feet long	
"-0" means no hems (nominal height = final height)	816-10022-040-**0**
"-1" means 1 hem at the top. (this will subtracts 3" from the nominal height to get the final height) Example: 816-100**2**3-080-1 has a final height of 1'9".	816-10023-080-**1**
"-3-1836" means 3 hems with 1 being at the top, one being 18" down from the top and 1 being 36" down from the top. This will subtract 15" from the nominal height to get the final height. Example: 816-100**6**81-250-3-1836 has a final height of 4'9".	816-100681-250-3-**1836**

Final Examples:	Descriptions
816-10022-040-0	CURTAIN,BLACK(5.6OZ),40'X 2'0",W/NO HEM
816-10023-080-1	CURTAIN,BLUE(5.3OZ),80'X 1'9",W/SGL HEM
816-100681-250-3-1836	CURTAIN,CLEAR(5.3OZ),250'X 4'9",W/SGL+2MID-HEMS 18&36"

Additional Information:
Aprons have 1 hem so please use parts ending in "-1" as equivalent
End Pockets do not have hems so use parts ending in "-0" as equivalent

For inquiries of taller, longer, or different materials than what is listed above, please contact Product Management.
For any questions on quoting, please contact Application Engineering.

CURTAINS

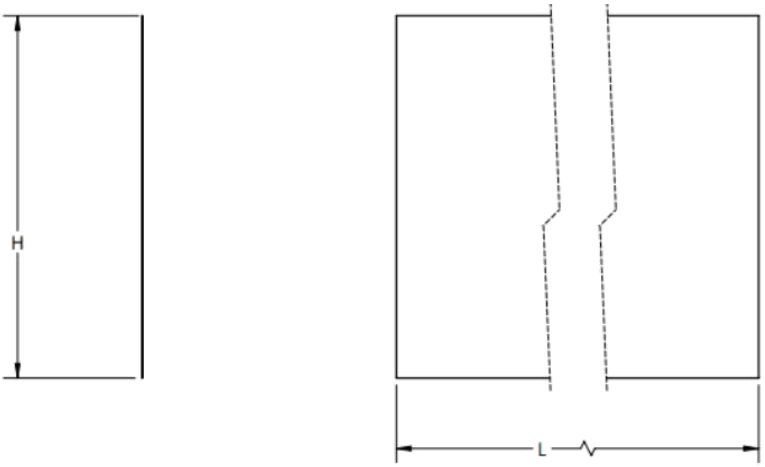

816-100Z2-YYY-0

100**Z**2: Black Poly-Plus 0.009" Thick (5.6oz/SQ-YD)

100**2**2: H = 2'
100**3**2: H = 3'
100**4**2: H = 4'
100**5**2: H = 5'
100**6**2: H = 6'
100**7**2: H = 7'
100**8**2: H = 8'
100**9**2: H = 9'

YYY: L =Length in Feet]
(if "YYY" is 160 then L-160'

Example: 816-10092-160-0
9' Tall Black Curtain 160' Long No Hem

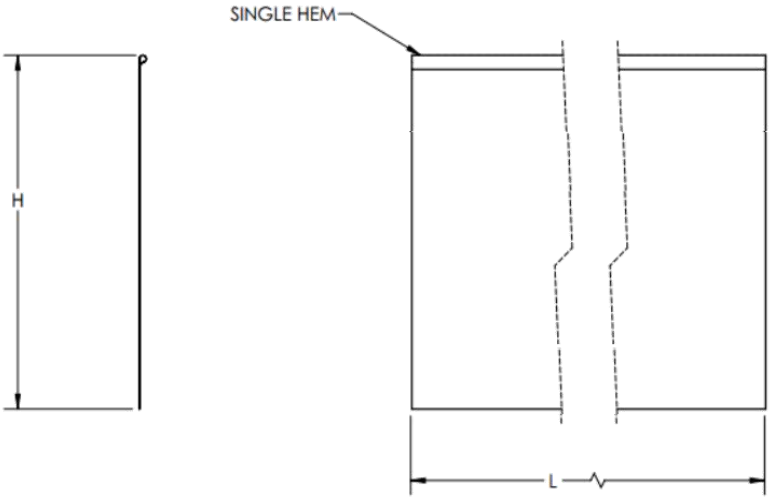

816-100Z3-YYY-1

100**Z**3: Blue Poly-Plus 0.010" Thick (5.3oz/SQ-YD)

100**2**3: H = 1' 9"
100**3**3: H = 2' 9"
100**4**3: H = 3' 9"
100**5**3: H = 4' 9"
100**6**3: H = 5' 9"
100**7**3: H = 6' 9"
100**8**3: H = 7' 9"
100**9**3: H = 8' 9"

YYY: L =Length in Feet
(if "YYY" is 200 then L-200'

Example: 816-10063-200-1
5' 9" Tall Blue Curtain 200' Long Single Hem

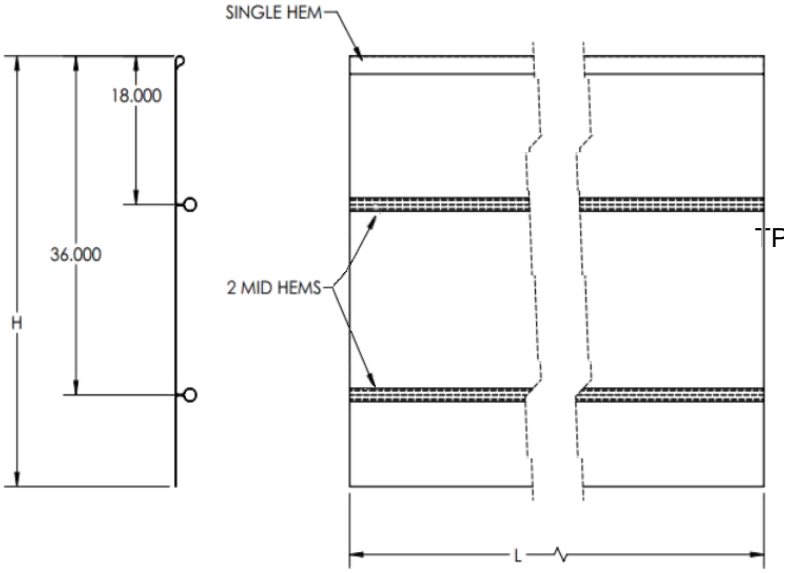

816-100Z3-YYY-3-1836

100**Z**4: Black/White Poly-Plus 0.009" Thick
(5.8oz/SQ-YD)

100**6**4: H = 4' 9"
100**7**4: H = 5' 9"
100**8**4: H = 6' 9"
100**9**4: H = 7' 9"

YYY: L =Length in Feet
(if "YYY" is 250 then L-250'

Example: 816-10074-250-3-1836
5' 9" Tall Black/White Curtain 250' Long
Single Hem & 2 Mid Hems @ 18" & 36"

Curtain Components

CATALOG NUMBER	ITEM DESCRIPTION	SHIP WEIGHT LBS.	SHIP WEIGHT KGS.	LIST PRICE
816001-1000	Cord, 1/8" x 1000', Polyester Needle Braid, White	3.9	1.8	
816002-0500	Cord, 1/8" x 500', Polyester Diamond Braid, White	2.8	1.3	
816003-1000	Cord, 3/16" x 1000', Polyester Diamond Braid, White	12.5	5.7	
816004-0500	Cord, 3/16" x 500', Polyester Diamond Braid, White	7.0	3.2	
816005	Screw Hook, .225" x 3-1/2" 1/2" Eye, Zinc Plated	0.1	0.0	
816006	Hook, Rope & Pulley	0.1	0.1	
816007	Tool, Sta-Kon Crimping 1/8" & 3/16"	1.3	0.6	
816008	Sta-Kon, 1/8", Regular	0.0	0.0	
816009	Sta-Kon, 1/8", Open, ZP (Best for Repairs)	0.0	0.0	
816010	Sta-Kon, 3/16", Regular	0.0	0.0	
816011	Bracket, Winch Mounting	2.6	1.2	
816012	Pulley, 7/8", Nylon, Swivel Galv Housing	0.0	0.0	
816013	Pulley, 2-1/2", Steel Sheave Galv Straps	0.5	0.2	
816014	Pulley, 3-1/2", Cast Iron Sheave Galv Straps W/Bolt	1.3	0.6	
816015	Nut, Hex, 3/8", ZP	0.0	0.0	
816016	Screw,Self-Drill, #10 x 1" W/ Neoprene Washer	0.0	0.0	
816017	Bolt,Lag,3/8x3",ZP	0.1	0.0	
816018	Washer, Flat, 3/8"	0.0	0.0	
816019	Bolt,Hex Head, 5/16-18 x 1",ZP Full Thread	0.0	0.0	
816020	Bolt,Hex Head, 3/8-16x1-1/2",ZP	0.1	0.0	
816021	Clamp, For 1/8" Cable, Galv	0.0	0.0	
816022	Clamp, For 1/8" Cable, SS	0.0	0.0	
816023	Clamp, For 3/16" Cable, Galv	0.1	0.0	
816024	Clamp, For 3/16" Cable, SS	0.1	0.0	
816025	Conduit, .706" (1/2") x 10', Swaged, Galv	2.5	1.1	
816026-0250	Cable, 1/8" x 250', 7x7, Galv	10.0	4.5	
816026-0500	Cable, 1/8" x 500', 7x7, Galv	18.0	8.2	
816026-1000	Cable, 1/8" x 1000', 7x7, Galv	35.0	15.9	
816026-2500	Cable, 1/8" x 2500', 7x7, Galv	82.0	37.3	
816026-5000	Cable, 1/8" x 5000', 7x7, Galv	150.0	68.2	
816027-0500	Cable, 1/8" x 500', 7x7, SS	19.0	8.6	
816027-1000	Cable, 1/8" x 1000', 7x7, SS	32.0	14.5	
816027-2500	Cable, 1/8" x 2500', 7x7, SS	70.0	31.8	
816028-0500	Cable, 3/16" x 500', 7x7, Galv	37.0	16.8	
816028-1000	Cable, 3/16" x 1000', 7x7,Galv	68.0	30.9	
816028-2500	Cable, 3/16" x 2500', 7x7,Galv	163.0	74.1	
816029-0500	Cable, 3/16" x 500', 7x19, SS	33.0	15.0	
816029-1000	TPI Inlet Exclusion Panel (use with 810214) (Can not be used with 8102	64.0	29.1	
816029-2500	Cable, 3/16" x 2500', 7x19, SS	166.0	75.5	
816030	Winch, 1200Lb, 4.1:1, 9.5" Handle Windlift	6.7	3.1	
816031	Winch, 1400Lb, 4.1:1, 9.5" Handle Windlift	6.7	3.1	
816032	Nail, Curtain, 1-1/4" Long Plastic Cap, Box Of 2000	10.0	4.5	
816033	Staple, Fence, 1-1/2", Per Lb	1.0	0.5	
816034	Turnbuckle, 5/16" x 6-1/4", Hook and Eye	0.2	0.1	

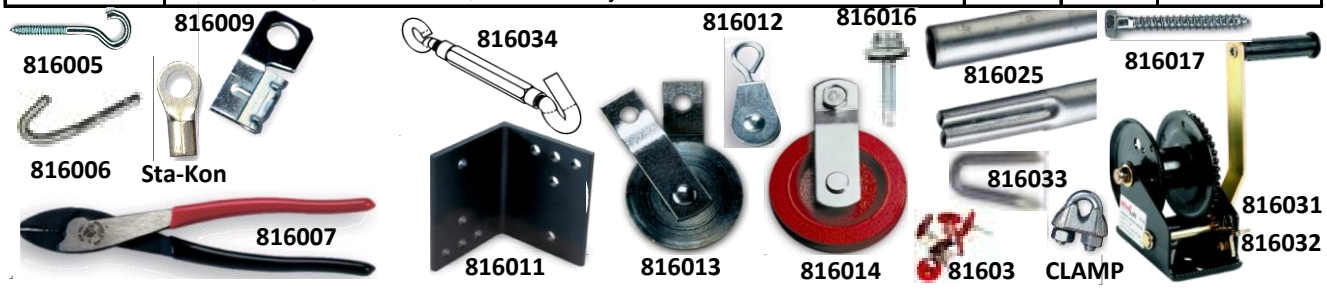

CEILING MATERIAL

Ordering Instructions

Step 1: Determine width of ceiling in feet. Divide by 12 and round up. That is how many rolls of Tri-Ply are needed.
Step 2: Determine length of building. Order the next longest Tri-Ply length. (Thicker Tri-Ply can hold more insulation without sagging.)
Step 3: Take your length (in feet) X width (in feet) to get your square footage divide by13,000 ft^2 and round up to get number of boxes of staples needed.
Step 4: Take the number of rolls of tri-ply minus 1 to get the number of seams that will be on the ceiling. Multiply that by the length of the house to get total number of feet of seams. Divide that by 165 to get number of rolls of tape. It is good to get 1 to 2 extra rolls of tape.
Step 5: Strapping is recommended to be spaced 6” apart if holding R18 insulation or more, 8” apart if holding less. Take the width of the house in feet and multiply by 2 to get number of rows of strapping if spacing 6” apart and multiply by 1.5 to get number of rows if spacing 8” apart. Take number of rows X length of building in feet and divide by 12,000 to get number of rolls of strapping needed (round up).
Step 6: Multiply the number of rolls of strapping needed by 12, then add the number of rows of strapping which was calculated in step 5 to that number, then add 50 as spares to determine how many strapping seals are needed.

Ceiling Material - Woven Polyethylene

CATALOG #	ITEM DESCRIPTION	SHIP WEIGHT LBS.	SHIP WEIGHT KG.	LIST PRICE
818000-405	TRI-PLY, 12' 6" X 405' X .006" - Black/White Woven	142.00	64.41	
818000-505	TRI-PLY, 12' 6" X 505' X .006" - Black/White Woven	177.00	80.29	
818000-605	TRI-PLY, 12' 6" X 605' X .006" - Black/White Woven	212.00	96.16	

Accessories

818006	Tape, White, 4" X 165', Woven	1.60	0.73	
818007	Tape, Black, 4" X 165', Woven	1.60	0.73	
818008	Strapping, Polyester, Green, 1/2" x 12,000' x .015"	55.00	24.95	
818009	Staple, Galv., 1" Crown, 1" Leg - (Box of 10,000)	23.00	10.43	
818010	Stapler, For 1" Wide Crown x 1-1/4" Leg Staples	5.00	2.27	
818011	Heavy Duty Strapping Tensioner	6.00	2.72	
818012	Strapping Seal, for 1/2" Strap (Individual)	0.01	0.00	
818013	Strapping Sealer for 1/2" Strap Seals, Heavy Duty	3.00	1.36	

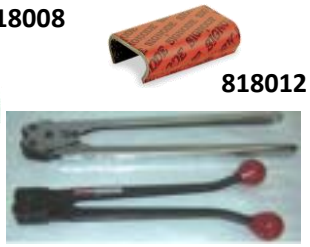

This Page was Intentionally Left Blank

SECTION 30
INLET ACTUATORS & CURTAIN MACHINES

IN THIS CATALOG SECTION

PAGE NUMBER	CONTENTS
30-02	Selecting the Correct Curtain Machine/Inlet Actuator
30-03	Selection Chart - ATLAS Ball & ACME Curtain Machines
30-04	ATLAS - Ball Screw Curtain Machines (WEATHER RESISTANT) 1A Control Machines compatable with EDGE house controllers
30-05	ATLAS - Acme Screw Curtain Machines (WEATHER RESISTANT)
30-06	Curtain Machine Options
30-07	Selection Chart - SafeTRAC Gen III ACME Screw Curtain Machines
30-08	SafeTRAC - 220v Acme Screw Curtain Machines (INDOOR ONLY)
30-09	SafeTRAC - 110v Acme Screw Curtain Machines (INDOOR ONLY)
30-10	Linear Actuators - Vent, Chimney, Inlet Actuators Selection Chart - Linear Actuators
30-11 thru 03-12	Curtain Machine Winching Examples

INLET ACTUATORS & CURTAIN MACHINES

SELECTING THE CORRECT CURTAIN MACHINE/INLET ACTUATOR

CURTAIN MACHINES

Ball Screw: The ATLAS ball screw based machine is a high quality machine using a ball screw drive for efficient and quiet operation. With regular maintenance, the ball screw will give a long life in any application.

ACME Screw: The ATLAS ACME screw based machines are economical machines that will give a long life with minimal maintenance.

SIZING YOUR MACHINE

Use the table on pages 30-03 & 30-06 to compare the sizes and capacities of the different machines.
(1) Select the category of machine that meets your requirements from above.
(2) The table has three columns for Travel Distance. Under the Pulley Ratio that matches your requirements, find the travel distance that you need.
(3) The column to the left of the travel distance is the travel per minute column. Select the travel per minute that you will need.

IMPORTANT NOTES

For 1:1 ratio - speed remains 1:1 - capacity remains 1:1 - total travel remains 1:1.
For 1:2 ratio - speed increases 2x - capacity decreases 50% - total travel increases 2x.
For 2:1 ratio - speed decrease 50% - capacity remains 1:1 - total travel decreases 50%.

Toll-free: 1-800-99VALCO
Phone: (+1) 419-678-8731
Fax: (+1) 419-678-2200

ATLAS™
CURTAIN MACHINES

SELECTING THE CORRECT ATLAS CURTAIN MACHINE

CURTAIN MACHINE SELECTION TABLE						Speed Increases 200% Capacity Decreases 50% Total Travel Increases 200%				Speed Decreases 50% Capacity Remains 100% Total Travel Decreases 50%			
		PULLEY RATIO 1:1				PULLEY RATIO 1:2				PULLEY RATIO 2:1			
TYPE	LENGTH	TRAVEL IN/MIN * 60 Hz	TRAVEL IN/MIN * 50 Hz	TRAVEL IN	RATED CAPACITY LBS.	TRAVEL IN/MIN * 60 Hz	TRAVEL IN/MIN * 50 Hz	TRAVEL IN	RATED CAPACITY LBS.	TRAVEL IN/MIN * 60 Hz	TRAVEL IN/MIN * 50 Hz	TRAVEL IN	RATED CAPACITY LBS.
ATLAS - BALL SCREW SERIES	24	6.0	5.0	22	4000	12.0	10.0	44	2000	3.0	2.5	11	4000
	36	6.0	5.0	34	4000	12.0	10.0	68	2000	3.0	2.5	17	4000
	48	6.0	5.0	46	4000	12.0	10.0	92	2000	3.0	2.5	23	4000
	72	6.0	5.0	70	4000	12.0	10.0	140	2000	3.0	2.5	35	4000
ATLAS - ACME SCREW SERIES (220V)	24	4.8	4.0	22	4000	9.6	8.0	44	2000	2.4	2.0	11	4000
	36	4.8	4.0	34	4000	9.6	8.0	68	2000	2.4	2.0	17	4000
	48	4.8	4.0	46	4000	9.6	8.0	92	2000	2.4	2.0	23	4000
	72	4.8	4.0	70	4000	9.6	8.0	140	2000	2.4	2.0	35	4000
ATLAS - ACME SCREW SERIES (110V)	24	5.0	N/A	22	4000	10.0	N/A	44	2000	2.5	N/A	11	4000
	36	5.0	N/A	34	4000	10.0	N/A	68	2000	2.5	N/A	17	4000
	48	5.0	N/A	46	4000	10.0	N/A	92	2000	2.5	N/A	23	4000
	72	5.0	N/A	70	4000	10.0	N/A	140	2000	2.5	N/A	35	4000

* Travel speeds are calculated based on motor and reducer nameplate ratings at 50/60Hz; travel speeds may vary by up to +20% (travel speeds for 1:2 and 2:1 pulley ratios are based on the calculated speeds of the 1:1 pulley ratio)

ATLAS™

WEATHER RESISTANT
BALL SCREW CURTAIN MACHINES

NOTES:
1. All ATLAS Ball Screw Curtain Machines are standard 220V, 50/60Hz, 1 Phase ONLY.
2. All machines standard with Auto/Manual and Open/Close local control switches.
3. Sprocket & chain drive available.
4. WEATHER RESISTANT - ATLAS Curtain Machines use weather resistant limit switches and include a circuit board that is in a weather resistant enclosure.
5. **Optional Clutch** available to allow curtain to slowly drop when power is lost and return to position when power is restored.

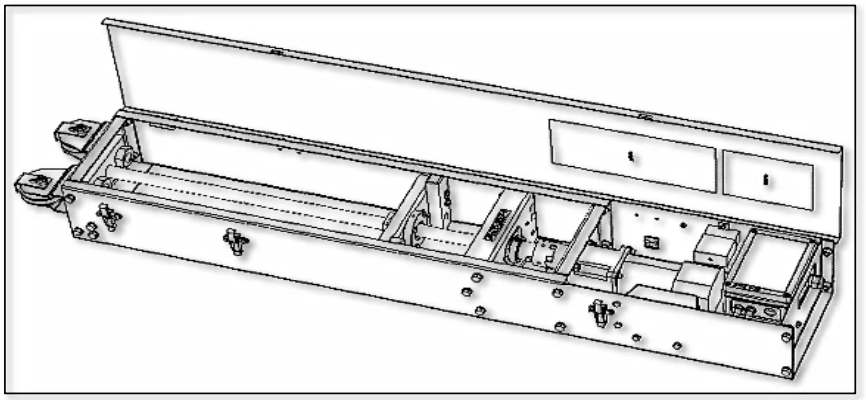

BALL SCREW CURTAIN MACHINES

CATALOG #	ITEM DESCRIPTION	SHIP WEIGHT LBS.	SHIP WEIGHT KG.	LIST PRICE
970508-24	Curtain Machine 24", Ball Screw, 50/60Hz, 5/6 IN/MIN, 25/30 RPM	79.7	36.1	
970512-24	With Optional Sprocket & Chain Drive	79.9	36.2	
970516-24	Curtain Machine 24", Ball Screw w/ **Clutch**, 50/60Hz, 5/6IN/MIN, 25/30 RPM	83.9	38.1	
970520-24	With Optional Sprocket & Chain Drive	83.8	38.0	
970508-36	Curtain Machine 36", Ball Screw, 50/60Hz, 5/6 IN/MIN, 25/30 RPM	81.4	36.9	
970512-36	With Optional Sprocket & Chain Drive	81.6	37.0	
970516-36	Curtain Machine 36", Ball Screw w/ **Clutch**, 50/60Hz, 5/6 IN/MIN, 25/30 RPM	107.0	48.5	
970520-36	With Optional Sprocket & Chain Drive	85.2	38.7	
970508-48	Curtain Machine 48", Ball Screw, 50/60Hz, 5/6 IN/MIN, 25/30 RPM	87.6	39.7	
970512-48	With Optional Sprocket & Chain Drive	87.2	39.6	
970516-48	Curtain Machine 48", Ball Screw w/ **Clutch**, 50/60Hz, 5/6 IN/MIN, 25/30 RPM	91.8	41.7	
970520-48	With Optional Sprocket & Chain Drive	91.8	41.6	
970508-72	Curtain Machine 72", Ball Screw, 50/60Hz, 5/6 IN/MIN, 25/30 RPM	108.3	49.1	
970512-72	With Optional Sprocket & Chain Drive	108.1	49.0	
970516-72	Curtain Machine 72", Ball Screw w/ **Clutch**, 50/60Hz, 5/6 IN/MIN, , 25/30 RPM	142.0	64.4	
970520-72	With Optional Sprocket & Chain Drive	112.5	51.0	

BALL SCREW CURTAIN MACHINES

970516-24-1A	Curtain Machine 24", Ball Screw w/ **Clutch**, 50/60Hz, 5/6IN/MIN, 25/30 RPM 1A Control Machines compatable with EDGE house controllers	87.2	39.6	
970520-24-1A	With Optional Sprocket & Chain Drive	87.2	39.6	
970516-36-1A	Curtain Machine 36", Ball Screw w/ **Clutch**, 50/60Hz, 5/6IN/MIN, 25/30 RPM 1A Control Machines compatable with EDGE house controllers	97.9	44.4	
970520-36-1A	With Optional Sprocket & Chain Drive	98.1	44.5	

Toll-free: 1-800-99VALCO
Phone: (+1) 419-678-8731
Fax: (+1) 419-678-2200

ATLAS™

WEATHER RESISTANT
ACME SCREW CURTAIN MACHINES

NOTES:
1. All ATLAS Acme Screw Curtain Machines are standard 110V 60Hz or 220V, 50/60Hz, 1 Phase ONLY.
2. All machines standard with Auto/Manual and Open/Close local control switches.
3. Sprocket & chain drive available.
4. WEATHER RESISTANT - ATLAS Curtain Machines use weather resistant limit switches and include a circuit board that is in a weather resistant enclosure.

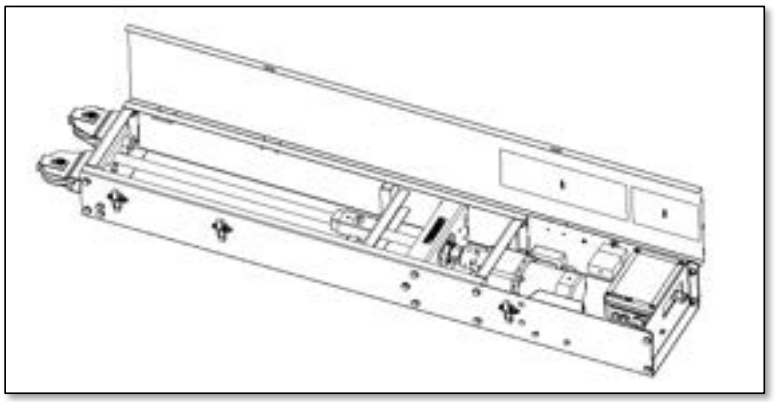

ACME SCREW CURTAIN MACHINES (220V)

CATALOG #	ITEM DESCRIPTION	SHIP WEIGHT LBS.	SHIP WEIGHT KG.	LIST PRICE
970500-24	Curtain Machine 24", Acme Screw, 50/60Hz, 4/4.8 IN/MIN, 25/30 RPM	86.3	39.2	
970504-24	With Optional Sprocket & Chain Drive	86.2	39.1	
970500-36	Curtain Machine 36", Acme Screw, 50/60Hz, 4/4.8 IN/MIN, 25/30 RPM	97.0	44.0	
970504-36	With Optional Sprocket & Chain Drive	96.9	44.0	
970500-48	Curtain Machine 48", Acme Screw, 50/60Hz, 4/4.8 IN/MIN, 25/30 RPM	105.5	47.9	
970504-48	With Optional Sprocket & Chain Drive	105.5	47.8	
970500-72	Curtain Machine 72", Acme Screw, 50/60Hz, 4/4.8 IN/MIN, 25/30 RPM	130.9	59.4	
970504-72	With Optional Sprocket & Chain Drive	130.8	59.3	

ACME SCREW CURTAIN MACHINES (110V)

CATALOG #	ITEM DESCRIPTION	SHIP WEIGHT LBS.	SHIP WEIGHT KG.	LIST PRICE
970501-24	Curtain Machine 24", Acme Screw, 60Hz, 5 IN/MIN, 30 RPM	85.9	39.0	
970505-24	With Optional Sprocket & Chain Drive	85.8	38.9	
970501-36	Curtain Machine 36", Acme Screw, 60Hz, 5 IN/MIN, 30 RPM	96.6	43.8	
970505-36	With Optional Sprocket & Chain Drive	96.5	43.8	
970501-48	Curtain Machine 48", Acme Screw, 60Hz, 5 IN/MIN, 30 RPM	105.1	47.7	
970505-48	With Optional Sprocket & Chain Drive	105.0	47.6	
970501-72	Curtain Machine 72", Acme Screw, 60Hz, 5 IN/MIN, 30 RPM	130.9	59.4	
970505-72	With Optional Sprocket & Chain Drive	130.3	59.1	

Toll-free: 1-800-99VALCO
Phone: (+1) 419-678-8731
Fax: (+1) 419-678-2200

Curtain Machine Options

OPTIONAL POTENTIOMETER KITS

CATALOG #	ITEM DESCRIPTION	SHIP WEIGHT LBS.	SHIP WEIGHT KG.	LIST PRICE
970370	Potentiometer Kit - Spring Loaded for **Ball Screw** Curtain Machines	1.0	0.5	
970371	Potentiometer Kit - Spring Loaded for **ACME Screw** Curtain Machines	1.0	0.3	
970156	Potentiometer Only, no Bracket or Gear for ACME and Ball Screw Curtain Machines 24" - 72"	0.0	0.0	

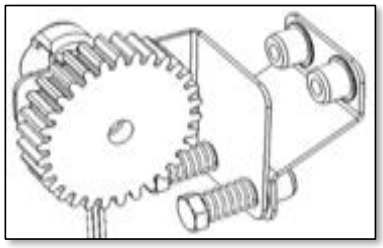

970370

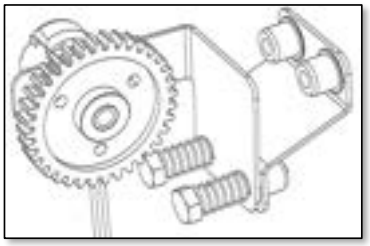

970371 **#REF!**

AUXILLARY LIMIT SWITCH

CATALOG #	ITEM DESCRIPTION	SHIP WEIGHT LBS.	SHIP WEIGHT KG.	LIST PRICE
970200	Whisker Switch, Normally Closed, 240V @ 15 amps	0.2	0.1	

OPTIONAL WEATHER GUARD

CATALOG #	ITEM DESCRIPTION	SHIP WEIGHT LBS.	SHIP WEIGHT KG.	LIST PRICE
970196	Weather Guard Minimize the amount of moisture that can enter the top of the machine	5.0	2.3	

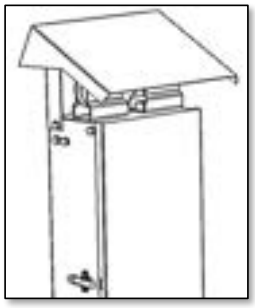

970196

970547 & 970548

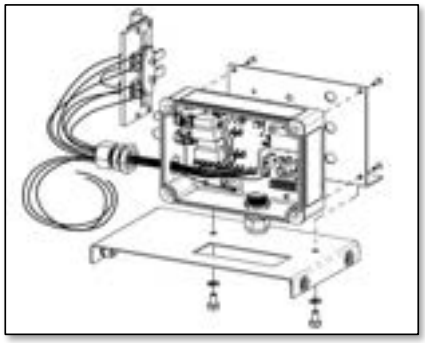

GEN II BOARD CONVERSION KIT TO *ATLAS*

CATALOG #	ITEM DESCRIPTION	SHIP WEIGHT LBS.	SHIP WEIGHT KG.	LIST PRICE
970547	Convert a 220V ACME Gen II board & switch to a single board ATLAS and switch	4.4	2.0	
970548	Convert a 110V ACME Gen II board & switch to a single board ATLAS and switch	4.4	2.0	
970545	Convert a 220V Ball Screw Gen II board & switch to a single board ATLAS and switch	4.4	2.0	

OPTIONAL *SAFETRAC* LOCAL CONTROL SWITCH KIT

CATALOG #	ITEM DESCRIPTION	SHIP WEIGHT LBS.	SHIP WEIGHT KG.	LIST PRICE
970667	Local Control Switch Kit for ACME Screw Curtain Machines, GEN III INDOOR ONLY	0.3	0.1	

Toll-free: 1-800-99VALCO
Phone: (+1) 419-678-8731
Fax: (+1) 419-678-2200

SAFETRAC GENERATION III
INDOOR CURTAIN MACHINES

SELECTING THE CORRECT SAFETRAC CURTAIN MACHINE

CURTAIN MACHINE SELECTION TABLE						Speed Increases 200% Capacity Decreases 50% Total Travel Increases 200%				Speed Decreases 50% Capacity Remains 100% Total Travel Decreases 50%			
		PULLEY RATIO 1:1				PULLEY RATIO 1:2				PULLEY RATIO 2:1			
TYPE	0	TRAVEL IN/MIN * 60 Hz	TRAVEL IN/MIN * 50 Hz	TRAVEL IN	RATED CAPACITY LBS.	TRAVEL IN/MIN * 60 Hz	TRAVEL IN/MIN * 50 Hz	TRAVEL IN	RATED CAPACITY LBS.	TRAVEL IN/MIN * 60 Hz	TRAVEL IN/MIN * 50 Hz	TRAVEL IN	RATED CAPACITY LBS.
SAFETRAC GEN3 - ACME SCREW SERIES (220V)	24	4.8	4.0	22	4000	9.6	8.0	44	2000	2.4	2.0	11	4000
	36	4.8	4.0	34	4000	9.6	8.0	68	2000	2.4	2.0	17	4000
	48	4.8	4.0	46	4000	9.6	8.0	92	2000	2.4	2.0	23	4000
	72	4.8	4.0	70	4000	9.6	8.0	140	2000	2.4	2.0	35	4000
SAFETRAC GEN3 - ACME SCREW SERIES (110V)	24	5.0	N/A	22	4000	10.0	N/A	44	2000	2.5	N/A	11	4000
	36	5.0	N/A	34	4000	10.0	N/A	68	2000	2.5	N/A	17	4000
	48	5.0	N/A	46	4000	10.0	N/A	92	2000	2.5	N/A	23	4000
	72	5.0	N/A	70	4000	10.0	N/A	140	2000	2.5	N/A	35	4000
SAFETRAC GEN3 - ACME SCREW SERIES (110V)	24	10.0	N/A	22	2000	20.0	N/A	44	1000	5.0	N/A	11	2000
	36	10.0	N/A	34	2000	20.0	N/A	68	1000	5.0	N/A	17	2000
	48	10.0	N/A	46	2000	20.0	N/A	92	1000	5.0	N/A	23	2000
	72	10.0	N/A	70	2000	20.0	N/A	140	1000	5.0	N/A	35	2000

* Travel speeds are calculated based on motor and reducer nameplate ratings at 50/60Hz; travel speeds may vary by up to +20% (travel speeds for 1:2 and 2:1 pulley ratios are based on the calculated speeds of the 1:1 pulley ratio)

SAFETRAC GEN III - INDOOR ACME CURTAIN MACHINES - 220V

NOTES:
1. All GEN III SAFETRAC Acme Screw Curtain Machines are standard 220V, 50/60Hz, 1 Phase ONLY.
2. Auto/Manual, Open/Close, and Override local control switches designated by the part number followed by "-SW".
3. Sprocket & chain drive available.
4. INDOOR ONLY - GEN III SAFETRAC Curtain Machines use standard limit switches and include a terminal strip, the units are NOT weather resistant (NOT INTENDED FOR SWINE APPLICATIONS).

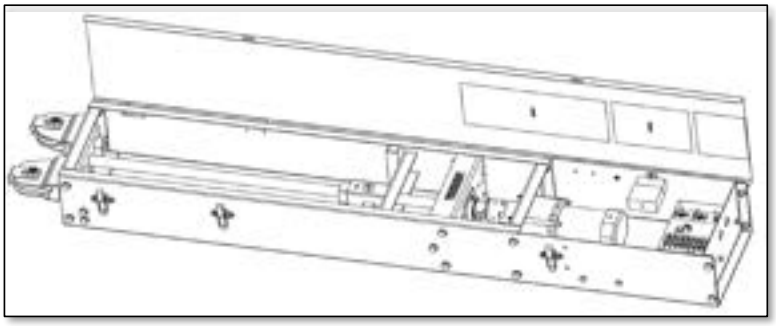

ACME SCREW CURTAIN MACHINES (220V)

CATALOG #	ITEM DESCRIPTION	SHIP WEIGHT LBS.	SHIP WEIGHT KG.	LIST PRICE
970532-24	Curtain Machine 24", Acme Screw, 50/60Hz, 4/4.8 IN/MIN, 25/30 RPM	83.0	37.7	
970532-24-SW	Curtain Machine 24", Acme Screw, 50/60Hz, 4/4.8 IN/MIN, 25/30 RPM with Local Switch	83.0	37.7	
970536-24	With Optional Sprocket & Chain Drive	83.0	37.6	
970536-24-SW	With Optional Sprocket & Chain Drive with Local Switch	83.0	37.6	
970532-36	Curtain Machine 36", Acme Screw, 50/60Hz, 4/4.8 IN/MIN, 25/30 RPM	93.4	42.4	
970532-36-SW	Curtain Machine 36", Acme Screw, 50/60Hz, 4/4.8 IN/MIN, 25/30 RPM with Local Switch	93.4	42.4	
970536-36	With Optional Sprocket & Chain Drive	93.3	42.3	
970536-36-SW	With Optional Sprocket & Chain Drive with Local Switch	93.3	42.3	
970532-48	Curtain Machine 48", Acme Screw, 50/60Hz, 4/4.8 IN/MIN, 25/30 RPM	104.0	47.2	
970532-48-SW	Curtain Machine 48", Acme Screw, 50/60Hz, 4/4.8 IN/MIN, 25/30 RPM with Local Switch	104.0	47.2	
970536-48	With Optional Sprocket & Chain Drive	103.9	47.1	
970536-48-SW	With Optional Sprocket & Chain Drive with Local Switch	103.9	47.1	
970532-72	Curtain Machine 72", Acme Screw, 50/60Hz, 4/4.8 IN/MIN, 25/30 RPM	125.3	56.8	
970532-72-SW	Curtain Machine 72", Acme Screw, 50/60Hz, 4/4.8 IN/MIN, 25/30 RPM with Local Switch	125.3	56.8	
970536-72	With Optional Sprocket & Chain Drive	125.2	56.8	
970536-72-SW	With Optional Sprocket & Chain Drive with Local Switch	125.2	56.8	

SAFETRAC GEN III - INDOOR ACME CURTAIN MACHINES - 110V

NOTES:
1. All GEN III SAFETRAC Acme Screw Curtain Machines are standard 110V 60Hz , 1 Phase ONLY.
2. Auto/Manual, Open/Close, and Override local control switches designated by the part number followed by "-SW".
3. Sprocket & chain drive available.
4. INDOOR ONLY - GEN III SAFETRAC Curtain Machines use standard limit switches and include a terminal strip, the units are NOT weather resistant (NOT INTENDED FOR SWINE APPLICATIONS).

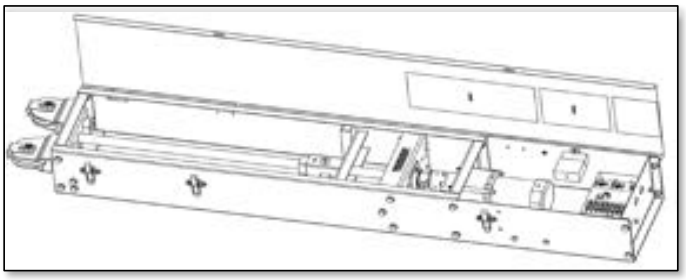

ACME SCREW CURTAIN MACHINES (110V)

5 inches / minute - 4000 pounds maximum weight

CATALOG #	ITEM DESCRIPTION	SHIP WEIGHT LBS.	SHIP WEIGHT KG.	
970540-24	Curtain Machine 24", Acme Screw, 60Hz, 5 IN/MIN, 30 RPM	83.0	37.7	
970540-24-SW	Curtain Machine 24", Acme Screw, 60Hz, 5 IN/MIN, 30 RPM with Local Switch	83.0	37.7	
970544-24	With Optional Sprocket & Chain Drive	83.0	37.6	
970544-24-SW	With Optional Sprocket & Chain Drive with Local Switch	83.0	37.6	
970540-36	Curtain Machine 36", Acme Screw, 60Hz, 5 IN/MIN, 30 RPM	93.4	42.4	
970540-36-SW	Curtain Machine 36", Acme Screw, 60Hz, 5 IN/MIN, 30 RPM with Local Switch	93.4	42.4	
970544-36	With Optional Sprocket & Chain Drive	93.3	42.3	
970544-36-SW	With Optional Sprocket & Chain Drive with Local Switch	100.0	45.4	
970540-48	Curtain Machine 48", Acme Screw, 60Hz, 5 IN/MIN, 30 RPM	104.0	47.2	
970540-48-SW	Curtain Machine 48", Acme Screw, 60Hz, 5 IN/MIN, 30 RPM with Local Switch	104.0	47.2	
970544-48	With Optional Sprocket & Chain Drive	103.9	47.1	
970544-48-SW	With Optional Sprocket & Chain Drive with Local Switch	103.9	47.1	
970540-72	Curtain Machine 72", Acme Screw, 60Hz, 5 IN/MIN, 30 RPM	125.3	56.8	
970540-72-SW	Curtain Machine 72", Acme Screw, 60Hz, 5 IN/MIN, 30 RPM with Local Switch	125.3	56.8	
970544-72	With Optional Sprocket & Chain Drive	125.2	56.8	
970544-72-SW	With Optional Sprocket & Chain Drive with Local Switch	125.2	56.8	

10 inches / minute - 2000 pounds maximum weight

CATALOG #	ITEM DESCRIPTION	SHIP WEIGHT LBS.	SHIP WEIGHT KG.	LIST PRICE
970561-24	Curtain Machine 24", Acme Screw, 60Hz, 10 IN/MIN, 60 RPM	83.0	37.7	
970561-24-SW	Curtain Machine 24", Acme Screw, 60Hz, 10 IN/MIN, 60 RPM with Local Switch	83.0	37.7	
970562-24	With Optional Sprocket & Chain Drive	83.0	37.6	
970562-24-SW	With Optional Sprocket & Chain Drive with Local Switch	83.0	37.6	
970561-36	Curtain Machine 36", Acme Screw, 60Hz, 10 IN/MIN, 60 RPM	93.4	42.4	
970561-36-SW	Curtain Machine 36", Acme Screw, 60Hz, 10 IN/MIN, 60 RPM with Local Switch	93.4	42.4	
970562-36	With Optional Sprocket & Chain Drive	93.3	42.3	
970562-36-SW	With Optional Sprocket & Chain Drive with Local Switch	93.3	42.3	
970561-48	Curtain Machine 48", Acme Screw, 60Hz, 10 IN/MIN, 60 RPM	104.0	47.2	
970561-48-SW	Curtain Machine 48", Acme Screw, 60Hz, 10 IN/MIN, 60 RPM with Local Switch	104.0	47.2	
970562-48	With Optional Sprocket & Chain Drive	103.9	47.1	
970562-48-SW	With Optional Sprocket & Chain Drive with Local Switch	103.9	47.1	
970561-72	Curtain Machine 72", Acme Screw, 60Hz, 10 IN/MIN, 60 RPM	125.3	56.8	
970561-72-SW	Curtain Machine 72", Acme Screw, 60Hz, 10 IN/MIN, 60 RPM W/Switch	125.3	56.8	
970562-72	With Optional Sprocket & Chain Drive	125.2	56.8	
970562-72-SW	With Optional Sprocket & Chain Drive with Local Switch	125.2	56.8	

LINEAR ACTUATORS

VENT, CHIMNEY, INLET ACTUATORS

CATALOG #	ITEM DESCRIPTION	SHIP WEIGHT LBS.	SHIP WEIGHT KG.	LIST PRICE
C433	18" Vent Actuator 230VAC 1Ph 50/60Hz 800lb with potentiometer - 14"/min	21.0	9.5	

ACCESSORIES

CATALOG #	ITEM DESCRIPTION	SHIP WEIGHT LBS.	SHIP WEIGHT KG.	LIST PRICE
BE7019	Motor Repair Kit (Actuator) for BE7110	0.0	0.0	
BE7017	Capacitor for BE7110 Motor	0.0	0.0	
ZC427	Potentiometer for C433	0.5	0.2	
750014	Counterweight	10.2	4.6	

LINEAR ACTUATORS CHART

INLET ACTUATOR SELECTION TABLE						Speed Increases 200% Capacity Decreases 50% Total Travel Increases 200%			Speed Decreases 50% Capacity Remains 100% Total Travel Decreases 50%		
			PULLEY RATIO 1:1			PULLEY RATIO 1:2			PULLEY RATIO 2:1		
TYPE	CATALOG NUMBER	VAC 1PH	TRAVEL IN/MIN	TRAVEL IN	CAPACITY LBS.	TRAVEL IN/MIN	TRAVEL IN	CAPACITY LBS.	TRAVEL IN/MIN	TRAVEL IN	CAPACITY LBS.
INLET ACTUATOR	C433	230	14.0	17	800	28.0	34	400	7.00	9	800

CURTAIN MACHINE WINCHING

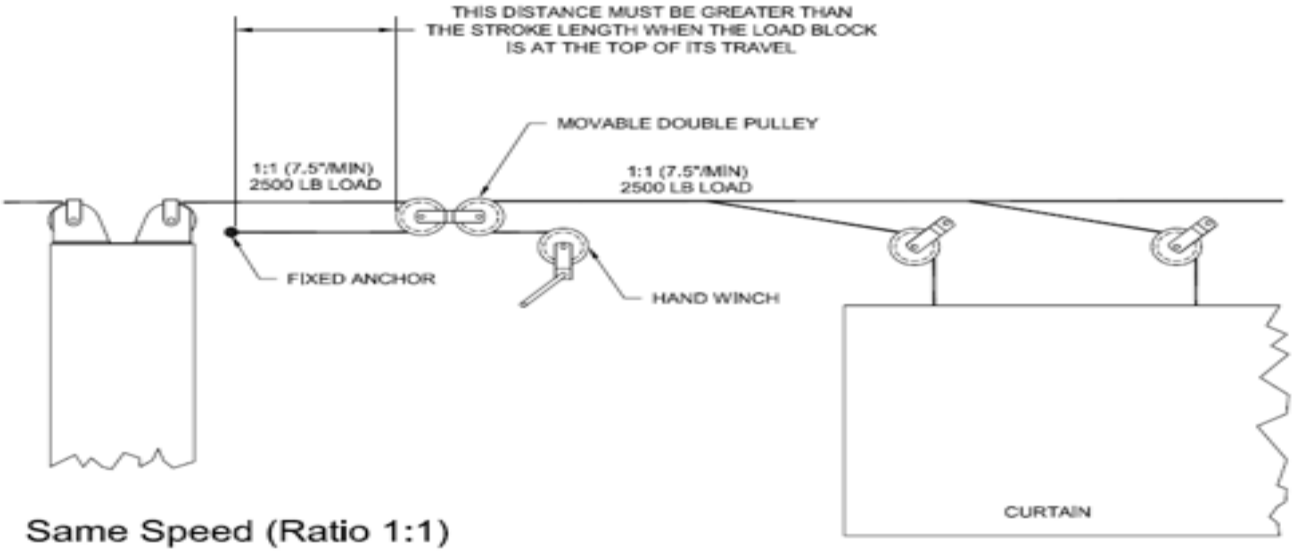

Same Speed (Ratio 1:1)

12 inches of cable movement at the machine equals 12 inches of cable movement at the curtain

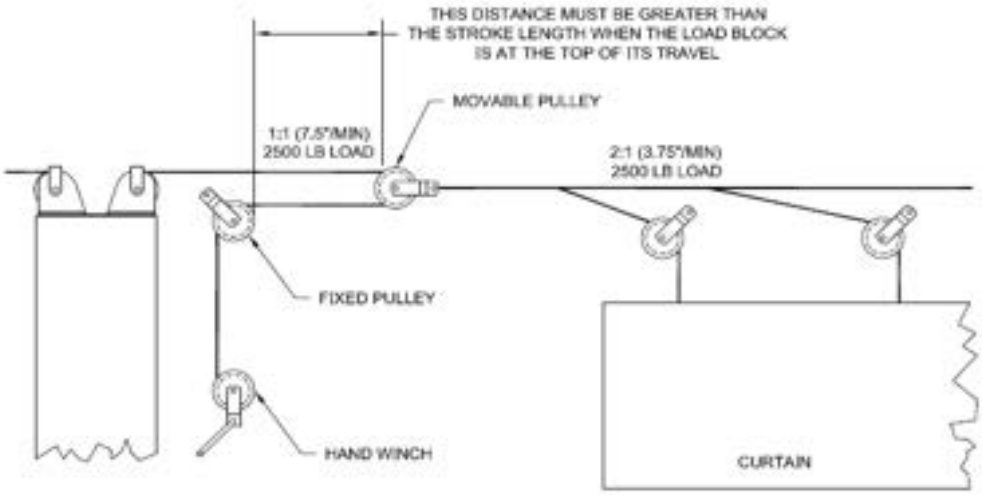

Speed Down (Ratio 2:1)

12 inches of cable movement at the machine equals 6 inches of cable movement at the curtain

CURTAIN MACHINE WINCHING

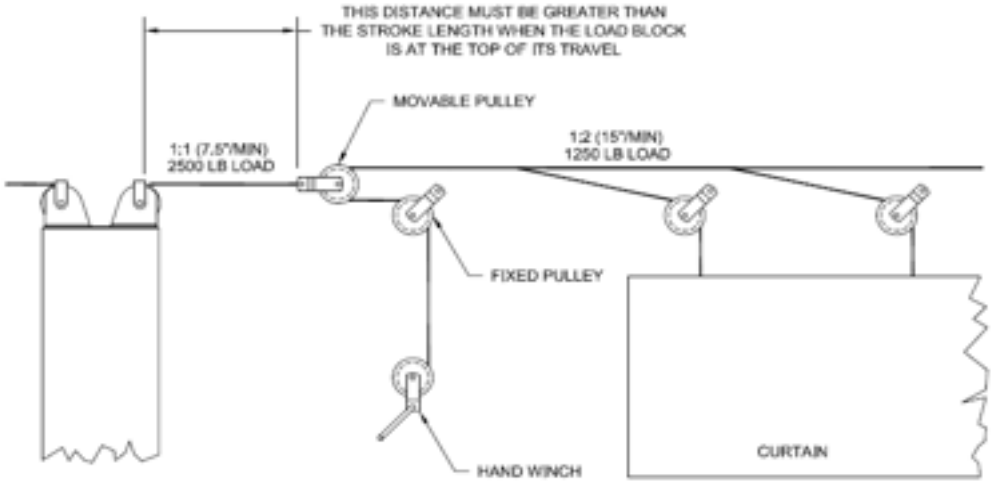

Speed Up (Ratio 1:2)

12 inches of cable movement at the machine equals 24 inches of cable movement at the curtain

For more winching accessories please see Section 19 of this catalogue

Toll-free: 1-800-99VALCO
Phone: (+1) 419-678-8731
Fax: (+1) 419-678-2200

SECTION 31
LIGHT TRAP

IN THIS CATALOG SECTION

PAGE NUMBER	CONTENTS
31-02	Light Trap 1" & 1.5" Air Flow Data
31-03	Nightair (Black Out) (Black Out) 1" - Framed Cartridge Pricing (18", 24" & 36" Width)
31-04	Nightair (Black Out) 1" - Framed Cartridge Pricing (48", 52" & 54" Width)
31-05	Nightair (Black Out) 1" - Framed Cartridge Pricing (60", 72", & 84" Width)
31-06	Eclipse (Brown Out) 1.5" - Framed Cartridge Pricing (48" Width)
31-07	Eclipse (Brown Out) 1.5" - Parts
31-08	Nightair (Black Out) 1" - Rod Cartridge Pricing (18", 24" & 36" Width)
31-09	Nightair (Black Out) 1" - Rod Cartridge Pricing (48", 52" & 54" Width)
31-10	Nightair (Black Out) 1" - Rod Cartridge Pricing (60", 72", & 84" Width)
31-11	Components for Nightair (Black Out) Trap
31-12	9" Deep Mounting Bracket Kits & Flush Mount Night Air Transitions

Toll-free: 1-800-99VALCO
Phone: (+1) 419-678-8731
Fax: (+1) 419-678-2200

LIGHT TRAP
Airflow Data

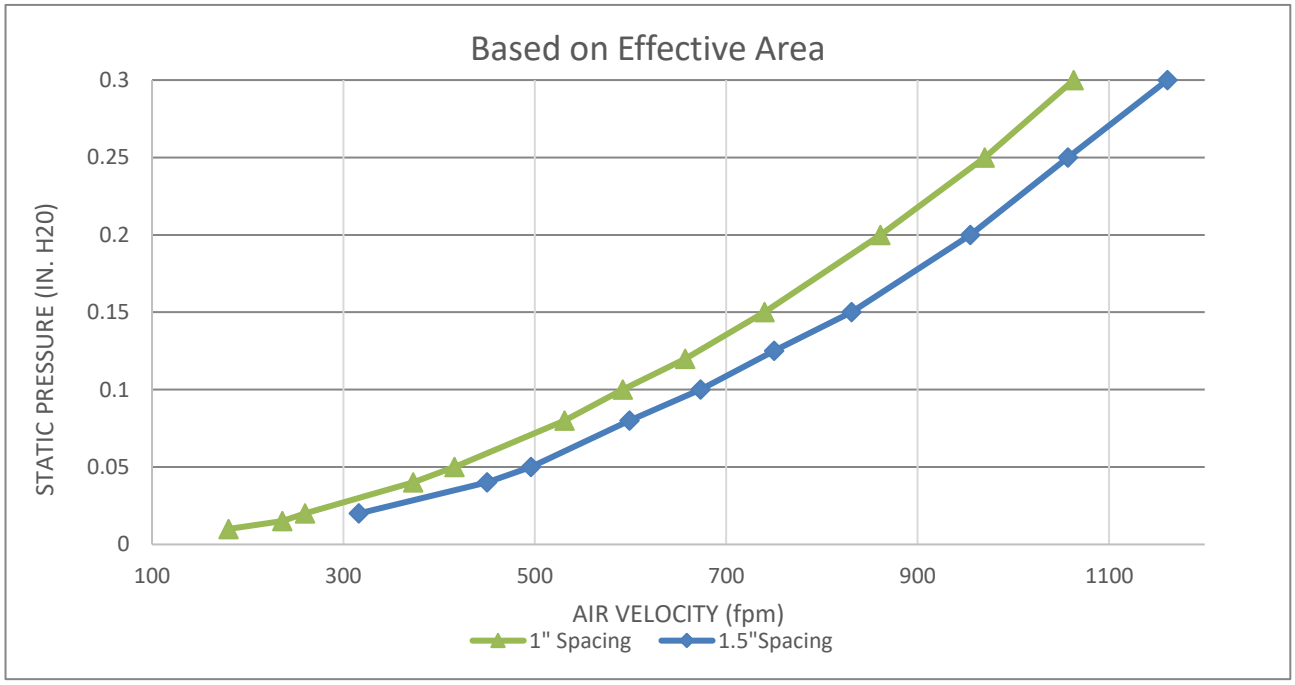

LIGHT REDUCTION FACTOR Outside/Inside		
1" Spacing	3,100,000:1	BESS # 04073
1.5" Spacing	2,000:1	BESS # 24095L

Toll-free: 1-800-99VALCO
Phone: (+1) 419-678-8731
Fax: (+1) 419-678-2200

Nightair (Black Out) - 1"

FRAMED CARTRIDGE

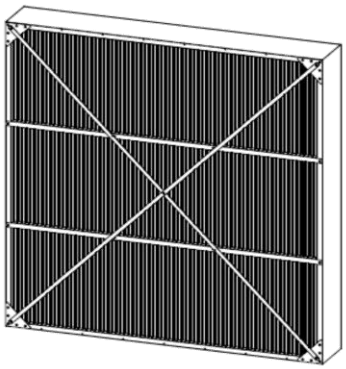

NIGHTAIR - FRAMED CARTRIDGE

ALL DIMENSIONS ARE +/- 1/8"

					ASSEMBLED FRAMED		UNASSEMBLED FRAMED	
WIDTH IN	HEIGHT IN	AREA FT²	SHIP WEIGHT		1" SPACING		1" SPACING	
			Lbs.	Kgs	PART NO.	LIST PRICE	PART NO.	LIST PRICE
18	18	2.25	8.2	3.7	NAK18B18F		NAK18B18FU	
18	24	3.00	19.6	8.9	NAK18B24F		NAK18B24FU	
18	36	4.50	26.6	12.1	NAK18B36F		NAK18B36FU	
18	48	6.00	33.5	15.2	NAK18B48F		NAK18B48FU	
18	52	6.50	35.7	16.2	NAK18B52F		NAK18B52FU	
18	54	6.75	36.1	16.4	NAK18B54F		NAK18B54FU	
18	60	7.50	43.0	19.5	NAK18B60F		NAK18B60FU	
18	72	9.00	50.2	22.8	NAK18B72F		NAK18B72FU	
18	84	10.50	58.4	26.5	NAK18B84F		NAK18B84FU	
24	18	3.00	9.3	4.2	NAK24B18F		NAK24B18FU	
24	24	4.00	24.3	11.0	NAK24B24F		NAK24B24FU	
24	36	6.00	33.4	15.1	NAK24B36F		NAK24B36FU	
24	48	8.00	42.2	19.1	NAK24B48F		NAK24B48FU	
24	52	8.67	44.4	20.1	NAK24B52F		NAK24B52FU	
24	54	9.00	44.8	20.3	NAK24B54F		NAK24B54FU	
24	60	10.00	53.7	24.4	NAK24B60F		NAK24B60FU	
24	72	12.00	62.7	28.4	NAK24B72F		NAK24B72FU	
24	84	14.00	62.7	28.4	NAK24B84F		NAK24B84FU	
36	18	4.50	11.5	5.2	NAK36B18F		NAK36B18FU	
36	24	6.00	33.8	15.3	NAK36B24F		NAK36B24FU	
36	36	9.00	46.9	21.3	NAK36B36F		NAK36B36FU	
36	48	12.00	47.1	21.4	NAK36B48F		NAK36B48FU	
36	52	13.00	63.5	28.8	NAK36B52F		NAK36B52FU	
36	54	13.50	64.0	29.0	NAK36B54F		NAK36B54FU	
36	60	15.00	77.3	35.1	NAK36B60F		NAK36B60FU	
36	72	18.00	90.2	40.9	NAK36B72F		NAK36B72FU	
36	84	21.00	105.0	47.6	NAK36B84F		NAK36B84FU	

SEE COMPONENTS ON PAGE 31-10

Toll-free: 1-800-99VALCO
Phone: (+1) 419-678-8731
Fax: (+1) 419-678-2200

Nightair (Black Out) - 1"

FRAMED CARTRIDGE

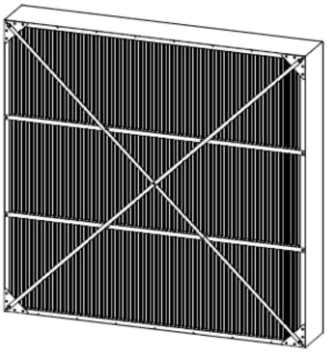

NIGHTAIR - FRAMED CARTRIDGE

ALL DIMENSIONS ARE +/- 1/8"

					ASSEMBLED FRAMED		UNASSEMBLED FRAMED	
WIDTH IN	HEIGHT IN	AREA FT²	SHIP WEIGHT		1" SPACING		1" SPACING	
			Lbs.	Kgs	PART NO.	LIST PRICE	PART NO.	LIST PRICE
48	18	6.00	13.8	6.3	NAK48B18F		NAK48B18FU	
48	24	8.00	43.2	19.6	NAK48B24F		NAK48B24FU	
48	36	12.00	62.3	28.3	NAK48B36F		NAK48B36FU	
48	48	16.00	102.5	46.5	NAK48B48F		NAK48B48FU	
48	52	17.33	79.5	36.1	NAK48B52F		NAK48B52FU	
48	54	18.00	80.0	36.3	NAK48B54F		NAK48B54FU	
48	60	20.00	100.0	45.4	NAK48B60F		NAK48B60FU	
48	72	24.00	171.3	77.7	NAK48B72F		NAK48B72FU	
48	84	28.00	129.7	58.8	NAK48B84F		NAK48B84FU	
52	18	6.50	16.8	7.6	NAK52B18F		NAK52B18FU	
52	24	8.67	48.7	22.1	NAK52B24F		NAK52B24FU	
52	36	13.00	69.6	31.6	NAK52B36F		NAK52B36FU	
52	48	17.33	87.1	39.5	NAK52B48F		NAK52B48FU	
52	52	18.78	92.3	41.9	NAK52B52F		NAK52B52FU	
52	54	19.50	88.4	40.1	NAK52B54F		NAK52B54FU	
52	60	21.67	107.5	48.8	NAK52B60F		NAK52B60FU	
52	72	26.00	125.1	56.7	NAK52B72F		NAK52B72FU	
52	84	30.33	145.6	66.0	NAK52B84F		NAK52B84FU	
54	18	6.75	17.3	7.8	NAK54B18F		NAK54B18FU	
54	24	9.00	50.4	22.9	NAK54B24F		NAK54B24FU	
54	36	13.50	72.0	32.7	NAK54B36F		NAK54B36FU	
54	48	18.00	90.1	40.9	NAK54B48F		NAK54B48FU	
54	52	19.50	90.9	41.2	NAK54B52F		NAK54B52FU	
54	54	20.25	91.3	41.4	NAK54B54F		NAK54B54FU	
54	60	22.50	111.0	50.3	NAK54B60F		NAK54B60FU	
54	72	27.00	129.0	58.5	NAK54B72F		NAK54B72FU	
54	84	31.50	150.0	68.0	NAK54B84F		NAK54B84FU	

SEE COMPONENTS ON PAGE 31-10

Toll-free: 1-800-99VALCO
Phone: (+1) 419-678-8731
Fax: (+1) 419-678-2200

Nightair (Black Out) - 1"

FRAMED CARTRIDGE

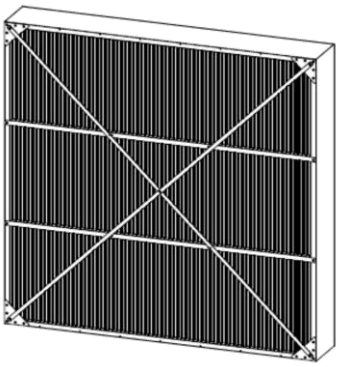

NIGHTAIR - FRAMED CARTRIDGE

ALL DIMENSIONS ARE +/- 1/8"

					ASSEMBLED FRAMED		UNASSEMBLED FRAMED	
WIDTH IN	HEIGHT IN	AREA FT²	SHIP WEIGHT		1" SPACING		1" SPACING	
			Lbs.	Kgs	PART NO.	LIST PRICE	PART NO.	LIST PRICE
60	18	7.50	18.6	8.4	NAK60B18F		NAK60B18FU	
60	24	10.00	55.3	25.1	NAK60B24F		NAK60B24FU	
60	36	15.00	79.2	35.9	NAK60B36F		NAK60B36FU	
60	48	20.00	98.4	44.6	NAK60B48F		NAK60B48FU	
60	52	21.67	100.0	45.4	NAK60B52F		NAK60B52FU	
60	54	22.50	100.0	45.4	NAK60B54F		NAK60B54FU	
60	60	25.00	122.2	55.4	NAK60B60F		NAK60B60FU	
60	72	30.00	142.3	64.5	NAK60B72F		NAK60B72FU	
60	84	35.00	165.7	75.2	NAK60B84F		NAK60B84FU	
72	18	9.00	20.2	9.2	NAK72B18F		NAK72B18FU	
72	24	12.00	64.1	29.1	NAK72B24F		NAK72B24FU	
72	36	18.00	92.3	41.9	NAK72B36F		NAK72B36FU	
72	48	24.00	115.8	52.5	NAK72B48F		NAK72B48FU	
72	52	26.00	116.6	52.9	NAK72B52F		NAK72B52FU	
72	54	27.00	117.0	53.1	NAK72B54F		NAK72B54FU	
72	60	30.00	142.9	64.8	NAK72B60F		NAK72B60FU	
72	72	36.00	167.0	75.7	NAK72B72F		NAK72B72FU	
84	18	10.50	24.0	10.9	NAK84B18F		NAK84B18FU	
84	24	14.00	73.3	33.2	NAK84B24F		NAK84B24FU	
84	36	21.00	106.0	48.1	NAK84B36F		NAK84B36FU	
84	48	28.00	132.0	59.9	NAK84B48F		NAK84B48FU	
84	52	30.33	133.0	60.3	NAK84B52F		NAK84B52FU	
84	54	31.50	134.0	60.8	NAK84B54F		NAK84B54FU	
84	60	35.00	164.0	74.4	NAK84B60F		NAK84B60FU	

SEE COMPONENTS ON PAGE 31-10

Toll-free: 1-800-99VALCO
Phone: (+1) 419-678-8731
Fax: (+1) 419-678-2200

ECLIPSE (Brown Out) - 1.5"
FRAMED CARTRIDGE

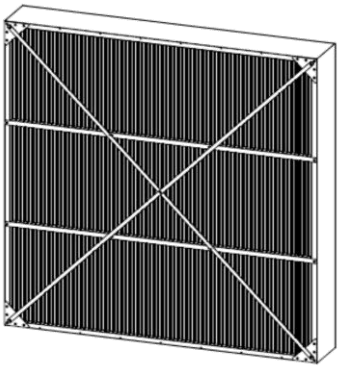

ECLIPSE - FRAMED CARTRIDGE

ALL DIMENSIONS ARE +/- 1/8"

					ASSEMBLED FRAMED		UNASSEMBLED FRAMED	
WIDTH IN	HEIGHT IN	AREA FT²	SHIP WEIGHT		1.5" SPACING		1.5" SPACING	
			Lbs.	Kgs	PART NO.	LIST PRICE	PART NO.	LIST PRICE
48	48	16.00	#N/A		81948X48F		81948X48FU	
48	72	24.00	#N/A		81948X72F		81948X72FU	

Toll-free: 1-800-99VALCO
Phone: (+1) 419-678-8731
Fax: (+1) 419-678-2200

Nightair (Brown Out) - TRAP

1.5" FRAMED COMPONENTS

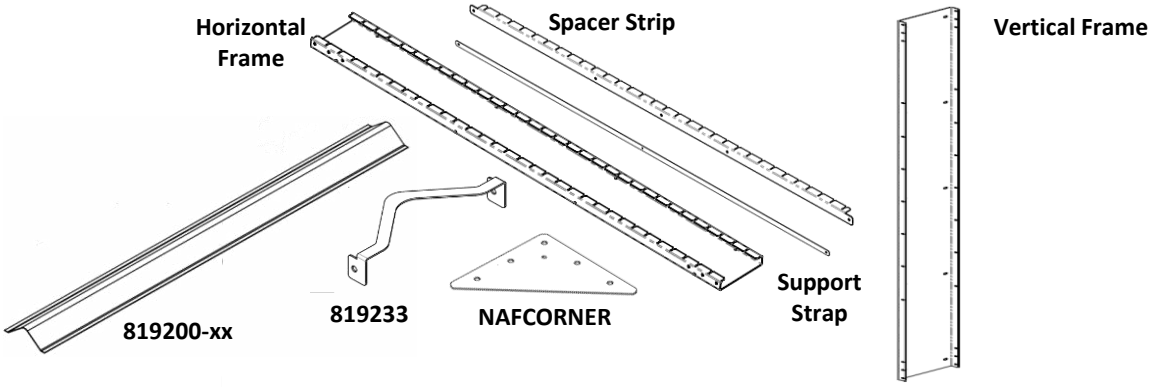

Decription	Part Number									List Price
#12 X 1/2” Screw	690276									
3/16” Rivet	954099									
Wavy Spacer	819233									
Corner Brace	NAFCORNER									
Height	**18”**	**24”**	**36”**	**48”**	**52”**	**54”**	**60”**	**72”**	**84”**	
Black PVC Panel				819200-48				819200-72		CALL
Vertical Frame				819267				819158		CALL
Width	**18”**	**24”**	**36”**	**48”**	**52”**	**54”**	**60”**	**72”**	**84”**	
Horizontal Frame, 1.5”				819246				819246		CALL
Spacer Strip, 1.5”				819248				819248		CALL

Toll-free: 1-800-99VALCO
Phone: (+1) 419-678-8731
Fax: (+1) 419-678-2200

Nightair (Black Out) - & 1"
ROD CARTRIDGE

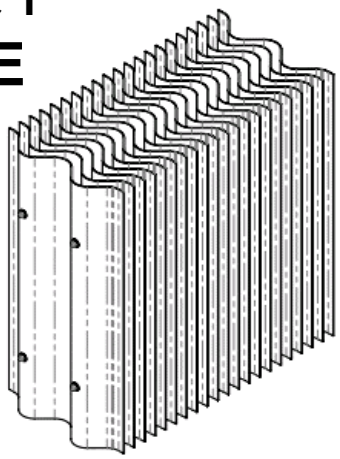

NIGHTAIR - ROD CARTRIDGE

ALL DIMENSIONS ARE +/- 1/8"

WIDTH IN	HEIGHT IN	AREA FT²	SHIP WEIGHT		UNASSEMBLED ROD 1" SPACING	
			Lbs.	Kgs	PART NO.	LIST PRICE
18	18	2.25	8.4	3.8	81918B18RU	
18	24	3.00	10.80	4.9	81918B24RU	
18	36	4.50	15.60	7.1	81918B36RU	
18	48	6.00	21.10	9.6	81918B48RU	
18	52	6.50	22.70	10.3	81918B52RU	
18	54	6.75	23.50	10.7	81918B54RU	
18	60	7.50	33.30	15.1	81918B60RU	
18	72	9.00	30.70	13.9	81918B72RU	
18	84	10.50	336.00	152.4	81918B84RU	
24	18	3.00	11.50	5.2	81924B18RU	
24	24	4.00	14.80	6.7	81924B24RU	
24	36	6.00	21.40	9.7	81924B36RU	
24	48	8.00	28.90	13.1	81924B48RU	
24	52	8.67	31.10	14.1	81924B52RU	
24	54	9.00	32.20	14.6	81924B54RU	
24	60	10.00	35.50	16.1	81924B60RU	
24	72	12.00	42.10	19.1	81924B72RU	
24	84	14.00	49.40	22.4	81924B84RU	
36	18	4.50	17.80	8.1	81936B18RU	
36	24	6.00	22.90	10.4	81936B24RU	
36	36	9.00	33.10	15.0	81936B36RU	
36	48	12.00	44.70	20.3	81936B48RU	
36	52	13.00	48.10	21.8	81936B52RU	
36	54	13.50	49.80	22.6	81936B54RU	
36	60	15.00	54.90	24.9	81936B60RU	
36	72	18.00	65.10	29.5	81936B72RU	
36	84	21.00	76.30	34.6	81936B84RU	

SEE COMPONENTS ON PAGE 31-10

Toll-free: 1-800-99VALCO
Phone: (+1) 419-678-8731
Fax: (+1) 419-678-2200

Nightair (Black Out) - 1"
ROD CARTRIDGE

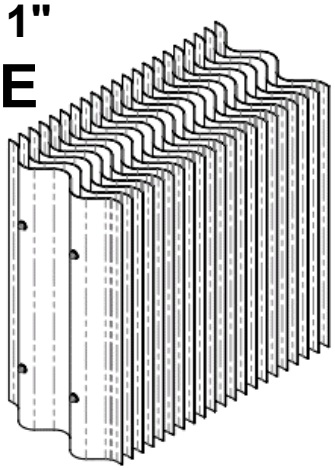

NIGHTAIR - ROD CARTRIDGE

ALL DIMENSIONS ARE +/- 1/8"

					UNASSEMBLED ROD	
WIDTH IN	HEIGHT IN	AREA FT²	SHIP WEIGHT		1" SPACING	
			Lbs.	Kgs	PART NO.	LIST PRICE
48	18	6.0	23.6	10.7	81948B18RU	
48	24	8.0	30.3	13.7	81948B24RU	
48	36	12.0	43.8	19.9	81948B36RU	
48	48	16.0	59.2	26.9	81948B48RU	
48	52	17.3	63.7	28.9	81948B52RU	
48	54	18.0	65.9	29.9	81948B54RU	
48	60	20.0	72.7	33.0	81948B60RU	
48	72	24.0	86.2	39.1	81948B72RU	
48	84	28.0	101.1	45.9	81948B84RU	
52	18	6.5	25.7	11.7	81952B18RU	
52	24	8.7	33.0	15.0	81952B24RU	
52	36	13.0	47.7	21.6	81952B36RU	
52	48	17.3	64.5	29.3	81952B48RU	
52	52	18.8	69.4	31.5	81952B52RU	
52	54	19.5	71.8	32.6	81952B54RU	
52	60	21.7	79.2	35.9	81952B60RU	
52	72	26.0	93.9	42.6	81952B72RU	
52	84	30.3	110.1	49.9	81952B84RU	
54	18	6.8	26.7	12.1	81954B18RU	
54	24	9.0	34.3	15.6	81954B24RU	
54	36	13.5	49.6	22.5	81954B36RU	
54	48	18.0	67.0	30.4	81954B48RU	
54	52	19.5	72.1	32.7	81954B52RU	
54	54	20.3	74.7	33.9	81954B54RU	
54	60	22.5	82.3	37.3	81954B60RU	
54	72	27.0	97.6	44.3	81954B72RU	
54	84	31.5	114.6	52.0	81954B84RU	

SEE COMPONENTS ON PAGE 31-10

Toll-free: 1-800-99VALCO
Phone: (+1) 419-678-8731
Fax: (+1) 419-678-2200

Nightair (Black Out) - 1"
ROD CARTRIDGE

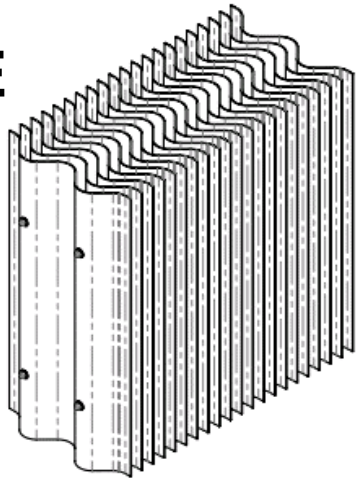

NIGHTAIR - ROD CARTRIDGE

ALL DIMENSIONS ARE +/- 1/8"

WIDTH IN	HEIGHT IN	AREA FT²	SHIP WEIGHT		UNASSEMBLED ROD 1" SPACING	
			Lbs.	Kgs	PART NO.	LIST PRICE
60	18	7.5	29.4	13.3	81960B18RU	
60	24	10.0	37.8	17.1	81960B24RU	
60	36	15.0	54.6	24.8	81960B36RU	
60	48	20.0	73.7	33.4	81960B48RU	
60	52	21.7	79.3	36.0	81960B52RU	
60	54	22.5	82.1	37.2	81960B54RU	
60	60	25.0	90.5	41.1	81960B60RU	
60	72	30.0	107.3	48.7	81960B72RU	
60	84	35.0	125.9	57.1	81960B84RU	
72	18	9.0	35.6	16.1	81972B18RU	
72	24	12.0	45.8	20.8	81972B24RU	
72	36	18.0	66.2	30.0	81972B36RU	
72	48	24.0	89.4	40.6	81972B48RU	
72	52	26.0	96.2	43.6	81972B52RU	
72	54	27.0	99.6	45.2	81972B54RU	
72	60	30.0	109.8	49.8	81972B60RU	
72	72	36.0	130.2	59.1	81972B72RU	
84	18	10.5	41.4	18.8	81984B18RU	
84	24	14.0	53.2	24.1	81984B24RU	
84	36	21.0	76.9	34.9	81984B36RU	
84	48	28.0	104.0	47.2	81984B48RU	
84	52	30.3	111.9	50.8	81984B52RU	
84	54	31.5	115.8	52.5	81984B54RU	
84	60	35.0	127.7	57.9	81984B60RU	

SEE COMPONENTS ON PAGE 31-10

Toll-free: 1-800-99VALCO
Phone: (+1) 419-678-8731
Fax: (+1) 419-678-2200

Nightair (Black Out) - TRAP

1" FRAMED COMPONENTS

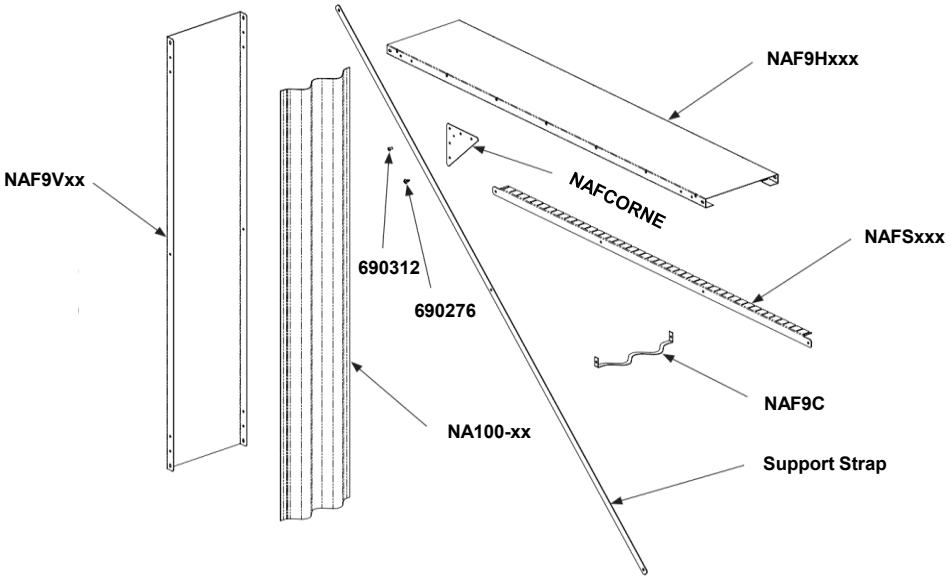

Decription	Part Number									List Price
#12 X 1/2" Screw	690276									
3/16" Rivet	690312									
Wavy Spacer	NAF9C									
Corner Brace	NAFCORNER									
Height	**18"**	**24"**	**36"**	**48"**	**52"**	**54"**	**60"**	**72"**	**84"**	
Black PVC Panel	NA100-18	NA100-24	NA100-36	NA100-48	NA100-52	NA100-54	NA100-60	NA100-72F	NA100-84F	CALL
Vertical Frame	NAF9V18	NAF9V24	NAF9V36	NAF9V48	NAF9V52	NAF9V54	NAF9V60	NAF9V72	NAF9V84	CALL
Width	**18"**	**24"**	**36"**	**48"**	**52"**	**54"**	**60"**	**72"**	**84"**	
Horizontal Frame, 1"	NAF9H18B	NAF9H24B	NAF9H36B	NAF9H48B	NAF9H52B	NAF9H54B	NAF9H60B	NAF9H72B	NAF9H84B	CALL
Spacer Strip, 1"	NAFS18B	NAFS24B	NAFS36B	NAFS48B	NAFS52B	NAFS54B	NAFS60B	NAFS72B	NAFS84B	CALL

1" ROD COMPONENTS

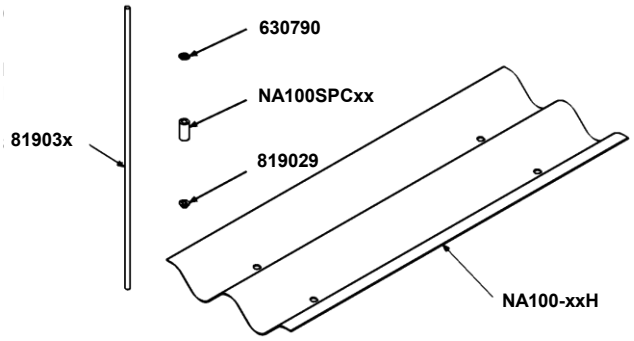

Decription	Part Number									List Price
Push on Retainer	630790									
1/4" Retainer Push Cap	819029									
1" Tall Spacer	NA100SPC1									
Width	**18"**	**24"**	**36"**	**48"**	**52"**	**54"**	**60"**	**72"**	**84"**	
1/4" Galvanized Rod	819030	819031	819032	819033	819034	819035	819036	819037	819038	CALL
Height	**18"**	**24"**	**36"**	**48"**	**52"**	**54"**	**60"**	**72"**	**84"**	
Black PVC Panel	NA100-18H	NA100-24H	NA100-36H	NA100-48H	NA100-52H	NA100-54H	NA100-60H	NA100-72H	NA100-84H	CALL

LIGHT TRAP KITS FOR IN FRONT OF EXHAUST FANS

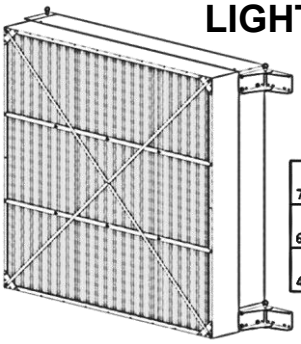

	A (Width Clearance)		B (Height Clearance)		C (Clearance in Closed Position)		D (Clearance in Open Position)	
	in	cm	in	cm	in	cm	in	cm
819000 72" X 72"	84	213.4	74.5	189.2	19	48.3	79	200.7
819010 60" X 60"	72	182.9	62.5	158.8	19	48.3	67	170.2
819020 48" X 48"	60	152.4	50.5	128.3	19	48.3	55	139.7

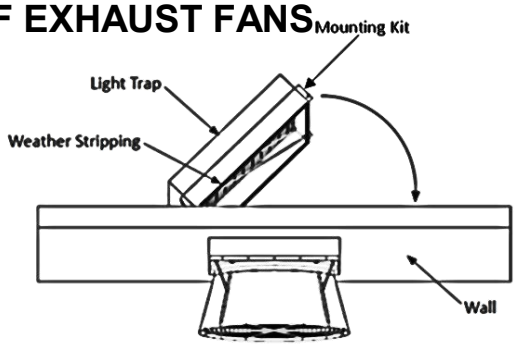

How to Order: - Order (1) Mounting Kit and (1) Framed Light Trap. Fan and shutters sold seperately.

MOUNTING KITS - *Ships Unassembled* - ONLY USED WITH FRAMED LIGHT TRAPS

CATALOG NUMBER	ITEM DESCRIPTION	Typical Size Exhaust Fan	SHIP WEIGHT LBS.	SHIP WEIGHT KGS.	LIST PRICE
819020	9" Deep Mounting Kit for 48" x 48" Framed Light Trap	12" - 24"	64.3	30.0	
NAK48B48F	Light Trap 48H x 48W x 1" Spacing Galvanized Frame Assembled		102.5	47.0	
NAK48B48FU	Light Trap 48H x 48W x 1" Spacing Galvanized Frame Unassembled		78.6	36.0	
819010	9" Deep Mounting Kit for 60" x 60" Framed Light Trap	36" - 48"	82.2	38.0	
NAK60B60F	Light Trap 60H x 60W x 1" Spacing Galvanized Frame Assembled		122.2	56.0	
NAK60B60FU	Light Trap 60H x 60W x 1" Spacing Galvanized Frame Unassembled		122.2	56.0	
819000	9" Deep Mounting Kit for 72" x 72" Framed Light Trap	50" - 54"	95.6	44.0	
NAK72B72F	Light Trap 72H x 72W x 1" Spacing Galvanized Frame Assembled		167.0	76.0	
NAK72B72FU	Light Trap 72H x 72W x 1" Spacing Galvanized Frame Unassembled		166.7	76.0	

Light Traps in front of Exhaust Fans will increase the static pressure, see page 31-02 for air flow data or contact VAL-CO App. Engineering .
Hinged design. Sits into Room 18" when door is closed

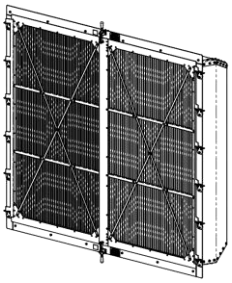

How to Order: - Order (1) Flush Mount Framed Light Trap. Fan & Shutters sold seperately.

FLUSH MOUNT NightAir FAN TRANSITIONS (Black-out)- *Ships Unassembled*

CATALOG NUMBER	ITEM DESCRIPTION	Typical Size Exhaust Fan	SHIP WEIGHT LBS.	SHIP WEIGHT KGS.	LIST PRICE
819085	Flush Mount Framed Light Trap 42H x 42W x 1" - unassembled	24" FG Fans	4324.0	#####	
819025	Flush Mount Framed Light Trap 48H x 48W x 1" - unassembled	24" FG Fans	2621.4	#####	
819075	Flush Mount Framed Light Trap 60H x 72W x 1" - unassembled	36" FG Fans	4324.0	#####	
819045	Flush Mount Framed Light Trap 84H x 72W x 1" - unassembled	54" FG Fans	3021.0	#####	

FLUSH MOUNT ECLIPSE FAN TRANSITIONS (Brown-out) - *Ships Unassembled*

819225	Flush Mount Framed Light Trap 42H x 42W x 1" - unassembled	24" FG Fans		#####	
819215	Flush Mount Framed Light Trap 60H x 72W x 1" - unassembled	36" FG Fans		#####	
819245	Flush Mount Framed Light Trap 72H x 72W x 1" - unassembled	54" FG Fans		#####	
819255	Flush Mount Framed Light Trap 84H x 72W x 1" - unassembled	54" FG Fans		#####	

Light Traps in front of Exhaust Fans will increase the static pressure, see page 31-02 for air flow data or contact VAL-CO App. Engineering .
Light Trap is included. Hinged design. **For Fiberglass fans only. Please contact VAL-Co Engineering to use with galvanized fan.**

ADAPTER KITS

819240	Adapter kit to mount a Mach 57 Fan to either 819045 or 819255	57" FG Fans		#####	
819265	Conversion Kit, Converts on 819025 to an Eclipse	24" FG Fans		#####	
819260	Adapter kit to mount a 50" Interior Mount fan to a 819045 / 819255 transition	50" FG Fans		#####	

Toll-free: 1-800-99VALCO
Phone: (+1) 419-678-8731
Fax: (+1) 419-678-2200

SECTION 33
FOGGING SYSTEMS

IN THIS CATALOG SECTION

PAGE NUMBER	CONTENTS
33-02	Pumps
33-03	Filters
33-04	Controls, Sensors, Valves, Hoses, Main Line
33-05	Maintenance - Pump Oil, Regulators, Nozzles
33-06	Atomization Lines
33-07 thru 33-08	Fittings
33-09	Tools
33-10	Suspension Hardware
33-11	Low Pressure Sentry Disinfectant Delivery System
33-12	Weeden Sprinkler System - International Sales Only

Please call customer service or your local representative for assistance in quoting & ordering PolAir High Pressure Fog Systems.

VAL-CO HIGH PRESSURE FOG					
Pump Pressure		Nozzle Design Flow			
PSI	BAR	GPM	GPH	LPM	LPH
1000	70	0.0233	1.40	0.0830	5.3
1500	105	0.0323	1.94	0.1217	7.3

Assumptions:
---> Nozzle design estimated at 200psi system pressure drop
---> Nozzle flow at Pump Pressure minus 100 psi

Toll-free: 1-800-99VALCO
Phone: (+1) 419-678-8731
Fax: (+1) 419-678-2200

POLAIR HIGH PRESSURE FOG SYSTEM
SYSTEM COMPONENTS

PUMP KITS

Unless otherwise stated, pumps do NOT include filter kits or controls

CATALOG #	Pressure (PSI) / Flow Rate (GPM)	Horsepower / Voltage (V)	Phase / Frequency (Hz)	Full Load Amps (A) / 400HC Reqd.	Input Hose Barb (in.) / Output Fitting (MNPT in.)	SHIP WEIGHT LBS.	SHIP WEIGHT KG.	LIST PRICE
1P / 50Hz								
814045	1000	0.75	1	10/5	0.5	130.0	58.9	
	0.35	110/220	50	None Includes: VE-010-001 23A	0.5			
1P / 60Hz								
814050	1000	0.75	1	8.4 / 4.2	0.50	126.1	57.2	
	0.45	115/208-230	60	None Includes: VE-010-001 23A	0.50			
814065	1000	3.0	1	28/15.5-14	0.50	157.0	71.2	
	2.1 - 3.7	115/208/230	60	43A / 23A	0.50			
814080	1000	5	1	25-23	0.50	206.0	93.4	
	3.3 - 6.0	208-230	60	43A	0.50			
814085	1000	7.5	1	31-29	0.75	345.0	156.5	
	4.9 - 8.9	208-230	60	43A	0.50			
814105	1000	10	1	38	1.00	441.3	200.2	
	7.2 - 12.9	230	60	43A	0.75			
3P / 50Hz								
814057	1000	2.0	3	6-5.8/2.9	0.50	76.0	34.5	
	0.9-1.6	190/380	50	23A	0.50			
814055	1000	3.0	3	8.5 - 4.9	0.50	152.0	68.9	
	1.8 - 3.1	230/400	50	23A	0.50			
814070	1000	5.0	3	13.8 / 8	0.50	208.0	94.3	
	2.8 - 5.0	230/400	50	23A	0.50			
814090	1000	7.5	3	11.2	0.75	354.7	160.9	
	4.3 - 7.8	400	50	23A	0.50			
3P / 60Hz								
814060	1000	3.0	3	9-8.4 / 4.2	0.50	147.7	67.0	
	2.1 - 3.8	208-230/460	60	23A	0.50			
814075	1000	5	3	13.9-13.4/6.7	0.50	200.0	90.7	
	3.4 - 6.1	208-230/460	60	23A	0.50			
814095	1000	7.5	3	19.8-19/9.8	0.75	398.5	180.8	
	5.0 - 9.0	208-230/460	60	23A	0.50			
814120	1000	15	3	38-36/18	1.00	502.3	227.9	
	15	208-230/460	60	43A / 23A	0.75			
814130	1000	15	3	38-36/18	1.00	530.6	240.7	
	11 - 19.8	208-230/460	60	43A / 23A	0.75			
814200	1500	15	3	38-36/19	1.00	563.8	255.7	
	7.3 - 13.1	208-230/460	60	43A	0.75			

Toll-free: 1-800-99VALCO
Phone: (+1) 419-678-8731
Fax: (+1) 419-678-2200

POLAIR HIGH PRESSURE FOG SYSTEM
SYSTEM COMPONENTS

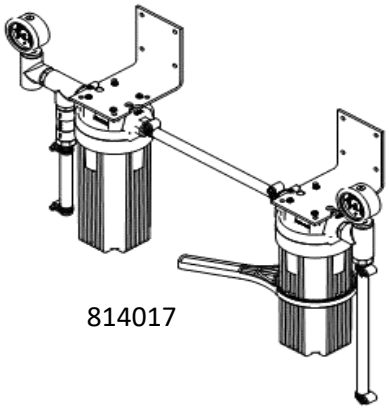

814017

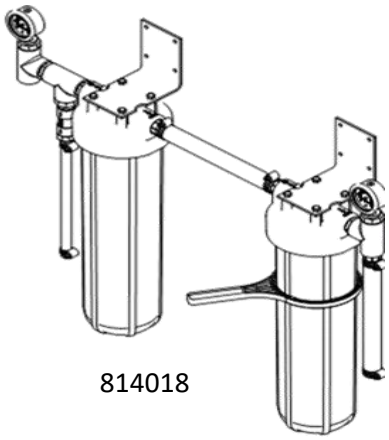

814018

814019

FILTER KITS

Filter kits include filters and wrench for filter housing(s)

CATALOG #	ITEM DESCRIPTION	SHIP WEIGHT LBS.	SHIP WEIGHT KG.	LIST PRICE
814017	Filter kit, 8 GPM Max, 5 & 1 micron .75" FNPT in, 0.5" hose out	15.1	6.8	
814018	Filter Kit, 30 GPM Max, 5 & 1 micron 1" FNPT in, 1" hose out	33.0	15.0	
814019	Filter Kit, 8GPM, Scale Inhibit, 1/2" or 1" HB in, 1/2" hose out, incl. 1 PM3P775 filter	11.0	5.0	

WATER TREATMENT - SCALE REMOVAL

For systems under 8GPM use PM3P775 filter cartridge for scale control. Larger systems use PM10TS Dispensing system and treatment solution

CATALOG #	ITEM DESCRIPTION	SHIP WEIGHT LBS.	SHIP WEIGHT KG.	LIST PRICE
814019	Filter Kit, 8GPM, Scale Inhibit, 1/2" or 1" HB in, 1/2" hose out, incl. 1 PM3P775 filter	11.0	5.0	
PM10TS	Water Treatment System - incl. 230VAC pump, PMCPABU1	25.0	11.3	
PMCPABU1	Water Treatment Solution - 5 Gallon (PF) Treats up to 80,000 gallons at 3 ppm concetration	50.0	22.7	
PMOTKU62	Parafos Test Kit - Use with water treatment solution to determine residual levels - 40 tests/kit	0.0	0.0	

MAINTENANCE - FILTERS

CATALOG #	ITEM DESCRIPTION	SHIP WEIGHT LBS.	SHIP WEIGHT KG.	LIST PRICE
PM3P775	Scale Inhibitor Filter 10"	1.1	0.5	
PMCLR1-10	1 Micron Water Filter 10"	0.4	0.2	
PMCLR-1-20	1 Micron Water Filter 20"	0.8	0.4	
PMFILT1MBIGBLUE	1 Micron Water Filter 20" wide (4.5")	2.2	1.0	
PMCLR-5-10	5 Micron Water Filter 10"	0.4	0.2	
PMCLR-5-20	5 Micron Water Filter 20" standard	0.8	0.4	
PMFILT5MBIGBLUE	5 Micron Water Filter 20" wide (4.5")	2.2	1.0	
PMCLR10-10	10 Micron Water Filter 10"	0.4	0.2	
PMCLR10-20	10 Micron Water Filer 20"	0.7	0.3	
PMFILTERWRENCH	Wrench for Standard Blue Housing	0.2	0.1	
PMBIGBLUEWRENCH	Wrench for Big Blue & Yellow Housings	0.2	0.1	

Toll-free: 1-800-99VALCO
Phone: (+1) 419-678-8731
Fax: (+1) 419-678-2200

POLAIR HIGH PRESSURE FOG SYSTEM
SYSTEM COMPONENTS

CONTROLS

400HC has inputs for up to 2 temp sensors and 1 Rh sensor or 2 external on/off signals
400HC can control up to (2) Zone Valves

CATALOG #	ITEM DESCRIPTION	SHIP WEIGHT LBS.	SHIP WEIGHT KG.	LIST PRICE
VE-010-000	POLAIR 400HC - No Contactor - 2 Stages Cooling	8.5	3.9	
VE-010-001	POLAIR 400HC - 23 Amp - 2 Stages Cooling	9.0	4.1	
VE-010-101	POLAIR 400HC - 43 Amp - 2 Stages Cooling	9.0	4.1	
VE-010-201	POLAIR 400HC - 60 Amp - 2 Stages Cooling	9.0	4.1	

SENSORS

		SHIP WEIGHT		LIST PRICE
SR-017-100	Temp Sensor	0.2	0.1	
921799	Relative Humidity Sensor - Water Resistant	1.0	0.5	
PA-56	Relative Humidity Sensor - Dust Tight	0.5	0.2	
ZC1150R	Sensor Wire - Per Foot	0.0	0.0	
ZC1150RL	Sensor Wire - 1,000 Foot Roll	21.2	9.6	
WS-27	Scotchlok - Wire Connector	0.0	0.0	

ZONE VALVES

Note that improper use of zone valves may result in significantly reduced pump life if zone valves cause pump to recirculate more than 50% of total pump output

		SHIP WEIGHT		LIST PRICE
PM1SC	1SC 24 Volt Zone Valve Snap Action	7.6	3.5	
PM1SCMTR24V1500CD	1SC 24 Volt Motorized Zone Valve - slow opening	8.4	3.8	
814005	Repair Kit, SS Zone Valve, For PM1SCMTR24V1500CD	1.0	0.5	

DRAIN VALVES

No more than (1) automatic drain valve for every GPM of pump flow

		SHIP WEIGHT		LIST PRICE
PMDV15-1	Automatic Drain Valve for 1/2" Atomization Line (1/2" Tube to 3/8" Male 90, 15' Drop Hose, Clamp & Drain Valve Assembly)	2.3	1.1	
PMDVREPAIRKIT	Drain Valve Repair Kit for PMDV15-1	0.0	0.0	
PMDVADJ	Drain Valve Assembly	0.2	0.1	
PMDVWS	Drain Valve Washer - Split for PMDV15-1	0.0	0.0	
PMRBFLUSHKIT	Manual Drain Valve	2.3	1.1	

FLEXIBLE HIGH PRESSURE HOSES & BALL VALVES

		SHIP WEIGHT		LIST PRICE
PMHPHOSE40	High press. Flex hose - 1/2" MNPT swivel ends - 40" L	1.2	0.6	
PMHPHOSE3/4	High press. Flex hose - 3/4" MNPT swivel ends - 36" L	1.3	0.6	
PMBVL	High press. Locking Ball Valve, Brass - 1/2" FNPT ports	0.6	0.3	
PMBVSS1/2	High press. Ball Valve, SS - 1/2" FNPT ports	0.6	0.3	
PMBVL3-8	High press. Ball Valve, Brass - 3/8" FNPT ports	0.6	0.3	

MAIN LINE

		SHIP WEIGHT		LIST PRICE
814192	Tube, 20' x 1/2" O.D. x .028" Wall 304 Stainless Steel	2.9	1.3	
814194	Tube, 20' x 1/2" O.D. x .035" Wall 316 Stainless Steel	3.6	1.6	
814011	Tube, 3/4" OD 0.035W 18'L 316SS	4.9	2.2	

Toll-free: 1-800-99VALCO
Phone: (+1) 419-678-8731
Fax: (+1) 419-678-2200

POLAIR HIGH PRESSURE FOG SYSTEM
SYSTEM COMPONENTS

MAINTENANCE - PUMP OIL

Pump oil should be changed after the first 50 hrs. and regularly every 300 hrs/3 months, whichever comes first

CATALOG #	ITEM DESCRIPTION	SHIP WEIGHT LBS.	SHIP WEIGHT KG.	LIST PRICE
PMCAT6107	Cat Pump oil - ISO 68 - 21 oz (625cc) bottle	1.3	0.6	
814173	30W Oil, Non-detergent - 16 oz (475cc) bottle	1.0	0.6	
814177	50w Oil, GP SERIES 220, 2.5 Gallon	25.0	0.6	
814178	50w Oil, GP SERIES 220, 16OZ	1.2	0.6	
PMGPOIL100734	80/90W Oil, Non-detergent - 1 X 2.5 gal (9.45l) bottles	1.1	0.5	
PMGPOIL100735	80/90W Oil, Non-detergent - 2 X 2.5 gal (9.45l) bottles	41.8	19.0	
PMCAT34334	Drain Kit, Oil, CAT Pumps - No oil included	0.8	0.4	

PUMP #	ITEM DESCRIPTION	OIL REQUIRED	VOLUME
814045	PUMP HPF, Demo 1000PSI,0.35GPM .75HP, 110/220V, 1PH, 50HZ	814173	11.8 fl. Oz.
814050	PUMP HPF, Demo,1000PSI 0.45GPM .75HP, 115/208-230V, 1PH, 60HZ	814173	11.8 fl. Oz.
814055	PUMP, HPF, 1000PSI, 1.8-3.1GPM 3HP, 230/400V, 3PH, 50HZ	814173	14 fl. Oz.
814060	PUMP, HPF, 1000PSI, 2.1-3.8GPM 3HP, 208-230/460V, 3PH, 60HZ	814173	14 fl. Oz.
814065	PUMP HPF, 1000PSI, 2.1-3.7GPM 3HP, 115/208-230V, 1PH, 60HZ	814173	14 fl. Oz.
814070	PUMP, HPF, 1000PSI, 2.8-5.0GPM 5HP, 230/400V, 3PH, 50HZ	814173	37.2 fl. Oz.
814075	PUMP, HPF, 1000PSI, 3.4-6.1GPM 5HP, 208-230/460V, 3PH, 60HZ	814173	37.2 fl. Oz.
814080	PUMP HPF, 1000PSI, 3.3-6.0GPM 5HP, 208-230V, 1PH, 60HZ	814173	37.2 fl. Oz.
814085	PUMP HPF, 1000PSI, 4.9-8.9GPM 7.5HP, 208-230V, 1PH, 60HZ	814173	37.2 fl. Oz.
814090	PUMP, HPF, 1000PSI, 4.3-7.8GPM 7.5HP, 400V, 3PH, 50HZ	814173	37.2 fl. Oz.
814095	PUMP, HPF, 1000PSI, 5-9GPM 7.5HP, 208-230/460V, 3PH, 60HZ	814173	37.2 fl. Oz.
814105	PUMP HPF, 1000PSI, 7.2-12.9GPM 10HP, 230V, 1PH, 60HZ	814177 / 814178	64.2 fl. Oz.
814120	PUMP HPF, 1000PSI, 15GPM, 15HP 208-230/460V 3PH 60HZ	814177 / 814178	64.2 fl. Oz.
814200	PUMP HPF 1500PSI 7.3 - 13.1GPM 15HP 208-230/460V 3PH 60HZ	814177 / 814178	64.2 fl. Oz.

MAINTENANCE - REGULATORS

Regulators should be oiled every month with 4 drops of light household oil

		SHIP WEIGHT		LIST PRICE
PMBR5-2	Pressure Regulator, 5GPM (19 lpm), 750-2000psi (51 - 138 bar)	1.4	0.6	
PMBR5-2REB	Rebuild Kit, Pressure Regulator, 5GPM, 750-2000psi	1.4	0.6	
PMBR10-2	Pressure Regulator, 10GPM (38lpm), 750-2000psi (51 - 138 bar)	2.5	1.1	
PMBR10-2REB	Rebuild Kit, Pressure Regulator, 10GPM, 750-2000psi	0.0	1.1	
PMCAT7022	Pressure Regulator, 2.5 - 25 GPM (9 - 95 lpm), 500-2000psi (35 - 138 bar)	5.0	2.3	
PMCAT7595	Relief Valve, 53GPM max, 100-2600psi, 3/4" inlet, 1/2" outlet	1.8	0.8	

MAINTENANCE - NOZZLE LINES

		SHIP WEIGHT		LIST PRICE
814012R	Nozzle Assembly, .0065 Orifice, 303 SS body and seals w/ check valve	0.0	0.1	
814291R	Nozzle Assembly, .0065 Orifice, 303 SS body w/ check valve with EPDM O-Ring Seal	0.0	0.1	
814014	Nozzle Assembly, .0065 Orifice, 303 SS body and seals w/ check valve Flat Seal	0.0	0.1	
814015	Nozzle Assembly, .0065 Orifice, 303 SS body and seals w/ check valve with Cone Seal	0.0	0.1	
814218	Nozzle Assembly, .0065 Orifice, 303 SS body and seals w/ check valve, Copper Seal	0.0	0.1	
814282	Nozzle Assembly, .0065 Orifice, 303 SS body and seals, w/ check valve, 6 threads	0.0	0.1	
814268	Mist Nozzle, Brass, 012" Orifice, 1015 Psi Max, 10-32 M Thrd, .026GPM @800Psi *	0.0	0.1	
814184	1/2" Compression Brass Union with a Nozzle Assembly	0.3	0.1	
PMNS-F303	Seal, Flanged, 303SS for 814012 nozzle	0.0	0.1	
PMPLUG	Nozzle Plug, 303SS body and seal	0.0	0.1	
814281	Nozzle Plug, 303SS body, copper seal, 6 threads	0.0	0.1	
PMVC-312-8	Cap, Plastic, Re-useable for Nozzle protection	0.0	0.1	
PMNOZ8BRUSH	Wire Brush, SS, Special Nozzle Cleaning, Plastic Handle	0.0	0.1	

* Not for thin wall pipe.

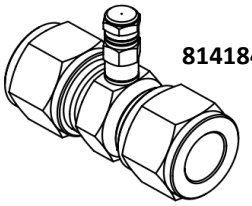
814184

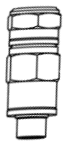
814012R

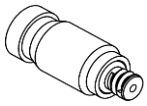
814268

PMNS-F303

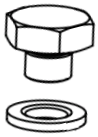
PMPLUG

Toll-free: 1-800-99VALCO
Phone: (+1) 419-678-8731
Fax: (+1) 419-678-2200

POLAIR HIGH PRESSURE FOG SYSTEM
ATOMIZATION LINES
20' x 1/2" O.D. x .035" Wall 316 Stainless Steel Tube

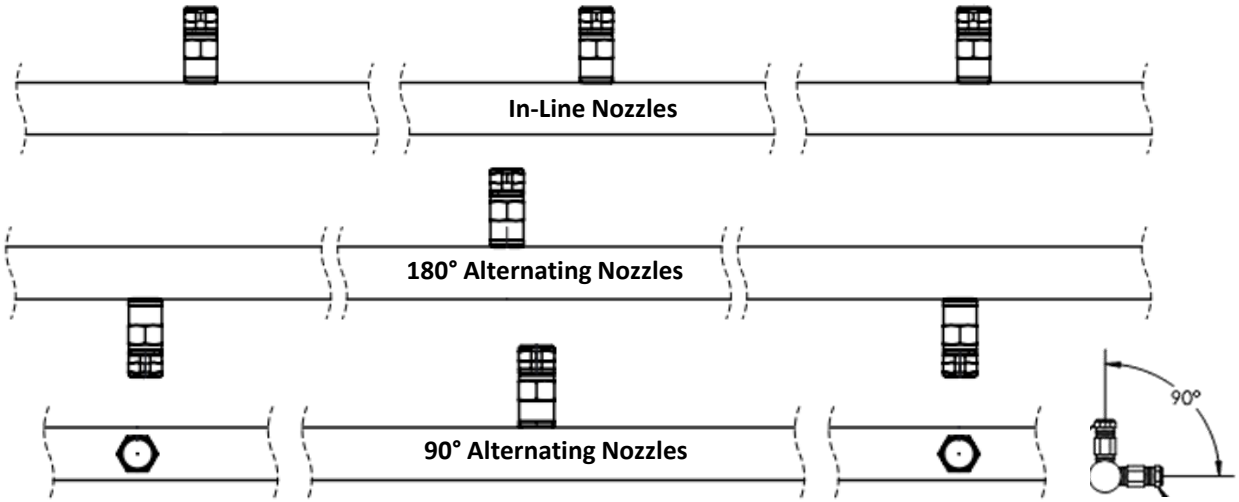

Description	Ship Weight		In-Line Nozzle		180° Alternating Nozzles		90° Alternating Nozzles	
	Lbs	Kgs	Part Number	List Price	Part Number	List Price	Part Number	List Price
1 Nozzle 240.0" SPACING	3.82	1.73	814211-001					
2 Nozzle 120.0" SPACING	3.84	1.74	814211-002		814212-002		814213-002	
3 Nozzle 80.0" SPACING	3.86	1.75	814211-003		814212-003		814213-003	
4 Nozzle 60.0" SPACING	3.87	1.76	814211-004		814212-004		814213-004	
5 Nozzle 48.0" SPACING	3.89	1.76	814211-005		814212-005		814213-005	
6 Nozzle 40.0" SPACING	3.90	1.77	814211-006		814212-006		814213-006	
7 Nozzle 34.3" SPACING	3.92	1.78	814211-007		814212-007		814213-007	
8 Nozzle 30.0" SPACING	3.94	1.79	814211-008		814212-008		814213-008	
9 Nozzle 26.7" SPACING	3.95	1.79	814211-009		814212-009		814213-009	
10 Nozzle 24.0" SPACING	3.97	1.80	814211-010		814212-010		814213-010	
11 Nozzle 21.8" SPACING	3.98	1.81	814211-011		814212-011		814213-011	
12 Nozzle 20.0" SPACING	4.00	1.81	814211-012		814212-012		814213-012	
13 Nozzle 18.5" SPACING	4.02	1.82	814211-013		814212-013		814213-013	
14 Nozzle 17.1" SPACING	4.03	1.83	814211-014		814212-014		814213-014	
15 Nozzle 16.0" SPACING	4.05	1.84	814211-015		814212-015		814213-015	
16 Nozzle 15.0" SPACING	4.06	1.84	814211-016		814212-016		814213-016	
17 Nozzle 14.1" SPACING	4.08	1.85	814211-017		814212-017		814213-017	
18 Nozzle 13.3" SPACING	4.10	1.86	814211-018		814212-018		814213-018	
19 Nozzle 12.6" SPACING	4.11	1.86	814211-019		814212-019		814213-019	
20 Nozzle 12.0" SPACING	4.13	1.87	814211-020		814212-020		814213-020	
21 Nozzle 11.4" SPACING	4.14	1.88	814211-021		814212-021		814213-021	
22 Nozzle 10.9" SPACING	4.16	1.89	814211-022		814212-022		814213-022	
23 Nozzle 10.4" SPACING	4.18	1.90	814211-023		814212-023		814213-023	
24 Nozzle 10.0" SPACING	4.19	1.90	814211-024		814212-024		814213-024	

Toll-free: 1-800-99VALCO
Phone: (+1) 419-678-8731
Fax: (+1) 419-678-2200

POLAIR HIGH PRESSURE FOG SYSTEM
SYSTEM COMPONENTS FITTINGS

ITEM DESCRIPTION			MATERIAL	CATALOG NUMBER	LIST PRICE
Tube Straight		1/2" Tube - 1/2" Tube	St. Steel	PMSS8U316	
			Brass	PMCF20	
		3/4" Tube - 1/2" Tube	St. Steel	PMSS12RU8316	
			Brass	PM12RU8	
		3/4" Tube - 3/4" Tube	St. Steel	PMSS12U316	
			Brass	PM12UBR	
Tube Elbow		1/2" Tube	St. Steel	PMSS8LU316	
			Brass	PMCF21	
		3/4" Tube	St. Steel	PMSS12LU316	
			Brass	PM12LUBR	
Tube Tee		1/2" Tube	St. Steel	PMSS8TTT316	
			Brass	PMCF22	
		3/4" Tube	St. Steel	PMSS12TTT316	
			Brass	PM12TTTBR	
Tube Cross		1/2" Tube	St. Steel	PMSS8C316	
			Brass		
		3/4" Tube	St. Steel	PMSS12C316	
			Brass		
Tube to MNPT		1/2" Tube - 3/8" MNPT	St. Steel	PMSS8CM6316	
			Brass	PMCF10	
		1/2" Tube - 1/2" MNPT	St. Steel	PMSS8CM8316	
			Brass	PMCF24	
		3/4" Tube - 1/2" MNPT	St. Steel		
			Brass	PM12CM8BR	
		3/4" Tube - 3/4" MNPT	St. Steel	PMSS12CM12316	
			Brass		
		1" Tube - 1" MNPT	St. Steel	PMSS16CM16316	
			Brass		
Tube to FNPT	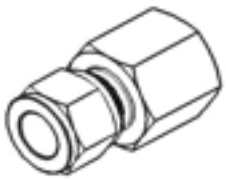	1/2" Tube - 1/2" FNPT	St. Steel	PMSS8CF8316	
			Brass	PMCF23	
		1/2" Tube - 3/4" FNPT	St. Steel		
			Brass	PMCF8CF12BR	
		3/4" Tube - 3/4" FNPT	St. Steel		
			Brass	PM12CF12BR	
Tube Cap		1/2" Tube	St. Steel	PMSS8CP316	
			Brass	PMCF8CPBR	
		3/4" Tube	St. Steel	PM12CP	
			Brass		

Toll-free: 1-800-99VALCO
Phone: (+1) 419-678-8731
Fax: (+1) 419-678-2200

POLAIR HIGH PRESSURE FOG SYSTEM
SYSTEM COMPONENTS FITTINGS

ITEM DESCRIPTION			MATERIAL	CATALOG NUMBER	LIST PRICE
Tube T X MNPT	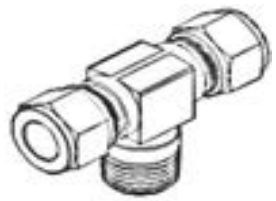	1/2" Tube x 3/8" MNPT	St. Steel		
			Brass	PMCF28	
		1/2" Tube x 1/2" MNPT	St. Steel	PMSS8ST8316	
			Brass	PMCF25	
		3/4" Tube x 1/2" MNPT	St. Steel		
			Brass	PM12TTM8BR	
Tube T X FNP	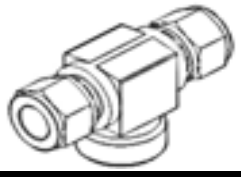	1/2" Tube x 3/8" MNPT	St. Steel		
			Brass		
		1/2" Tube x 1/2" MNPT	St. Steel	PMSS8TTF8316	
			Brass		
ElboW to MNP		1/2" Tube x 1/2" MNPT	St. Steel	PMSS8LM8316	
			Brass	PMCF26	
			St. Steel		
			Brass		
FNPT X FNPT	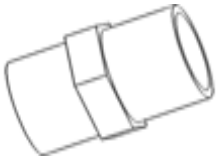	1/2" FNPT - 1/2" FNPT	St. Steel	PMSC36906113	
			Brass	PMBFCOUPLING1/2	
		3/4" FNPT - 3/4" FNPT	St. Steel		
			Brass	PMBFCOUPLING3/4	
		1" FNPT - 1" FNPT	St. Steel		
			Brass		
MNPT X HB	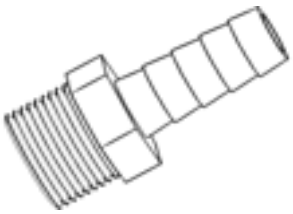	1/2" MNPT - 1/2" Hose	St. Steel		
			Brass	PMHB1/2	
		3/4" MNPT - 3/4" Hose	St. Steel		
			Brass	PMHB3/4	
		1" MNPT - 1" Hose	St. Steel		
			Brass	PMHB1	
FNPT X HB	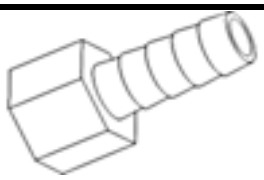	1/2" FNPT - 1/2" Hose	St. Steel		
			Brass	PMHB1/2F	
		3/8" FNPT - 1/2" Hose	St. Steel		
			Brass		
MNPT X HB 90º		1/2" MNPT - 3/8" Hose	St. Steel		
			Brass	PMHB1/2X3/890	
		1/2" MNPT - 1/2" Hose	St. Steel		
			Brass	PMHB1/290	

Toll-free: 1-800-99VALCO
Phone: (+1) 419-678-8731
Fax: (+1) 419-678-2200

POLAIR HIGH PRESSURE FOG SYSTEM
SYSTEM COMPONENTS FITTINGS

ITEM DESCRIPTION			Material	CATALOG NUMBER	LIST PRICE
Tube Ferrules		1/2" SS	Front	PM8FF316	
			Rear	PM8FR316	
Tube Ferrules		3/4" SS	Front	PM12FF316	
			Rear	PM12FR316	
Brass Elbow FNPT		1/2" FNPT x 1/2" FNPT	St. Steel	PMELBOW1/2SS	
			Brass	PMBF90X1/2	
		3/4" FNPT x 3/4" FNPT	St. Steel		
			Brass	PMBF90X3/4	

TOOLS

CATALOG #	ITEM DESCRIPTION	SHIP WEIGHT LBS.	SHIP WEIGHT KG.	LIST PRICE
PMPIPECUTTER	SS Pipe Cutter	1.0	0.45	
PMFLEXTUBECUTTER	Nylon Tubing Cutter	0.1	0.05	
VC300	Cable Cutter, Manual, 3/16" - Model RC-8	0.0	0.00	
PM8-2829S-I	Tube Bender 1/2"	0.0	0.00	
PMTEF30	Teflon Tape, Roll, 1/2" x 520"	0.0	0.01	

Toll-free: 1-800-99VALCO
Phone: (+1) 419-678-8731
Fax: (+1) 419-678-2200

POLAIR HIGH PRESSURE FOG SYSTEM
SYSTEM COMPONENTS

SUSPENSION HARDWARE

Support HPF tubing every 6' if directly attached to a solid structure;
Support every 2' if attached to a horizontal cable, cable attached every 8' to a solid structure

CATALOG #	ITEM DESCRIPTION	SHIP WEIGHT LBS.	SHIP WEIGHT KG.	LIST PRICE
PMKGHK4	Tube Clamp, Rubber-lined, Single, 1/2" with Mounting Baseplate	0.2	0.11	
PMKGHK5	Tube Clamp, Rubber-lined, Double, 1/2" with Mounting Baseplate	0.3	0.13	
PMKGHK6	Tube Clamp, Rubber-lined, Single, 3/4" with Mounting Baseplate	0.0	0.00	
PMKGHK7	Tube Clamp, Rubber-lined, Double, 3/4" with Mounting Baseplate	0.0	0.00	
PMSTRAP375	Tube Strap, 3/8"	0.0	0.01	
PMSTRAP50	Tube Strap, Rubber-lined, 1/2" - Box of 100	1.8	0.80	
PMSTRAP75	Tube Strap, 3/4" - Box of 100	2.2	1.00	
690175	Screw, #12 X 1-1/2, TEK, Plate Hex Washer Head	0.0	0.01	
PM2H4CADDY	Hanger Clip, Hammer-On, 3/32" - 9/64" Thickness Flange	0.0	0.00	
PM4H24CLIP	Hanger Clip, Hammer-On, 1/4" Thickness Flange	0.0	0.01	
PMCABL1000SS	Cable, SS, 7 X 7, 1/16" - 1000' Roll	7.7	3.48	
PMTIGHT	Cable Tightener, 9" - for SS Cable (1 for every 100' of cable)	0.8	0.36	
PMSLEEVE	Cable Sleeve, Aluminum - for SS Cable (requires swage tool)	0.0	0.00	
PMTT6	Wire Tie, UV-Resistant, Black, 7.5"	0.0	0.00	

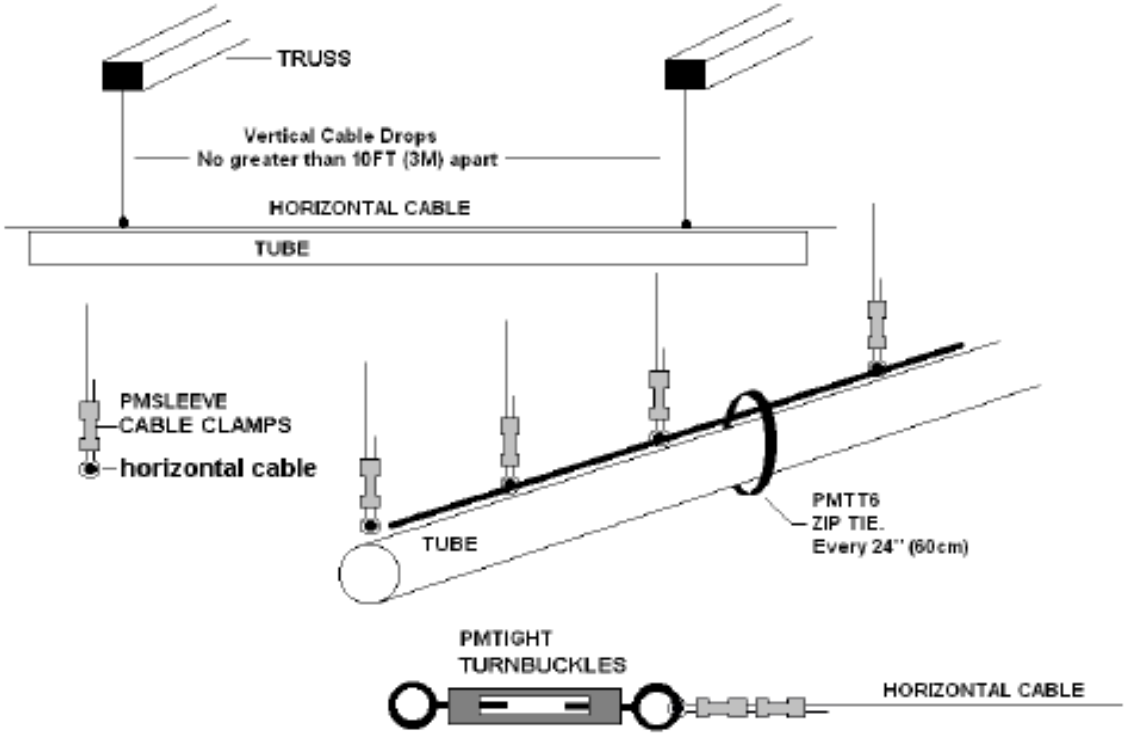

VERTICAL CABLE DROPS AND HORIZONTAL CABLE RUNS

Toll-free: 1-800-99VALCO
Phone: (+1) 419-678-8731
Fax: (+1) 419-678-2200

SENTRY PLUS

Automatic Disinfectant Delivery System & Components

Base Package

CATALOG #	ITEM DESCRIPTION	SHIP WEIGHT LBS.	SHIP WEIGHT KG.	LIST PRICE
814215	Sentry Plus System - 230V 60Hz Single Phase with Electric Eye Sensor *Includes: Pump, Controller, Filtration System, Nozzles, Hose, 2 Automatic Sensors, Chemical Injectors and Ramps*	14.6	6.64	

Sentry System should not be used in freezing temperatures. Should be installed in a heated structure or pump and hoses should be drained after every use if used in freezing temperatures.

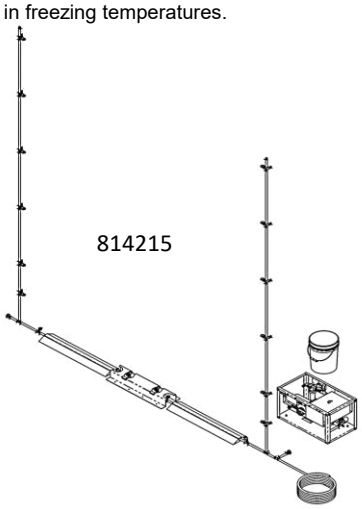

Accessories

		SHIP WEIGHT		LIST PRICE
814375	Sentry Plus Galvanized Frame Assembly 12' wide x 15' tall opening	142.0	64.41	
814365	Wand with 100' Hose Kit	17.7	8.03	
814380	Sentry Plus Top Nozzle Line Kit	4.0	1.81	

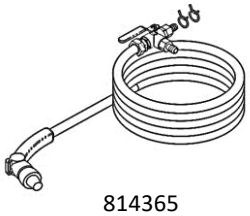

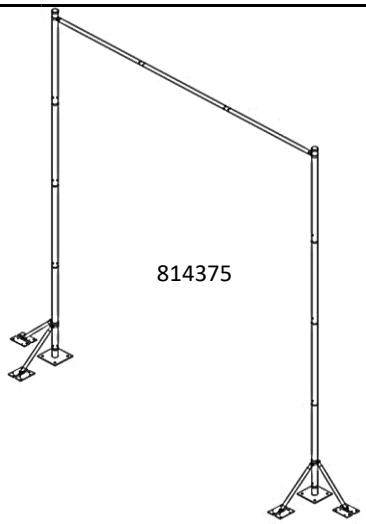

Replacement Parts

		SHIP WEIGHT		LIST PRICE
814366	Sentry Nozzle Guard	14.6	6.64	
814329	Sentry Ramp 38.5" long x 8.125" wide x 1.75" tall (2 per system)	13.1	5.96	
814350	Top Nozzle - Split Y 80 Degree	0.2	0.07	
814335	Side Nozzle - 110 Degree Dual Angle	0.1	0.04	
814330	Bottom Nozzle - 45 Degree Angle	0.1	0.03	
814354	50 Mesh replacement Nozzle Filter	0.0	0.00	
814403	50 Mesh replacement Strainer Filter	1.0	0.47	
814352	Replacement Hose by the Foot - 200 PSI EPDM	0.2	0.10	

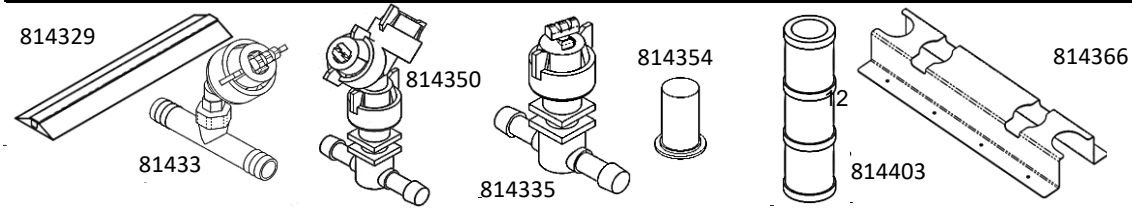

Weeden Sprinker System

International Sales Only

Contact Application Engineering for your personalized Quote

Quote@val-co.com

SECTION 35
OASIS RECIRCULATING PAD SYSTEM

IN THIS CATALOG SECTION

PAGE NUMBER	CONTENTS
35-02	How to Order an Oasis Recirculating Pad System
35-03	Oasis Systems
35-04	6" Cooling Pads
35-05 thru 35-06	Repair Parts

Toll-free: 1-800-99VALCO
Phone: (+1) 419-678-8731
Fax: (+1) 419-678-2200

OASIS RECIRCULATING PAD SYSTEM

HOW TO ORDER A OASIS RECIRCULATING PAD SYSTEM

1 Determine pad size & length of pad system. The height of your pad should be at least 1.5 feet (45.7cm) shorter than the sidewalls of the building. The length of the cooling pad area is determined by the CFM of the ventilation system - you should use 1 square foot of pad for every 350-400 CFM of air.

2. Select **Pump & Header Kit** - note that selection depends on length of pad system being under 40' or 40' to 80'.

3. Select one **End Cover Kit** per end fed system. **Or**
Select two **End Cover Kits** per center fed pad system.

4. Select quantity of 10' **Top & Bottom Assembly** (closed or open top) - always round up. (Example: If length of pad system is 45', order 5 - 10' top & bottoms.)

5. Select **Required Glue.**

6. Select **6" Pad** as needed from page 35-04

10' Long End-Fed EZ-Cool Recirculating Pad System Shown

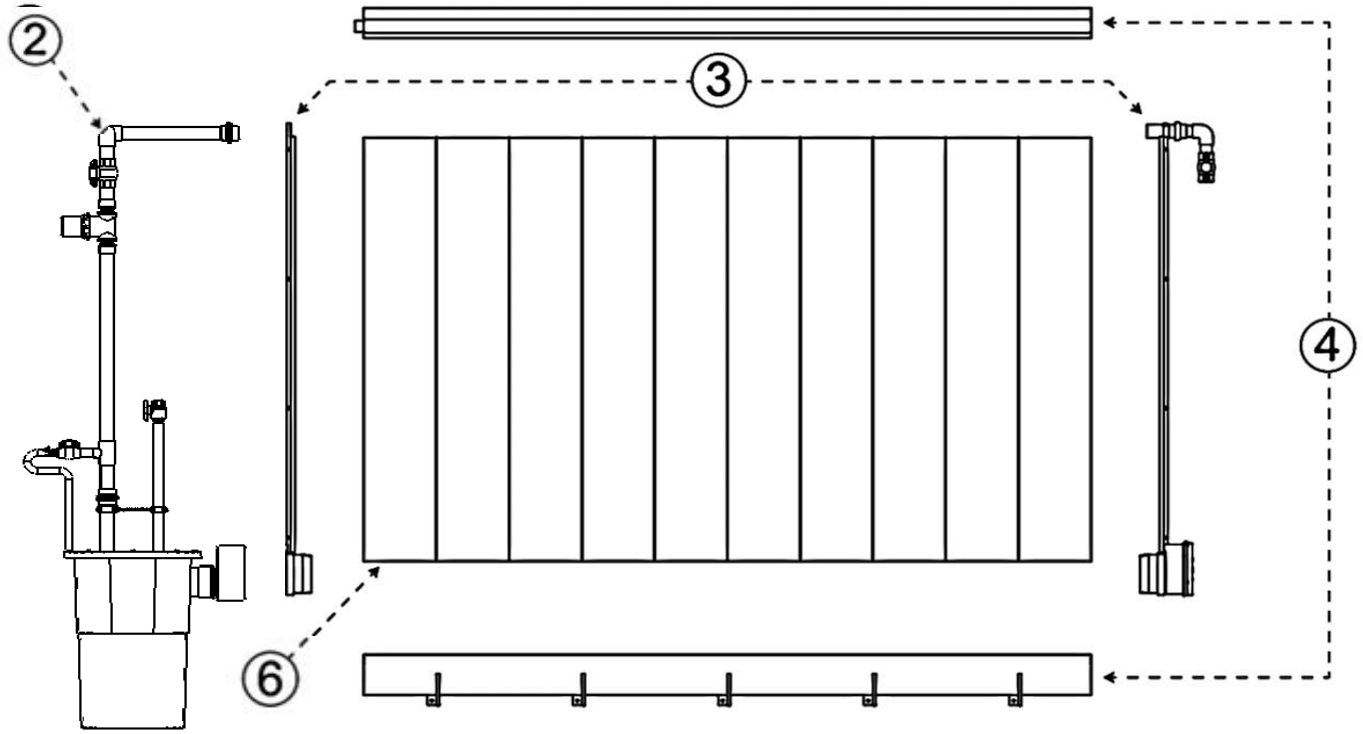

Toll-free: 1-800-99VALCO
Phone: (+1) 419-678-8731
Fax: (+1) 419-678-2200

OASIS PRESSURE RECIRCULATING PAD SYSTEMS

2a. OASIS SYSTEM COMPONENTS - PUMP & HEADER KITS

CATALOG #	ITEM DESCRIPTION	SHIP WEIGHT LBS.	SHIP WEIGHT KG.	LIST PRICE
813041	Basin With 60 GPM, 60 Hz., 1PH, 230v Pump & Header Kit - For End Fed Systems up to 80'	38.4	17.4	
813043	Basin With 60 GPM, 60 Hz., 1PH, 230v Pump & Header Kit - For Center Fed Systems up to 80'	44.4	20.1	
813045	Basin With 60 GPM, 50 Hz., 1PH, 230v Pump & Header Kit - For End Fed Systems up to 80'	36.7	16.6	
813047	Basin With 60 GPM, 50 Hz., 1PH, 230v Pump & Header Kit - For Center Fed Systems up to 80'	43.0	19.5	
813049	Basin With 30 GPM, 60 Hz., 1PH, 115v Pump & Header Kit - For End Fed Systems up to 40'	35.0	15.9	

2b. OASIS-E™ SYSTEM COMPONENTS - PUMP & HEADER KITS

813136	Rectangular Tank w/ 60 GPM, 60 Hz., 1PH, 1150v Pump & Header Kit - For End Systems up to 80'	97.9	44.4	
813139	Rectangular Tank w/ 60 GPM, 60 Hz., 1PH, 1150v Pump & Header Kit - For Mid Fed Systems up to 80'	74.4	33.7	

3. OASIS SYSTEM COMPONENTS - END COVER KITS

CATALOG #	ITEM DESCRIPTION	SHIP WEIGHT LBS.	SHIP WEIGHT KG.	LIST PRICE
PAEC6	End Cover Kit, - Flush Mount - for 6 ft (maximum) Pad Height	9.2	4.2	
813025	End Cover Kit, Flush Mount - for 2 Meter Pad Height	9.8	4.4	

4. TOP & BOTTOM ASSEMBLIES

CATALOG #	ITEM DESCRIPTION	SHIP WEIGHT LBS.	SHIP WEIGHT KG.	LIST PRICE
813102	Kit of Top & Bottom Assembly for 10' of 6" System Flush Mount - Closed Top	45.0	20.4	
813058	Kit of Top & Bottom Assembly for 10' of 6" System Flush Mount - Open Top	45.3	20.5	

ADD-ON KITS

CATALOG #	ITEM DESCRIPTION	SHIP WEIGHT LBS.	SHIP WEIGHT KG.	LIST PRICE
813001	Corner Wrap-around Kit - Flush Mount	67.0	30.4	
813007	Float Switch	2.3	1.1	

5. REQUIRED GLUE

CATALOG #	ITEM DESCRIPTION	SHIP WEIGHT LBS.	SHIP WEIGHT KG.	LIST PRICE
VG126	Extra Heavy Body Glue - 1 Gallon	8.8	4.0	
VG127	Extra Heavy Body Glue - 10.3 ounces	0.7	0.3	

Toll-free: 1-800-99VALCO
Phone: (+1) 419-678-8731
Fax: (+1) 419-678-2200

6" POLAIR COOLING PADS

CATALOG NUMBER	PAD SIZE (INCHES)	DESCRIPTION/FLUTING	SQ. FT. PER PAD	SHIPPING - PADS PER				LIST PRICE
				FULL TRUCKLOAD	20' CONTAINER	40' REGULAR CONTAINER	40' HI-CUBE CONTAINER	
813104	6 x 24 x 48	With Edge Guard 45°/15°	4	750	220	465	524	
813105	6 x 24 x 60	With Edge Guard 45°/15°	5	600	174	370	420	
813106	6 x 24 x 72	With Edge Guard 45°/15°	6	500	155	310	354	

Obsolete Pads - limited quantities

PA6AR1260ED	**6 x 12 x 60**	**With Edge Guard 30°/30°**	**5**	**1200**	**348**	**740**	**840**	
PA6AR2460ED	**6 x 24 x 60**	**With Edge Guard 30°/30°**	**10**	**600**	**174**	**370**	**420**	
PA6CR2436ED	**6 x 24 x 36**	**With Edge Guard 45°/15°**	**6**	**1000**	**310**	**620**	**708**	

Toll-free: 1-800-99VALCO
Phone: (+1) 419-678-8731
Fax: (+1) 419-678-2200

OASIS & EZ-COOL RECIRCULATING PAD SYSTEM REPAIR PARTS

REPAIR PARTS

CATALOG #	ITEM DESCRIPTION	SHIP WEIGHT LBS.	SHIP WEIGHT KG.	LIST PRICE
011230	Stud, 1/4-20 X 6", 316 SS	0.1	0.0	
813004	Bracket, 1.5" Pipe, Flush Mount	0.2	0.1	
813005	Bracket, 1.5" Pipe, Extended Mount	0.5	0.2	
813008	Aluminum Cover, Closed Top, 10' Long	15.5	7.0	
813009	PVC Pipe, 8" SDR-35, 10.5" Long	7.8	3.5	
813011	Flexible 8" PVC Cap	1.3	0.6	
813013	PVC Pipe, 8" SDR-35, 39.5" Long	8.8	4.0	
813017	Mounting Bracket, Header Kit, Flush Mount	2.7	1.2	
813019	Mounting Bracket, Header Kit, Extended Mount	5.7	2.6	
813021	3/4" PVC Pipe Adapter, Male Socket, Male NPT	0.0	0.0	
813023	3/4" Plain PVC Pipe, 3" Long	0.0	0.0	
813026	Alum. End Cover For 2 Meter Pad, Flush Mount	2.3	1.0	
813029	8" PVC Trough, 10' Long, Standard Duty	21.0	9.5	
813030	Adapter, PVC, 4", Socket, MPT	0.9	0.4	
813031	Elbow, PVC, 4", Street, DWV	1.4	0.6	
813032	Cap, Adapter, PVC, 8" X 4"	2.1	1.0	
813033	Basin, Plastic, 18" X 30"	8.4	3.8	
813035	Cover, Basin, 18"	1.4	0.6	
813036	Seal, Pipe, Flexible, 4"	0.3	0.1	
813039	Tee, PVC, 4", Socket	2.3	1.0	
813053	Clamp, Pipe, 1-5/16", SS	0.1	0.0	
813054	Clamp, Pipe, 1-7/8", SS	0.2	0.1	
813060	55 GPM Submersible Pump, 1 PH, 50 HZ, 220-240V	15.0	6.8	
820000	Pipe, 1" X 24" Long, MNPT, Schd 80 PVC	0.8	0.4	
820001	Ball Valve, 1" FNPT, Schd 80 PVC	0.3	0.2	
PAA15	1 1/2" PVC Male Adapter, MIPT X Slip	0.1	0.1	
PAA16	1 1/4" MIPT x 1 1/2" SLIP PVC Male Reducing Adapter	0.0	0.0	
PAA17	1 1/2" PVC Female Adapter, 1 1/2" FNPT x 1 1/2" Slip	0.1	0.0	
PAA90	8" PVC Right Angle 90 Degree, Elbow	5.3	2.4	
PAB149	1/4"-20 X 1" SS Bolt	0.0	0.0	
PAB250	Trough Bracket, Flush Mount	0.5	0.2	
PAB25010	Trough Bracket, Extended Mount	1.8	0.8	
PAB700	Galvanized Wire Pipe Bracket, For 1 1/2" Pipe	0.1	0.0	
PABV15	1-1/2" PVC Ball Valve	0.8	0.3	
PAC607	Open Top Aluminum Pad Cover, 10' Long	10.1	4.6	
PAC608	Open Top Pad Retainer, 10' Long	3.5	1.6	
PAC609	Open Top Pipe Bracket, For 1 1/2" Pipe	0.2	0.1	
PAC8	8" SDR35 PVC Cap	3.0	1.4	

Toll-free: 1-800-99VALCO
Phone: (+1) 419-678-8731
Fax: (+1) 419-678-2200

OASIS & EZ-COOL RECIRCULATING PAD SYSTEM REPAIR PARTS

REPAIR PARTS

CATALOG #	CATALOG #	ITE	SHIP WEIGHT LBS.	SHIP WEIGHT KG.	LIST PRICE
PAC800	Alum. End Cover For 6" Pad, Flush Mount		2.0	0.9	
PAC80010	Alum. End Cover For 6" Pad, Extended Mount		4.0	1.8	
PAC8HUB	8" Clean-Out Hub		2.0	0.9	
PAC8PLUG	8" Clean-Out Plug		1.1	0.5	
PACROD	Seal Between Trough And Wall, 10' Long		1.0	0.5	
PAE500	Alum Top Extrusion For 6" Pad, 10' Long		7.1	3.2	
PAEA17510	8" Extended Top Adapter Plate		34.0	15.4	
PAEZEXT	Extender Plate For EZ Trough		13.8	6.3	
PAF150HF	Float Valve, I" FNPT		0.7	0.3	
PAF150K	Float Kit, Water Inlet, 1"FNPT		2.1	1.0	
PAF200	Line Filter For Recirculating		1.0	0.5	
PAFB150	Bracket For Float Valve, No Hardware		0.2	0.1	
PAN150	1/4"-20 Stainless Steel Nut		0.0	0.0	
PAP150DS	1-1/2" PVC Pipe With 7/64" Holes Every 3"		4.0	1.8	
PAP30	30 GPM Submersible Pump, 115V, 60Hz, 1Ph, SS		9.5	4.3	
PAP60	60 GPM Submersible Pump, 230V, 60Hz, 1Ph, SS		14.8	6.7	
PAP60-50	60 GPM Submersible Pump, 230V, 50Hz, 1Ph, SS		14.2	6.4	
PAP8	PVC Pipe, 8" SDR-35, 10' Long With Belled End		45.0	20.4	
PAP860	Coupler For Pap800WT		1.0	0.4	
PAP865	End Adapter For Pap800WT		1.4	0.6	
PAS150	1-1/2" Pipe Strap		0.1	0.0	
PAS250	Screw, #12 X 1 1/2" Self-Drilling, SS Hex Washer Head		0.0	0.0	
PAT340	1 1/2" X 1 1/2" X 3/4" Reducing Tee		0.2	0.1	
PAT8	8" SDR35 PVC Tee		8.0	3.6	
PAX8	8" SDR35 PVC Cross		8.0	3.6	
PM4596K14	Sch 80 PVC 1", 90 Deg Elbow, Threaded		0.2	0.1	
PM4882K3	Sch 80 1" Nipple X 2" Long PVC		0.1	0.0	
VG126	Extra Heavy Body Cement, 1 Gallon		8.8	4.0	
VG127	Extra Heavy Body Cement, 10.3 Oz		0.7	0.3	
VRP500	1/2" Hose Clamp, Use With VRP77		0.0	0.0	
VRP71	1/2" Threaded Male Hose Connector (1/2" Barb)		0.0	0.0	
VRP77	1/2" Id Yellow Drop Hose, Per Foot		0.1	0.1	
VT107	3/4" Male Slip X 1/2" FPT PVC Bushing		0.0	0.0	
VT194	1 1/2" Plain PVC Pipe, 10' Long		3.4	1.5	
VT198	1 1/2" PVC Coupler		0.2	0.1	
VT199	1 1/2" PVC Tee, Schedule 40		0.4	0.2	
VT200	1 1/2" 90 Degree PVC Elbow, Schedule 40		0.3	0.1	
VV801	3/4" Ball Valve, Schedule 80		0.3	0.1	
VX150	1 1/2" PVC Union		0.7	0.3	

Toll-free: 1-800-99VALCO
Phone: (+1) 419-678-8731
Fax: (+1) 419-678-2200

SECTION 38
POLAIR EVAPORATIVE COOLING PADS

IN THIS CATALOG SECTION

PAGE NUMBER	CONTENTS
SEE SECTION 35 FOR COOLING PADS	

SECTION 38
POLAIR EVAPORATIVE COOLING PADS

this page intentionally left blank

SECTION 39

HEATRITE

BROODERS

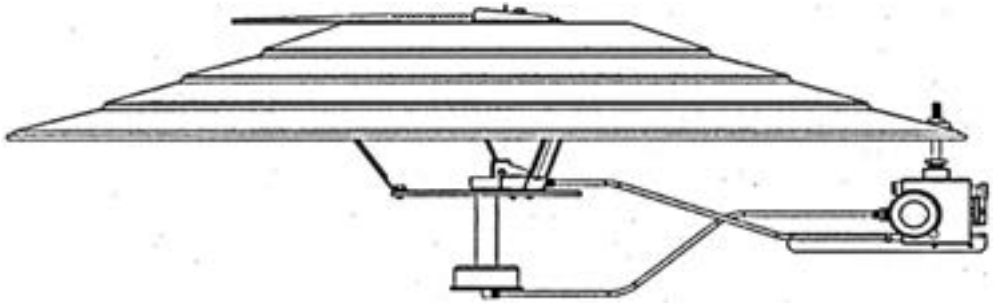

IN THIS CATALOG SECTION

PAGE NUMBER	CONTENTS
39-02	Brooder Styles
39-03	**Glow Radiant (VGR) Brooders** With S.I.T. Snap Action Control With R.S. Zone Control With Direct Spark Control Zone Control Panels
39-04	**Aurora IR™ Low Profile Brooders** With S.I.T. Snap Action Control With R.S. Zone Control With Direct Spark Control With Direct Spark Control High Pressure Zone Control Panels

REPAIRS

SEE REPAIR LISTING & REFERENCE MATERIAL IN SEPARATE CATALOG

SECTION 39

HEATRITE BROODERS

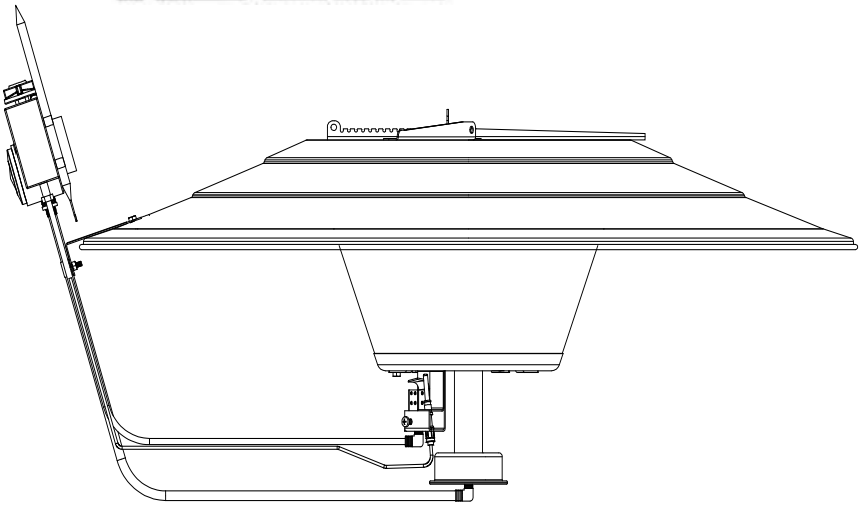

VGR GLOW RADIANT BROODER
(SHOWN WITH 3' CANOPY)

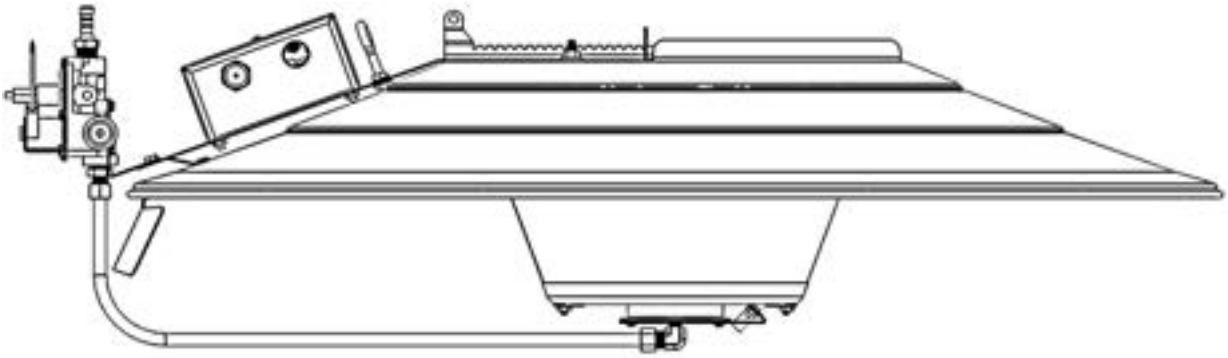

Aurora™ Low Profile Radiant Brooder

Toll-free: 1-800-99VALCO
Phone: (+1) 419-678-8731
Fax: (+1) 419-678-2200

GLOW RADIANT BROODERS

HOW TO ORDER

Venturi Jet Brooders must be ordered by individual components.

For each complete brooder, select and order one each **CONTROL ASSEMBLY** and one each **CANOPY.**

To order control assemblies for use with natural gas fuel, use the catalog number in italics to the right of the description

Use of control panel is required with RS 7000ELC Zone and Direct Spark Ignition Controls.

One 470650 Zone Control Panel can accommodate up to 25 Direct Spark Ignition brooders or 30 RS 7000 ELC Zone Brooders

SIT SNAP ACTION

CONTROL ASSEMBLY

CATALOG NUMBER	ITEM DESCRIPTION	*NATURAL GAS CATALOG NO.*	SHIPPING WEIGHT LBS.	SHIPPING WEIGHT KG.	LIST PRICE
470459	VGR SS LP 40K 3 DOM TV	*470460*	13.8	6.2	
470459-52	VGR SS LP 40K 3 DOM TV - INTL *For use at altitudes > 3300 ft (1000m)*	*n/a*	19.0	8.6	

RS 7000 ELC ZONE

CONTROL ASSEMBLY

CATALOG NUMBER	ITEM DESCRIPTION	*NATURAL GAS*	SHIPPING WEIGHT LBS.	SHIPPING WEIGHT KG.	LIST PRICE
470467	VGR RZ LP DOM TV	*470468*	14.0	6.4	

DIRECT SPARK IGNITION

CONTROL ASSEMBLY

CATALOG NUMBER	ITEM DESCRIPTION	*NATURAL GAS*	SHIPPING WEIGHT LBS.	SHIPPING WEIGHT KG.	LIST PRICE
470473	VGR WD LP 40K 3 DOM NO	*470474*	18.0	8.1	

Brooders - Butane

CATALOG NUMBER	ITEM DESCRIPTION	SHIPPING WEIGHT LBS.	SHIPPING WEIGHT KG.	LIST PRICE
470560	VGR Butane 40K 11" W.C. 24VAC	19.0	8.6	
470561	VGR Butane 40K Non-Electric	14.1	6.4	

CANOPY

CATALOG NUMBER	ITEM DESCRIPTION	SHIPPING WEIGHT LBS.	SHIPPING WEIGHT KG.	LIST PRICE
470001	3' Galvanized Canopy	8.0	3.6	
470778	3' Aluminum Canopy	3.1	1.4	

ZONE CONTROL PANELS

FOR RS 7000ELC ZONE & DIRECT SPARK IGNITION CONTROLS

CATALOG NUMBER	ITEM DESCRIPTION	SHIPPING WEIGHT LBS.	SHIPPING WEIGHT KG.	LIST PRICE
470650	Zone Control Panel (115VAC Input) - Includes 24 Volt Transformer - Generator Back-Up Required - Requires dry-contact signal from thermostat or controller to activate brooders	19.4	8.8	
470781	Zone Control Panel (230VAC Input) - Includes 24 Volt Transformer - Generator Back-Up Required - Requires dry-contact signal from thermostat or controller to activate brooders	10.2	4.6	

HEATRITE AURORA IR™ LOW PROFILE RADIANT BROODERS

HOW TO ORDER

Order the part number to receive the brooder completely assembled including canopy.

Part numbers with "KD" are unassembled and packaged two per carton.

Use of control panel is required with RS 7000ELC Zone and Direct Spark Ignition Controls.

One 470650 Zone Control Panel can accommodate up to 25 Direct Spark Ignition brooders or 30 RS 7000 ELC Zone Brooders

SIT SNAP ACTION Aurora Low Profile

CATALOG NUMBER	ITEM DESCRIPTION	*NATURAL GAS*	SHIPPING WEIGHT LBS.	SHIPPING WEIGHT KG.	LIST PRICE
470824	Low Profile, 40K, **Alum. Canopy**, SIT, LP	*470823*	22.3	6.4	
470824-KD-Q2	470824 Unassembled, 2 per carton*	*Not Available*	29.3	13.2	
470850	Low Profile, 40K, **Galv. Canopy**, SIT, LP	*470849*	22.0	9.8	
470873-KD-Q2	Low Profile, 40K, **Alum. Canopy**, SIT, LP *High Altitude LP/Butane model for use at >3,300 ft (1,000m)*	*Not Available*	29.3	13.2	

RS 7000 ELC ZONE Aurora Low Profile

CATALOG NUMBER	ITEM DESCRIPTION	*NATURAL GAS*	SHIPPING WEIGHT LBS.	SHIPPING WEIGHT KG.	LIST PRICE
470827	Low Profile, 40K, **Alum Canopy**, Zone, LP	*470826*	14.2	6.4	
470827-KD-Q2	470827 Unassembled, 2 per carton*	*Not Available*	29.3	13.2	
470852	Low Profile, 40K, **Galv Canopy**, Zone, LP	*470851*	21.7	9.8	

DIRECT SPARK IGNITION Aurora Low Profile

CATALOG NUMBER	ITEM DESCRIPTION	*NATURAL GAS*	SHIPPING WEIGHT LBS.	SHIPPING WEIGHT KG.	LIST PRICE
470829	Low Profile, 40K, **Alum Canopy**, DSI, LP	*470828*	24.0	7.1	
470829-KD-Q2	470829 Unassembled, 2 per carton*	*Not Available*	32.6	14.5	
470854	Low Profile, 40K, **Galv Canopy**, DSI, LP	*470853*	29.2	10.5	
470875-KD-Q2	Low Profile, 40K, **Alum. Canopy**, DSI, LP *High Altitude LP/Butane model for use at >3,300 ft (1,000m)*	*Not Available*	32.5	13.2	

***KD Brooders are packed two per carton*. Ordering a "quantity of one" of each "KD" part number will result in two brooders shipped in a carton. Cartons will not be broken! All orders will need to be for multiples of two brooders.**

DIRECT SPARK IGNITION Aurora Low Profile *HIGH PRESSURE*

CATALOG NUMBER	ITEM DESCRIPTION	*NATURAL GAS*	SHIPPING WEIGHT LBS.	SHIPPING WEIGHT KG.	LIST PRICE
470822	Low Profile, 40K, **Alum Canopy**, DSI, 5 psi, LP	*470821*	23.5	7.1	
470848	Low Profile, 40K, **Galv Canopy**, DSI, 5 psi, LP	*470847*	22.8	7.1	

ZONE CONTROL PANELS

FOR RS 7000ELC ZONE & DIRECT SPARK IGNITION CONTROLS

CATALOG NUMBER	ITEM DESCRIPTION	SHIPPING WEIGHT LBS.	SHIPPING WEIGHT KG.	LIST PRICE
470650	Zone Control Panel (115VAC Input) - Includes 24 Volt Transformer - Generator Back-Up Required - Requires dry-contact signal from thermostat or controller to activate brooders	19.4	10.0	
470781	Zone Control Panel (230VAC Input) - Includes 24 Volt Transformer - Generator Back-Up Required - Requires dry-contact signal from thermostat or controller to activate brooders	10.2	4.6	

Toll-free: 1-800-99VALCO
Phone: (+1) 419-678-8731
Fax: (+1) 419-678-2200

SECTION 40
RADIANT TUBE HEATERS

IN THIS CATALOG SECTION	
PAGE NUMBER	**CONTENTS**
40-02	SRP Tube Heaters
40-03	Tube Heaters
40-04 thru 40-08	Tube Heater Kit Components
40-09	Burner Units

REPAIRS

SEE REPAIR LISTING & REFERENCE MATERIAL IN SEPARATE CATALOG

Toll-free: 1-800-99VALCO
Phone: (+1) 419-678-8731
Fax: (+1) 419-678-2200

SINGLE FIRE RADIANT TUBE HEATERS

CATALOG NUMBER	ITEM DESCRIPTION	SHIPPING WEIGHT		LIST PRICE
		LBS.	KG.	
477000	Tube Heater, 80K BTU, LP, 20', 1 Stage, SRP	127.5	57.8	
477001	Tube Heater, 80K BTU, NG, 20', 1 Stage, SRP	127.5	57.8	
477002	Tube Heater, 100K BTU, LP, 20', 1 Stage, SRP	127.5	57.8	
477003	Tube Heater, 100K BTU, NG, 20', 1 Stage, SRP	127.5	57.8	

International Sales Only

477010	Tube Heater, 100K BTU, LP, 40', 1 Stage, 230V, 50HZ, SRP	224.41	101.8	

Toll-free: 1-800-99VALCO
Phone: (+1) 419-678-8731
Fax: (+1) 419-678-2200

"VES" SINGLE FIRE RADIANT TUBE HEATERS

FOR USE IN USA & CANADA ONLY

"VES" Single Fire Tube Heaters

CATALOG NUMBER	ITEM DESCRIPTION	SHIPPING WEIGHT LBS.	SHIPPING WEIGHT KG.	LIST PRICE
474800	Tube Heater, VES, 80K BTU, LP, 20', DSI	111	50.3	
474801	Tube Heater, VES, 80K BTU, NAT, 20', DSI	111	50.3	
474802	Tube Heater, VES, 100K BTU, LP, 30', DSI	145	65.8	
474803	Tube Heater, VES, 100K BTU, NAT, 30', DSI	145	65.8	
474804	Tube Heater, VES, 125K BTU, LP, 40', DSI	186	84.4	
474805	Tube Heater, VES, 125K BTU, NAT, 40', DSI	186	84.4	
474806	Tube Heater, VES, 150K BTU, LP, 50', DSI	231	104.8	
474807	Tube Heater, VES, 150K BTU, NAT, 50', DSI	231	104.8	
EXPW10ALUM	10' Extension Kit, includes tube, reflector and hangers	52	23.6	

"VES" Single Fire U-Tube Heaters

474808	Tube Heater, VES, U-Tube, 80K BTU, LP, 20', DSI	130	59.0	
474809	Tube Heater, VES, U-Tube, 80K BTU, NAT, 20', DSI	654	296.6	

TUBE HEATERS - Stainless Steel

474202	Tube Heater, Sentry, 60K BTU, LP, 30', Calorized Tube	140	63.5	
474203	Tube Heater, Sentry, 60K BTU, NG, 30', Calorized Tube	140	63.5	

Toll-free: 1-800-99VALCO
Phone: (+1) 419-678-8731
Fax: (+1) 419-678-2200

KIT COMPONENTS Non-SRP
MODULATING RADIANT TUBE HEATERS

COMPONENT REQUIREMENTS FOR MODULATING TUBE HEATER KITS

TUBE HEATER KIT NUMBER →

COMPONENT CATALOG NUMBER	COMPONENT DESCRIPTION	REQUIRED QUANTITY					
		VM80P/N-20A	VM80P/N-30A	VM115P/N-30A	VM115P/N-40A	VM150P/N-40A	VM150P/N-50A
See Below	Modulating Burner Unit	1	1	1	1	1	1
03051101	Burner Tube 60,000 BTU & Higher	1	1	1	1	1	1
91409408	Tube, Aluminized, Heat Treated, 16 Gauge., 10' (3m) - 4" (100mm) Diameter	1	2	2	3	3	4
01312700	Coupling, Plain - 4" (100mm) Diameter Stainless Steel	1	2	2	3	3	4
01318901	Tube Clamp Package (Includes Clamps, Nut, Washer, Bolt)	1	1	1	1	1	1
02750303	8' Standard Reflector	3	4	4	6	6	7
02750800	Reflector End Cap	2	2	2	2	2	2
03090100 03090101	Tube & Reflector Hanger - OR - Tube & Reflector Hanger - Wide Pattern	3	4	4	5	5	6
03050000 03050001	* Reflector Support Strap - OR - ** Reflector Support Strap - Wide Pattern	2	3	3	5	5	6
91908004	* ** Wire Form Hanger	2	3	3	5	5	6
94320812	* ** Screw for Reflector Support	4	6	6	10	10	12
91907302	S-Hook	3	4	4	5	5	6
91107720	U-Clip Package (20 Clips Per Package)	1	1	1	1	1	2
90502700	Vent Adapter - 4" (100mm) Diameter	1	1	1	1	1	1

** These items may be ordered as 03050010 Reflector Support Package.*

*** These items may be ordered as 03050011 Reflector Support Package - Wide Pattern.*

VM BURNER UNITS - LP GAS

CATALOG NO.	FOR TUBE HEATER KIT
VM34080LP	VM80P-20A & 30A
VM34150LP	VM150P-40A & 50A

VM BURNER UNITS - NATURAL GAS

CATALOG NO.	FOR TUBE HEATER KIT
VM34080NG	VM80N-20A & 30A
VM34115NG	VM115N-30A & 40A
VM34150NG	VM150N-40A & 50A

SEE COMPONENT PRICING ON PAGES 40-07 THRU 40-08

Toll-free: 1-800-99VALCO
Phone: (+1) 419-678-8731
Fax: (+1) 419-678-2200

TUBE HEATER COMPONENT PRICING

SEE COMPONENT PRICING ON PAGE 40-06 through 40-09

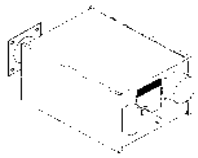

BURNER UNIT
Shown with tube gasket.
Must be installed with the flame observation window facing down.

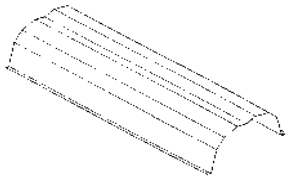

REFLECTOR
Alternate overlap of reflectors. See instructions for proper overlap measurement - minimum overlap is 9" (23cm).

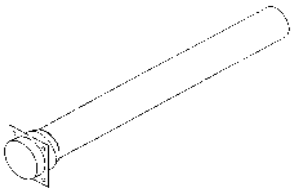

BURNER TUBE
Supplied in 10' length. Burner tube is always the first tube after the burner.

REFLECTOR END CAP
Punch out center section to accommodate tube. Attach with provided U-Clips.

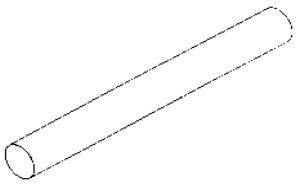

TUBE
Supplied in 10' length. Does not attached to burner.

TUBE & REFLECTOR HANGER WITH CLAMP
Position this hanger no more than 4" (10cm) away from the burner unit. Suspend from "S" hook.

COUPLER
Used for tube to tube connections

VENT ADAPTER
Adapter is used to connect the last heat exchange tube to the vent system. Install adapter with seam on top.

TUBE & REFLECTOR HANGER
Suspend the system from these hangers. Minimum of one required per 10' tube. Suspend from "S" hook.

VENT SLEEVE

TURBULATOR

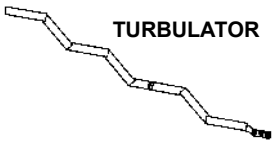

REFLECTOR SUPPORT PACKAGE
One required at every reflector overlap. The support closest to the burner and every other support after should have the screws loosened approximately 1/16" (2mm) to allow for reflector slippage.

FLEXIBLE GAS LINE

FLEXIBLE BOOT

Toll-free: 1-800-99VALCO
Phone: (+1) 419-678-8731
Fax: (+1) 419-678-2200

TUBE HEATER ACCESSORY & COMPONENT PRICING

TUBE HEATER KIT COMPONENTS (Non-SRP)

CATALOG NUMBER	ITEM DESCRIPTION	SHIPPING WEIGHT		LIST PRICE
		LBS.	KG.	
474932	Outside Air Inlet Kit; 4"	5	2.3	
90502403	Outside Air Inlet Kit; 5" (VTF Tube Heater Only)	0	0	
03051601	Burner Tube - 40,000 BTU Only - Heat Treated (VST & VM Only)	30.0	13.6	
03051101	Burner Tube - 60,000 BTU & Higher - Heat Treated (VST & VM Only)	30.0	13.6	
91409408	10' (3m) Tube, Aluminized, Heat Treated, 16 Gauge., 4" (100mm) Diameter	27.0	12.2	
91409408-19B	Bundle of 19 - 91409408 Tubes	513.0	232.7	
01312700	Tube Coupling - 4" (100mm) Diameter - Stainless Steel	1.0	0.5	
01312700-30P	Tube Coupling - 4" (100mm) Diameter - SS (Package of 30)	33.0	15.0	
01318901	Tube Clamp Package (Includes Clamps, Nut, Washer, Bolt)	0.9	0.4	
02750303	8' Standard Reflector	5.0	2.3	
02750303-20P	Package of 20 - 02750303 8' Standard Reflectors	106.0	48.1	
02750800	Reflector End Cap	1.0	0.5	
02750800-50P	Package of 50 - 02750800 Reflector End Caps	50.0	22.7	
03090100	Tube & Reflector Hanger	1.0	0.5	
03090100-30P	Package of 30 - 03090100 Tube & Reflector Hangers	34.0	15.4	
03090101	Tube & Reflector Hanger - Wide Pattern	27.0	12.2	
03050010	Reflector Support Package (Includes Strap, Wire Form & 2 Screws)	1.0	0.5	
03050010-100P	Package of 100 - 03050010 Reflector Support Packages	30.0	13.6	
03050011	Reflector Support Package - Wide Pattern (Includes Strap, Wire Form & 2 Screws)	1.0	0.5	
03050000	Strap Only for Reflector Support	5.0	2.3	
91908004	Wire Form Hanger Only for Reflector Support	0.0	0.0	
94320812	Screw Only for Reflector Support	0.0	0.0	
91907302	S-Hook	0.0	0.0	
91107720	U-Clip Package	1.0	0.5	
90502300	Outdoor vent cap, 4"	2.0	0.9	
474095	4" Terminal elbow vent with screen	3.0	1.4	
0302080A	Burner Side Door VST Tube Heater Blower Side	2.0	0.9	
90502700	Vent Adapter - 4" (100mm) Diameter	1.0	0.5	

Toll-free: 1-800-99VALCO
Phone: (+1) 419-678-8731
Fax: (+1) 419-678-2200

TUBE HEATER (Non-SRP) ACCESSORY & COMPONENTS

TUBE HEATER VES - COMPONENTS

CATALOG NUMBER	ITEM DESCRIPTION	SHIPPING WEIGHT		LIST PRICE
		LBS.	KG.	
91201708	PIPE NIPPLE BLACK 1/2" NPT X 4"	0.0	0.0	
91317300	THERMOSTAT JUMPER	0.0	0.0	
91412200	FLX GAS LN/SHT OFF COCK,1/2"ID	2.0	0.9	
91412204	3/4"FLEX GAS LINE & SHUTOFF	3.0	1.4	

TUBE HEATER VES - Standard Core and Extension Packages

91409408	10'/ALUMINUM HEAT TREATED/ 16GA./4" DIAMETER	27.0	12.2	
474833	BURNER TUBE, 10', VES	30.0	13.6	
02750303	Reflector (aluminum)	5.0	2.3	
02750800	REFLECTOR END CAP (ALUMINUM)	1.0	0.5	
03090101	TUBE & REFLECTOR HANGER - WIDE	27.0	12.2	
91907302	"S" HOOK	0.0	0.0	
03050011	REFLECTOR SUPPORT PACKAGE - WP	1.0	0.5	
91107720	U-CLIP PACKAGE (20 PCS)	1.0	0.5	
03090101	TUBE & REFLECTOR HANGER - WIDE	27.0	12.2	
01318901	TUBE CLAMP PACKAGE	0.9	0.4	

TUBE HEATER VES - High Efficiency Core and Extension Packages

91409408	10'/ALUMINUM HEAT TREATED/ 16GA./4" DIAMETER	27.0	12.2	
474833	BURNER TUBE, 10', VES	30.0	13.6	
01312700	COUPLING (PLAIN/SS/4"DIAMETER)	1.0	0.5	
474884	REFLECTOR, HIGH EFF, ALUM, 8'	6.1	2.8	
474885	END, CAP, REFLECTOR, HIGH EFF ALUMINUM	2.0	0.9	
474886	HANGER, TUBE & REFLECTOR HIGH EFF, 4"	1.3	0.6	
474886	HANGER, TUBE & REFLECTOR HIGH EFF, 4"	1.3	0.6	
474887	SUPPORT KIT, REFLECTOR HIGH EFF	0.4	0.2	
91107720	U-CLIP PACKAGE (20 PCS)	1.0	0.5	
474888	CLAMP PACKAGE, TUBE HIGH EFF	1.3	0.6	

TUBE HEATER VBH - Linear Standard Parts

474586	FAN KIT, VBH, BH35	11.5	5.2	
474889	LINEAR PACKAGE, TUBE HEAT VBH	0.5	0.2	
474890	BURNER TUBE, VBH, 3048MM VBH	30.0	13.6	
91409408	10'/ALUMINUM HEAT TREATED/ 16GA./4" DIAMETER	27.0	12.2	
474891	FAN TUBE, VBH, 3048MM WITH SWIRLER	30.0	13.6	
01312700	COUPLING (PLAIN/SS/4"DIAMETER)	1.0	0.5	
02750303	REFLECTOR, ALUMINUM	5.0	2.3	
02750800	REFLECTOR END CAP (ALUMINUM)	1.0	0.5	
03090100	TUBE AND REFLECTOR HANGER	1.0	0.5	
01318901	TUBE CLAMP PACKAGE	0.9	0.4	
91908004	WIRE FORM HANGER	0.0	0.0	
94320812	SCREW FOR REFLECTOR SUPPORT	0.0	0.0	
474892	SUPPORT STRAP, REFLECTOR, VBH	2.1	1.0	
91107720	U-CLIP PACKAGE (20 PCS)	1.0	0.5	

TUBE HEATER (Non-SRP) ACCESSORY & COMPONENTS

TUBE HEATER VHED - Burner Parts

CATALOG NUMBER	ITEM DESCRIPTION	SHIPPING WEIGHT LBS.	SHIPPING WEIGHT KG.	LIST PRICE
474820	GASKET, TUBE, VES	0.1	0.0	
474880	VENT CAP, COMBUSTION AIR WEATHER	1.0	0.5	
91317300	THERMOSTAT JUMPER	0.0	0.0	
474831	GAS HOSE, FLEXIBLE, STAINLESS 3/4" NPT	3.0	1.4	
474847	ADAPTER, TURBULATOR, TUBE HEAT	1.0	0.5	
474832	TURBULATOR, 2.5', ALUMINIZED	3.0	1.4	

TUBE HEATER VHED - Standard Core and Extension Packages

91409408	10'/ALUMINUM HEAT TREATED	27.0	12.2	
474833	BURNER TUBE, 10', VES	30.0	13.6	
01312700	COUPLING (PLAIN/SS/4"DIAMETER)	1.0	0.5	
02750303	REFLECTOR, ALUMINUM	5.0	2.3	
02750800	REFLECTOR END CAP (ALUMINUM)	1.0	0.5	
474879	HANGER, TUBE & REFLECTOR, 4" TUBE HEATER, VHED	1.3	0.6	
91907302	"S" HOOK	0.0	0.0	
91107720	U-CLIP PACKAGE (20 PCS)	1.0	0.5	
90502700	FLUE ADAPTER - 4" (100MM) DIAMETER	1.0	0.5	
01318901	TUBE CLAMP PACKAGE	0.9	0.4	

TUBE HEATER VHED - High Efficiency Core and Extension Packages

91409408	10'/ALUMINUM HEAT TREATED/ 16GA./4" DIAMETER	27.0	12.2	
474833	BURNER TUBE, 10', VES	30.0	13.6	
474884	REFLECTOR, HIGH EFF, ALUM, 8'	6.1	2.8	
474885	END, CAP, REFLECTOR, HIGH EFF ALUMINUM	2.0	0.9	
474886	HANGER, TUBE & REFLECTOR HIGH EFF, 4"	1.3	0.6	
91907302	"S" HOOK	0.0	0.0	
474887	SUPPORT KIT, REFLECTOR HIGH EFF	0.4	0.2	
91107720	U-CLIP PACKAGE (20 PCS)	1.0	0.5	
474888	CLAMP PACKAGE, TUBE HIGH EFF	1.3	0.6	

TUBE HEATER VHE - Linear Standard Parts

91409408	10'/ALUMINUM HEAT TREATED/ 16GA./4" DIAMETER	27.0	12.2	
01329700	SLIDE BAR/COUPLING BLOCK	0.0	0.0	
02750303	REFLECTOR, ALUMINUM	5.0	2.3	
02750800	REFLECTOR END CAP (ALUMINUM)	1.0	0.5	
03090100	TUBE AND REFLECTOR HANGER	1.0	0.5	
01318901	TUBE CLAMP PACKAGE	0.9	0.4	
91908004	WIRE FORM HANGER	0.0	0.0	
94320812	SCREW FOR REFLECTOR SUPPORT	0.0	0.0	

Toll-free: 1-800-99VALCO
Phone: (+1) 419-678-8731
Fax: (+1) 419-678-2200

TUBE HEATER (Non-SRP) - BURNER UNITS

VES LP and NATURAL GAS BURNER UNITS

CATALOG NUMBER	ITEM DESCRIPTION	SHIPPING WEIGHT		LIST PRICE
		LBS.	KG.	
474810	VES, 80K BTU, LP, DSI	29.0	13.2	
474811	VES, 80K BTU, NAT DSI	25.0	11.3	
474812	VES, 100K BTU, LP, DSI	25.0	11.3	
474813	VES, 100K BTU, NAT, DSI	25.0	11.3	
474814	VES, 125K BTU, LP, DSI	25.0	11.3	
474815	VES, 125K BTU, NAT, DSI	25.0	11.3	
474816	VES, 150K BTU, LP, DSI	25.0	11.3	
474817	VES, 150K BTU, NG, DSI	25.0	11.3	

Toll-free: 1-800-99VALCO
Phone: (+1) 419-678-8731
Fax: (+1) 419-678-2200

SECTION 41
INFRA-RADIANT GAS HEATERS

IN THIS CATALOG SECTION

PAGE NUMBER	CONTENTS
41-02	M3 - M5 Heaters
41-03	M8 - Gas Hose Kits
41-04	Gas Regulators - Heating Controls - Modulating Gas Valve - Accessories

REPAIRS

SEE REPAIR LISTING & REFERENCE MATERIAL IN SEPARATE CATALOG

INFRA-RADIANT GAS HEATERS

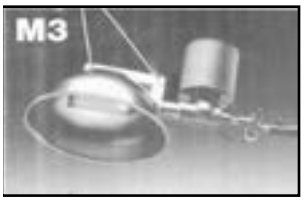

- *PERFECT FOR SMALL WEAN TO FINISH PENS*
- *5,425 BTU'S (MAX)*
- *STANDARD STAINLESS STEEL FILTER OR OPTIONAL HEAVY DUTY FILTER*
- *AVAILABLE IN LP OR NATURAL GAS*
- *HANGER BRACKET IS NOT INCLUDED*

MODEL M3 INFRA-RADIANT HEATERS

CATALOG NUMBER	ITEM DESCRIPTION	SHIP WEIGHT		LIST PRICE
		LBS.	KGS.	
H503-LP	Model M3 - 5,000 BTU Infra-Radiant Heater (LP)	2.1	1.0	
H503-NG	Model M3 - 5,000 BTU Infra-Radiant Heater (NG)	2.1	0.9	

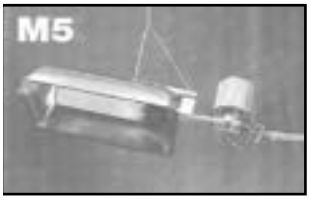

- *PERFECT FOR MID-SIZED WEAN TO FINISH PENS*
- *10,850 BTU'S (MAX)*
- *STANDARD STAINLESS STEEL FILTER OR OPTIONAL HEAVY DUTY FILTER*
- *AVAILABLE IN LP OR NATURAL GAS*
- *HANGER BRACKET IS INCLUDED*

MODEL M5 INFRA-RADIANT HEATERS

CATALOG NUMBER	ITEM DESCRIPTION	SHIP WEIGHT		LIST PRICE
		LBS.	KGS.	
H505-LP	Model M5 - 10,000 BTU Infra-Radiant Heater (LP)	3.9	1.8	
H505-NG	Model M5 - 10,000 BTU Infra-Radiant Heater (NG)	8.0	3.6	

Toll-free: 1-800-99VALCO
Phone: (+1) 419-678-8731
Fax: (+1) 419-678-2200

INFRA-RADIANT GAS HEATERS

- *PERFECT FOR LARGE WEAN TO FINISH PENS*
- *17,200 BTU'S (MAX)*
- *LARGE (18' DIAMETER) HEAT PATTERN*
- *STANDARD STAINLESS STEEL FILTER OR OPTIONAL HEAVY DUTY FILTER*
- *AVAILABLE IN LP OR NATURAL GAS*
- *HANGER BRACKET IS INCLUDED*

MODEL M8 INFRA-RADIANT HEATERS

CATALOG NUMBER	ITEM DESCRIPTION	SHIP WEIGHT LBS.	SHIP WEIGHT KGS.	LIST PRICE
H508-65-LP	Model M8 - 17,200 BTU Infra-Radiant Heater (LP)	4.0	1.8	
H508-NG	Model M8 - 17,200 BTU Infra-Radiant Heater (NG)	3.2	1.5	

GAS HOSE KITS

CATALOG NUMBER	ITEM DESCRIPTION	SHIP WEIGHT LBS.	SHIP WEIGHT KGS.	LIST PRICE
H513-6	6' AGA LP Gas Hose With Swivel & 3/8" NPT Fitting	0.70	0.32	
H513-8	8' AGA LP Gas Hose With Swivel & 3/8" NPT Fitting	1.20	0.54	
H513-10	10' AGA LP Gas Hose With Swivel & 3/8" NPT Fitting	1.10	0.50	
H526	Quick Coupler Set - Male & Female Ends With Ball Valve and Dust Cap, 3/8" NPT	0.76	0.34	
ZH561	Quick Coupler, 3/8" male	0.08	0.03	

Note: Specify length of hose kit when ordering Infra-Radiant Heater models M2, M3, M5 and M8. Includes fittings to fit a 3/8" NPT pipe.

Misc. Items

CATALOG NUMBER	ITEM DESCRIPTION	SHIP WEIGHT LBS.	SHIP WEIGHT KGS.	LIST PRICE
811009	DUST PLUG, INTAKE, M SERIES	0.01	0.00	
811010	BRUSH, CLEANING, VENTURE/INTAKE, M5 & M8	0.06	0.03	
811011	BRUSH, HEAVY, DEEP CLEANING/INTAKE, DRILL, M5 & M8	0.06	0.03	

GAS HEATING ACCESSORIES

CATALOG NUMBER	ITEM DESCRIPTION	SHIP WEIGHT LBS.	SHIP WEIGHT KGS.	LIST PRICE
ZH500-LP	Gas Gauge, 0 to 15 psi (LP)	1.83	0.83	
811016	Gas Regulator Kit, Includes fittings	0.62	0.28	
PL-009-006	Gas Shut Off Valve – Manual, 3/8” x 3/8” Female NPT, Brass, 10 PSI (High Pressure)	0.00	0.00	
472-80865	Gas Hose 1/2" x 10 foot (International)	0.00	0.00	
ZH620	Optional Heavy Duty Filter	0.33	0.15	
H568	Heater Mounted Infra - Radiant Temp Sensor Bracket Kit	0.31	0.14	
H517	Kit Hanging Bracket Assembly for Radiant Heater & Hardware	4.32	1.96	

INFRA-RADIANT GAS HEATERS

GAS REGULATORS

CATALOG NUMBER	ITEM DESCRIPTION	SHIP WEIGHT LBS.	SHIP WEIGHT KGS.	LIST PRICE
H500-2CK	Gas Regulator - PR 531 - 0.2 to 4.5 PSI, 200,000 BTU's Maximum (LP)	0.54	0.24	
H500-5CKR	Gas Regulator - 4-6 PSI With Pressure Relief	2.50	1.13	
H500-P12	Gas Regulator With Pilot - PR 230 / 12 - 0.2 to 5 PSI	0.00	0.00	
H500-P25	Gas Regulator With Pilot - PR 230 / 25 - 0.2 to 5 PSI	0.00	0.00	

GAS HEATING Controls

CATALOG NUMBER	ITEM DESCRIPTION	SHIP WEIGHT LBS.	SHIP WEIGHT KGS.	LIST PRICE
H501	Gas Solenoid Valve 1/4”, 110VAC	0.00	0.00	
ZH644	Modulating Thermostat TU-16, for Individual Heaters to 3,500 BTU’s LP	0.67	0.30	
ZH643	Modulating Thermostat TU-22, for Individual Heaters to 10,000 BTU’s LP	0.66	0.30	
ZH645	Modulating Thermostat TU-27, for Individual Heaters to 15,000 BTU’s LP	0.69	0.31	
ZH646	Modulating Thermostat TU-39, for Individual Heaters to 15,000 BTU’s NG	0.67	0.30	
H520	Modulating Non-Electric Gas Valve Kit for Heaters to 600,000 BTU's LP or 200,000 BTU's NG	4.61	2.09	
H525-LP	Electric Hi-Lo Ga Controller Kit for LP Only (includes solenoid)	5.02	2.28	
811022	GAS Control, HI/LO,425KBTU,LP,SP 115VAC,FIXED BYPASS,7-10PSI IN	10.00	4.54	
811023	Control ASSEMBLY, SICK PEN MANUAL	2.00	0.91	
811024	GAS Control, HI/LOW, 200KBTU LP, 115VAC, 7-10PSI INPUT	7.00	3.18	
811025	GAS Control, HI/LO, 200K BTU LP, 230VAC, 7-10PSI INPUT	7.00	3.18	
811026	GAS Control, HI/LO, 425K BTU NG, 230VAC, 7-10PSI INPUT	10.00	4.54	
811027	GAS Control, HI/LOW, 425K BTU LP, 230VAC, 7-10PSI INPUT	10.00	4.54	
811017	Sensor Pod for M5 and M8 Brooders	0.50	0.23	

Hi-Lo Gas Valves

CATALOG NUMBER	ITEM DESCRIPTION	SHIP WEIGHT LBS.	SHIP WEIGHT KGS.	LIST PRICE
BE-020-201	GAS MANIFOLD, 2 ZONE HI-LOW W/ SICK PEN	30.0	13.61	
BE-020-202	GAS MANIFOLD, 1 ZONE HI-LO w/ SICK PEN	1.00	0.45	

SECTION 42

SPACE HEATERS

IN THIS CATALOG SECTION

PAGE NUMBER	CONTENTS
42-02	Space Heaters & Accessories

Toll-free: 1-800-99VALCO
Phone: (+1) 419-678-8731
Fax: (+1) 419-678-2200

Space Heaters

Hot Surface Ignition

SPACE HEATERS - Domestic

CATALOG NUMBER	ITEM DESCRIPTION	BTU	Gas	Volts	Hertz	Notes	SHIPPING WEIGHT LBS.	SHIPPING WEIGHT KG.	LIST PRICE
472258	Space Heater with Galvanized Housing	250K	LP	120v	60Hz	CSA/CGA Approved	118.0	53.5	
472227	Space Heater with Galvanized Housing	250K	LP	120v	60Hz	For Altitudes 6000-8000 ft. CSA/CGA Approved	115.0	52.2	
472223	Space Heater with Galvanized Housing	250K	NAT	120v	60Hz	CSA/CGA Approved	115.0	52.2	
472265	Space Heater with Galvanized Housing	250K	NAT	120v	60Hz	CSA/CGA Approved High Altitude - 6000-8000 Ft	118.0	53.5	

SPACE HEATERS - International

CATALOG NUMBER	ITEM DESCRIPTION	kW	Gas	Volts	Hertz	Notes	SHIPPING WEIGHT LBS.	SHIPPING WEIGHT KG.	LIST PRICE
472248	Space Heater with Galvanized Housing	73.3	LP	230v	50Hz	For International Use Only	115.0	52.2	

ACCESSORIES

CATALOG NUMBER	ITEM DESCRIPTION	SHIPPING WEIGHT LBS.	SHIPPING WEIGHT KG.	LIST PRICE
472-82001	Outdoor Mounting Kit	44.0	20.0	
472264	Standard Diverter Kit - For New Inside Mount Space Heater	1.5	0.7	
472-20048	Standard Diverter Kit - For all Outside Mount Space Heaters	2.0	0.9	
472269	Along-Wall Space Heater Diverter (need (1) 472-20048)	8.5	3.9	
472270	Downward Deflector Kit for 472269 - Need (1) 472269	0.2	0.1	
472-03399	Gas Space Heater Shutoff	0.8	0.4	
472-20057	110/240 VAC Thermostat	2.9	1.3	
472-06553	LP 2nd Stage Regulator - Domestic	3.2	1.5	
472-20714	1/2" x 10' Gas Hose - Domestic	2.4	1.1	
472-80867	LP 2nd Stage Regulator - International	3.2	1.5	
472-80865	1/2" x 10' Gas Hose - International	2.4	1.1	

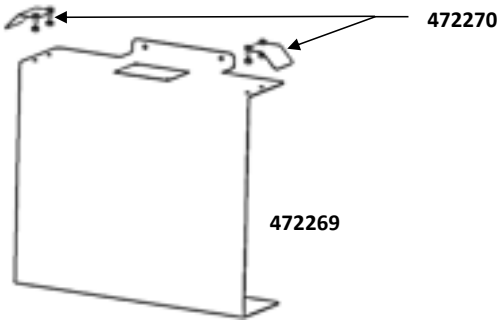

Toll-free: 1-800-99VALCO
Phone: (+1) 419-678-8731
Fax: (+1) 419-678-2200

HOW TO ORDER A BURN MIZER CREMATOR

1. Determine cremator capacity needed (see below).
2. Select exact catalog number of cremator model needed depending on type of fuel and electric to be used and door size required.
3. If wanted, select optional Secondary Burner
4. Select Exhaust Stack, Manufacture's recommendations of 3' minimum length, not needed with Secondary Burner when exhaust not under cover.
5. If needed, order Optional Winched Door.
6. If wanted, select optional grate kit for cremator.

HOW TO DETERMINE CREMATOR CAPACITY NEEDED

Info Needed:

A. Total number of animals at site
B. Sell weight of individual animal
C. Number of days animals will be on site
D. Mortality Rate

Formula to determine daily cremator capacity needed:

A x B ÷C x D = Daily Capacity Required

EXAMPLE: Poultry

3 broiler houses with 23,000 birds per house, 4.5 pounds per bird, on the farm for 44 days with 4% mortality:

Number on farm	69,000
Weight	x 4.5
	= 310,500
Number of days	÷ 44
	= 7057
Mortality	x .04
Pounds per day	282

Select Model 7230 Cremator with 400 pound capacity.

EXAMPLE: Swine

3 finishing houses with 1,100 pigs per house, 220 pounds per pig, 152 days on site, 3% mortality:

Number on farm	3,300
Weight	x 220
	= 726,000
Number of days	÷ 152
	= 4776
Mortality	x .03
Pounds per day	143

Select Model 7230 Cremator with 400 pound capacity. Be sure to select model with proper size door large enough for swine.

Capacities shown for cremators are based on practical usage. Actual capacity is affected by cremator size, animal size, use of grate, timely clean-out and other factors.

Note: All cremators with doors larger than 19" deep are shipped with winched loading doors. This includes some models of 8430, 8436, 9642 & 10852.

Toll-free: 1-800-99VALCO
Phone: (+1) 419-678-8731
Fax: (+1) 419-678-2200

SECTION 43
BURN MIZER CREMATORS

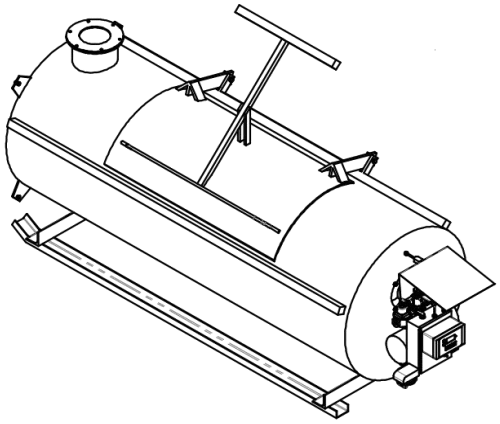

IN THIS CATALOG SECTION

PAGE NUMBER	CONTENTS
43-02	How To Order a Cremator & Determine Capacity Needed
43-03	Model 4820 Cremators
43-04	Model 4830 Cremators
43-05	Model 7230 Cremators
43-06	Model 8430 Cremators
43-07	Model 8436 Cremators
43-08	Model 9642 Cremators
43-09	Model 10852 Cremators
43-10	Model 12 - Model 20 Secondary Burners
43-11 thru 43-13	Cremator Tank Repairs

REPAIRS

SEE REPAIR LISTING & REFERENCE MATERIAL IN SEPARATE CATALOG

Toll-free: 1-800-99VALCO
Phone: (+1) 419-678-8731
Fax: (+1) 419-678-2200

MODEL 4820 BURN MIZER CREMATORS

4' Long x 20" Diameter - NOT Block Lined
3/8" - 1/2" Steel Construction Reinforced With 1" x 2" Solid Bar
6 Hour Mechanical Timer

MODEL 4820 CREMATORS - NO STACK

CATALOG NUMBER	CAPACITY			FUEL TYPE	NO. OF DOORS DOOR OPENING	ELECTRIC		SHIPPING WEIGHT		LIST PRICE
	FT^3	LBS.	KG.			Volts	Hertz	LBS.	KG.	
475400	8	100	45	Oil	1 -24" x 12"	120v	60 HZ	563.0	255.4	
475401	8	100	45	LP	1 -24" x 12"	120v	60 HZ	563.0	255.4	
475402	8	100	45	NG	1 -24" x 12"	120v	60 HZ	563.0	255.4	
475406	8	100	45	Oil	1 -24" x 12"	230v	60 HZ	563.0	255.4	
475407	8	100	45	LP	1 -24" x 12"	230v	60 HZ	563.0	255.4	
475408	8	100	45	NG	1 -24" x 12"	230v	60 HZ	563.0	255.4	
475403	8	100	45	Oil	1 -24" x 12"	230v	50 HZ	563.0	255.4	
475404	8	100	45	LP	1 -24" x 12"	230v	50 HZ	563.0	255.4	
475405	8	100	45	NG	1 -24" x 12"	230v	50 HZ	563.0	255.4	

OPTIONS - MODEL 4820 CREMATORS

DESCRIPTION & ORDERING INSTRUCTIONS		SHIPPING WEIGHT		LIST PRICE
		LBS.	KG.	
475065F-01	6" x 1' Stack Pipe with Welded Flange Ring	21.0	9.5	
475065F-02	6" x 2' Stack Pipe with Welded Flange Ring	40.0	18.1	
475065F-03	6" x 3' Stack Pipe with Welded Flange Ring	59.0	26.8	
475065F-04	6" x 4' Stack Pipe with Welded Flange Ring	78.0	35.4	
475065F-05	6" x 5' Stack Pipe with Welded Flange Ring	97.0	44.0	
475065F-06	6" x 6' Stack Pipe with Welded Flange Ring	116.0	52.6	
475065F-07	6" x 7' Stack Pipe with Welded Flange Ring	135.0	61.2	
475065F-08	6" x 8' Stack Pipe with Welded Flange Ring	154.0	69.9	

NOTE: Optional ash door & grate kit are not available on Model 4820 Cremators.

Toll-free: 1-800-99VALCO
Phone: (+1) 419-678-8731
Fax: (+1) 419-678-2200

MODEL 4830 BURN MIZER CREMATORS

4' Long x 30" Diameter - Block Lined
3/8" - 1/2" Steel Construction Reinforced With 1" x 2" Solid Bar
12 Hour Solid State Timer & Heat Control, Ash Removal Door

MODEL 4830 CREMATORS - NO STACK

CATALOG NUMBER	CAPACITY			FUEL TYPE	NO. OF DOORS DOOR OPENING	ELECTRIC		SHIPPING WEIGHT		LIST PRICE
	FT^3	LBS.	KG.			Volts	Hertz	LBS.	KG.	
475409	13	200	90	Oil	1 - 28" X 18"	120v	60 HZ	1,400.0	635.0	
475410	13	200	90	LP	1 - 28" X 18"	120v	60 HZ	1,400.0	635.0	
475411	13	200	90	NG	1 - 28" X 18"	120v	60 HZ	1,400.0	635.0	
475415	13	200	90	Oil	1 - 28" X 18"	230v	60 HZ	1,400.0	635.0	
475416	13	200	90	LP	1 - 28" X 18"	230v	60 HZ	1,400.0	635.0	
475417	13	200	90	NG	1 - 28" X 18"	230v	60 HZ	1,400.0	635.0	
475412	13	200	90	Oil	1 - 28" X 18"	230v	50 HZ	1,400.0	635.0	
475413	13	200	90	LP	1 - 28" X 18"	230v	50 HZ	1,400.0	635.0	
475414	13	200	90	NG	1 - 28" X 18"	230v	50 HZ	1,400.0	635.0	

OPTIONS - MODEL 4830 CREMATORS

CATALOG NUMBER	ITEM DESCRIPTION	SHIPPING WEIGHT		LIST PRICE
		LBS.	KG.	
475090	Optional Grate Kit for Model 4830 Cremators	160.0	72.6	
475070	Optional Winched Loading Door If this option is chosen for a two door model cremator, the two doors will be automatically be changed to a single door.	95.0	43.1	
4753812	Optional Winch Load System	200.0	90.7	
475065F-01	6" x 1' Stack Pipe with Welded Flange Ring	21.0	9.5	
475065F-02	6" x 2' Stack Pipe with Welded Flange Ring	40.0	18.1	
475065F-03	6" x 3' Stack Pipe with Welded Flange Ring	59.0	26.8	
475065F-04	6" x 4' Stack Pipe with Welded Flange Ring	78.0	35.4	
475065F-05	6" x 5' Stack Pipe with Welded Flange Ring	97.0	44.0	
475065F-06	6" x 6' Stack Pipe with Welded Flange Ring	116.0	52.6	
475065F-07	6" x 7' Stack Pipe with Welded Flange Ring	135.0	61.2	
475065F-08	6" x 8' Stack Pipe with Welded Flange Ring	154.0	69.9	

Toll-free: 1-800-99VALCO
Phone: (+1) 419-678-8731
Fax: (+1) 419-678-2200

MODEL 7230 BURN MIZER CREMATORS

6' Long x 30" Diameter - Block Lined
3/8" - 1/2" Steel Construction Reinforced With 1" x 2" Solid Bar
12 Hour Solid State Timer & Heater Control, Ash Removal Door

MODEL 7230 CREMATORS - NO STACK

CATALOG NUMBER	CAPACITY			FUEL TYPE	NO. OF DOORS DOOR OPENING	ELECTRIC		SHIPPING WEIGHT		LIST PRICE
	FT^3	LBS.	KG.			Volts	Hertz	LBS.	KG.	
475418	20	400	181	Oil	1 - 42" x 18"	120v	60 HZ	1,650.0	748.4	
475419	20	400	181	LP	1 - 42" x 18"	120v	60 HZ	1,650.0	748.4	
475420	20	400	181	NG	1 - 42" x 18"	120v	60 HZ	1,650.0	748.4	
475424	20	400	181	Oil	1 - 42" x 18"	230v	60 HZ	1,650.0	748.4	
475425	20	400	181	LP	1 - 42" x 18"	230v	60 HZ	1,650.0	748.4	
475426	20	400	181	NG	1 - 42" x 18"	230v	60 HZ	1,650.0	748.4	
475421	20	400	181	Oil	1 - 42" x 18"	230v	50 HZ	1,650.0	748.4	
475422	20	400	181	LP	1 - 42" x 18"	230v	50 HZ	1,650.0	748.4	
475423	20	400	181	NG	1 - 42" x 18"	230v	50 HZ	1,650.0	748.4	

OPTIONS - MODEL 7230 CREMATORS

CATALOG NUMBER	ITEM DESCRIPTION	SHIPPING WEIGHT		LIST PRICE
		LBS.	KG.	
475091	Optional Grate Kit for Model 7230/8430 Cremators	216.0	98.0	
475070	Optional Winched Loading Door If this option is chosen for a two door model cremator, the two doors will be automatically be changed to a single door.	95.0	43.1	
4753812	Optional Winch Load System	200.0	90.7	
475065F-01	6" x 1' Stack Pipe with Welded Flange Ring	21.0	9.5	
475065F-02	6" x 2' Stack Pipe with Welded Flange Ring	40.0	18.1	
475065F-03	6" x 3' Stack Pipe with Welded Flange Ring	59.0	26.8	
475065F-04	6" x 4' Stack Pipe with Welded Flange Ring	78.0	35.4	
475065F-05	6" x 5' Stack Pipe with Welded Flange Ring	97.0	44.0	
475065F-06	6" x 6' Stack Pipe with Welded Flange Ring	116.0	52.6	
475065F-07	6" x 7' Stack Pipe with Welded Flange Ring	135.0	61.2	
475065F-08	6" x 8' Stack Pipe with Welded Flange Ring	154.0	69.9	

Toll-free: 1-800-99VALCO
Phone: (+1) 419-678-8731
Fax: (+1) 419-678-2200

MODEL8430 BURN MIZER CREMATORS

7' Long x 30" Diameter - Block Lined; 3/8" - 1/2" Steel Construction Reinforced With 1" x 2" Solid Bar
12 Hour Solid State Timer & Heater Control, Ash Removal Door

MODEL 8430 CREMATORS - NO STACK

CATALOG NUMBER	CAPACITY			FUEL TYPE	NO. OF DOORS DOOR SIZE	ELECTRIC		SHIPPING WEIGHT		LIST PRICE
	FT^3	LBS.	KG.			Volts	Hertz	LBS.	KG.	
475427	25	500	226	Oil	1 - 42" x 18"	120v	60 HZ	1,925.0	873.2	
475428	25	500	226	LP	1 - 42" x 18"	120v	60 HZ	1,925.0	873.2	
475429	25	500	226	NG	1 - 42" x 18"	120v	60 HZ	1,925.0	873.2	
475433	25	500	226	Oil	1 - 42" x 18"	230v	60 HZ	1,925.0	873.2	
475434	25	500	226	LP	1 - 42" x 18"	230v	60 HZ	1,925.0	873.2	
475435	25	500	226	NG	1 - 42" x 18"	230v	60 HZ	1,925.0	873.2	
475430	25	500	226	Oil	1 - 42" x 18"	230v	50 HZ	1,925.0	873.2	
475431	25	500	226	LP	1 - 42" x 18"	230v	50 HZ	1,925.0	873.2	
475432	25	500	226	NG	1 - 42" x 18"	230v	50 HZ	1,925.0	873.2	

MODEL 8430 CREMATORS - NO STACK (with Raised Burner for Hatchery Waste)

475508	25	500	226	LP	1 - 42" x 18"	230v	50 HZ	1,925.0	873.2	

OPTIONS - MODEL 8430 CREMATORS

CATALOG NUMBER	ITEM DESCRIPTION	SHIPPING WEIGHT		LIST PRICE
		LBS.	KG.	
475091	Optional Grate Kit for Model 8430 Cremators	216.0	98.0	
475070	Optional Winched Loading Door If this option is chosen for a two door model cremator, the two doors will be automatically be changed to a single door.	95.0	43.1	
4753812	Optional Winch Load System	200.0	90.7	
475065F-01	6" x 1' Stack Pipe with Welded Flange Ring	21.0	9.5	
475065F-02	6" x 2' Stack Pipe with Welded Flange Ring	40.0	18.1	
475065F-03	6" x 3' Stack Pipe with Welded Flange Ring	59.0	26.8	
475065F-04	6" x 4' Stack Pipe with Welded Flange Ring	78.0	35.4	
475065F-05	6" x 5' Stack Pipe with Welded Flange Ring	97.0	44.0	
475065F-06	6" x 6' Stack Pipe with Welded Flange Ring	116.0	52.6	
475065F-07	6" x 7' Stack Pipe with Welded Flange Ring	135.0	61.2	
475065F-08	6" x 8' Stack Pipe with Welded Flange Ring	154.0	69.9	

Toll-free: 1-800-99VALCO
Phone: (+1) 419-678-8731
Fax: (+1) 419-678-2200

MODEL 8436 BURN MIZER CREMATORS

7' Long x 36" Diameter - Block Lined; 3/8" - 1/2" Steel Construction Reinforced With 1" x 2" Solid Bar
12 Hour Solid State Timer & Heat Control, Ash Removal Door
Note: All cremators with doors larger than 19" deep are shipped with winched loading doors. This includes some 8436 models .

MODEL 8436 CREMATORS - NO STACK

CATALOG NUMBER	CAPACITY			FUEL TYPE	NO. OF DOORS DOOR OPENING	ELECTRIC		SHIPPING WEIGHT		LIST PRICE
	FT^3	LBS.	KG.			Volts	Hertz	LBS.	KG.	
475436	35	600	272	Oil	1 - 36" x 18"	120v	60 HZ	2,550.0	1,156.7	
475437	35	600	272	LP	1 - 36" x 18"	120v	60 HZ	2,550.0	1,156.7	
475438	35	600	272	NG	1 - 36" x 18"	120v	60 HZ	2,550.0	1,156.7	
475439	35	600	272	Oil	1 - 42" x 18"	120v	60 HZ	2,550.0	1,156.7	
475440	35	600	272	LP	1 - 42" x 18"	120v	60 HZ	2,550.0	1,156.7	
475441	35	600	272	NG	1 - 42" x 18"	120v	60 HZ	2,550.0	1,156.7	
475442	35	600	272	Oil	1 - 54" x 23" Winch	120v	60 HZ	2,550.0	1,156.7	
475443	35	600	272	LP	1 - 54" x 23" Winch	120v	60 HZ	2,550.0	1,156.7	
475444	35	600	272	NG	1 - 54" x 23" Winch	120v	60 HZ	2,550.0	1,156.7	
475454	35	600	272	Oil	1 - 36" x 18"	230v	60 HZ	2,550.0	1,156.7	
475455	35	600	272	LP	1 - 36" x 18"	230v	60 HZ	2,550.0	1,156.7	
475456	35	600	272	NG	1 - 36" x 18"	230v	60 HZ	2,550.0	1,156.7	
475457	35	600	272	Oil	1 - 42" x 18"	230v	60 HZ	2,550.0	1,156.7	
475458	35	600	272	LP	1 - 42" x 18"	230v	60 HZ	2,550.0	1,156.7	
475459	35	600	272	NG	1 - 42" x 18"	230v	60 HZ	2,550.0	1,156.7	
475460	35	600	272	Oil	1 - 54" x 23" Winch	230v	60 HZ	2,550.0	1,156.7	
475461	35	600	272	LP	1 - 54" x 23" Winch	230v	60 HZ	2,550.0	1,156.7	
475462	35	600	272	NG	1 - 54" x 23" Winch	230v	60 HZ	2,550.0	1,156.7	
475445	35	600	272	Oil	1 - 36" x 18"	230v	50 HZ	2,550.0	1,156.7	
475446	35	600	272	LP	1 - 36" x 18"	230v	50 HZ	2,550.0	1,156.7	
475447	35	600	272	NG	1 - 36" x 18"	230v	50 HZ	2,550.0	1,156.7	
475448	35	600	272	Oil	1 - 42" x 18"	230v	50 HZ	2,550.0	1,156.7	
475449	35	600	272	LP	1 - 42" x 18"	230v	50 HZ	2,550.0	1,156.7	
475450	35	600	272	NG	1 - 42" x 18"	230v	50 HZ	2,550.0	1,156.7	
475451	35	600	272	Oil	1 - 54" x 23" Winch	230v	50 HZ	2,550.0	1,156.7	
475452	35	600	272	LP	1 - 54" x 23" Winch	230v	50 HZ	2,550.0	1,156.7	
475453	35	600	272	NG	1 - 54" x 23" Winch	230v	50 HZ	2,550.0	1,156.7	

OPTIONS - MODEL 8436 CREMATORS

CATALOG NUMBER	ITEM DESCRIPTION	SHIPPING WEIGHT		LIST PRICE
		LBS.	KG.	
475092	Optional Grate Kit for Model 8436 Cremators	268.0	121.6	
475070	Optional Winched Loading Door	95.0	43.1	
4753812	Optional Winch Load System	200.0	90.7	
475065F-01	6" x 1' Stack Pipe with Welded Flange Ring	21.0	9.5	
475065F-02	6" x 2' Stack Pipe with Welded Flange Ring	40.0	18.1	
475065F-03	6" x 3' Stack Pipe with Welded Flange Ring	59.0	26.8	
475065F-04	6" x 4' Stack Pipe with Welded Flange Ring	78.0	35.4	
475065F-05	6" x 5' Stack Pipe with Welded Flange Ring	97.0	44.0	
475065F-06	6" x 6' Stack Pipe with Welded Flange Ring	116.0	52.6	
475065F-07	6" x 7' Stack Pipe with Welded Flange Ring	135.0	61.2	
475065F-08	6" x 8' Stack Pipe with Welded Flange Ring	154.0	69.9	

Toll-free: 1-800-99VALCO
Phone: (+1) 419-678-8731
Fax: (+1) 419-678-2200

MODEL 9642 BURN MIZER CREMATORS

8' Long x 42" Diameter - Block Lined; 3/8" - 1/2" Steel Construction Reinforced With 1" x 2" Solid Bar

Winched Door Included As Standard on All Model 9642 Units

12 Hour Solid State Timer & Heat Control, Ash Removal Door

MODEL 9642 CREMATORS - NO STACK

CATALOG NUMBER	CAPACITY			FUEL TYPE	NO. OF DOORS DOOR OPENING	ELECTRIC		SHIPPING WEIGHT		LIST PRICE
	FT^3	LBS.	KG.			Volts	Hertz	LBS.	KG.	
475463	58	1200	544	Oil	1 - 66" X 31" Winch	120v	60 HZ	3,450.0	1,564.9	
475464	58	1200	544	LP	1 - 66" X 31" Winch	120v	60 HZ	3,450.0	1,564.9	
475465	58	1200	544	NG	1 - 66" X 31" Winch	120v	60 HZ	3,450.0	1,564.9	
475469	58	1200	544	Oil	1 - 66" X 31" Winch	230v	60 HZ	3,450.0	1,564.9	
475470	58	1200	544	LP	1 - 66" X 31" Winch	230v	60 HZ	3,450.0	1,564.9	
475471	58	1200	544	NG	1 - 66" X 31" Winch	230v	60 HZ	3,450.0	1,564.9	
475466	58	1200	544	Oil	1 - 66" X 31" Winch	230v	50 HZ	3,450.0	1,564.9	
475467	58	1200	544	LP	1 - 66" X 31" Winch	230v	50 HZ	3,450.0	1,564.9	
475468	58	1200	544	NG	1 - 66" X 31" Winch	230v	50 HZ	3,450.0	1,564.9	

OPTIONS - MODEL 9642 CREMATORS

CATALOG NUMBER	ITEM DESCRIPTION	SHIPPING WEIGHT		LIST PRICE
		LBS.	KG.	
475093	Optional Grate Kit for Model 9642 Cremators	336.0	152.4	
4753812	Optional Winch Load System	200.0	90.7	
475065F-01	6" x 1' Stack Pipe with Welded Flange Ring	21.0	9.5	
475065F-02	6" x 2' Stack Pipe with Welded Flange Ring	40.0	18.1	
475065F-03	6" x 3' Stack Pipe with Welded Flange Ring	59.0	26.8	
475065F-04	6" x 4' Stack Pipe with Welded Flange Ring	78.0	35.4	
475065F-05	6" x 5' Stack Pipe with Welded Flange Ring	97.0	44.0	
475065F-06	6" x 6' Stack Pipe with Welded Flange Ring	116.0	52.6	
475065F-07	6" x 7' Stack Pipe with Welded Flange Ring	135.0	61.2	
475065F-08	6" x 8' Stack Pipe with Welded Flange Ring	154.0	69.9	

WINCHED DOOR IS STANDARD ON ALL MODEL 9642 CREMATORS

Toll-free: 1-800-99VALCO
Phone: (+1) 419-678-8731
Fax: (+1) 419-678-2200

MODEL 10852 BURN MIZER CREMATORS

9' Long x 52" Diameter - Block Lined

3/8" - 1/2" Steel Construction Reinforced With 1" x 2" Solid Bar

Winched Door Included As Standard on All Model 10852 Units

12 Hour Solid State Timer & Heat Control, Ash Removal Door

MODEL 10852 CREMATORS - NO STACK

CATALOG NUMBER	CAPACITY			FUEL TYPE	NO. OF DOORS DOOR OPENING	ELECTRIC		SHIPPING WEIGHT		LIST PRICE
	FT^3	LBS.	KG.			Volts	Hertz	LBS.	KG.	
475472	106	2000	907	Oil	1 - 77" X 45" Winch	120v	60 HZ	5,645.0	2,560.5	
475473	106	2000	907	LP	1 - 77" X 45" Winch	120v	60 HZ	5,645.0	2,560.5	
475474	106	2000	907	NG	1 - 77" X 45" Winch	120v	60 HZ	5,645.0	2,560.5	
475478	106	2000	907	Oil	1 - 77" X 45" Winch	230v	60 HZ	5,645.0	2,560.5	
475479	106	2000	907	LP	1 - 77" X 45" Winch	230v	60 HZ	5,645.0	2,560.5	
475480	106	2000	907	NG	1 - 77" X 45" Winch	230v	60 HZ	5,645.0	2,560.5	
475475	106	2000	907	Oil	1 - 77" X 45" Winch	230v	50 HZ	5,645.0	2,560.5	
475476	106	2000	907	LP	1 - 77" X 45" Winch	230v	50 HZ	4,826.0	2,189.0	
475477	106	2000	907	NG	1 - 77" X 45" Winch	230v	50 HZ	5,645.0	2,560.5	

OPTIONS - MODEL 10852 CREMATORS

CATALOG NUMBER	ITEM DESCRIPTION	SHIPPING WEIGHT		LIST PRICE
		LBS.	KG.	
475095	Optional Grate Kit for Model 10852 Cremators	423.0	191.9	
4753812	Optional Winch Load System	200.0	90.7	
475066F-01	8" x 1' Stack Pipe with Welded Flange Ring	31.0	14.1	
475066F-02	8" x 2' Stack Pipe with Welded Flange Ring	60.0	27.2	
475066F-03	8" x 3' Stack Pipe with Welded Flange Ring	89.0	40.4	
475066F-04	8" x 4' Stack Pipe with Welded Flange Ring	118.0	53.5	
475066F-05	8" x 5' Stack Pipe with Welded Flange Ring	147.0	66.7	
475066F-06	8" x 6' Stack Pipe with Welded Flange Ring	176.0	79.8	
475066F-07	8" x 7' Stack Pipe with Welded Flange Ring	205.0	93.0	
475066F-08	8" x 8' Stack Pipe with Welded Flange Ring	234.0	106.1	

WINCHED DOOR IS STANDARD ON ALL MODEL 10852 CREMATORS

Toll-free: 1-800-99VALCO
Phone: (+1) 419-678-8731
Fax: (+1) 419-678-2200

MODEL 20 BURN MIZER SECONDARY BURNERS

Model 20: 48" Long x 20" Diameter
1/4" Steel Construction
6 Hour Mechanical Timer

Highly recommended to order (1) 475521 Shipping Stand per Secondary Burner

MODEL 20 SECONDARY BURNERS (EPA approved)

CATALOG NUMBER	STACK		FUEL TYPE	ELECTRIC TYPE		SHIPPING WEIGHT		LIST PRICE
	IN	OUT		Volts	Hertz	LBS.	KG.	
475490	6"	8"	Oil	120v	60 HZ	145.0	65.8	
475491	6"	8"	LP	120v	60 HZ	635.0	288.0	
475492	6"	8"	NG	120v	60 HZ	635.0	288.0	
475496	0	8"	Oil	230v	60 HZ	635.0	288.0	
475497	6"	8"	LP	230v	60 HZ	750.0	340.2	
475498	6"	8"	NG	230v	60 HZ	635.0	288.0	
475493	6"	8"	Oil	230v	50 HZ	635.0	288.0	
475494	6"	8"	LP	230v	50 HZ	635.0	288.0	
475495	6"	8"	NG	230v	50 HZ	635.0	288.0	
475521	Shipping Frame for Secondary Burner					60.0	27.2	

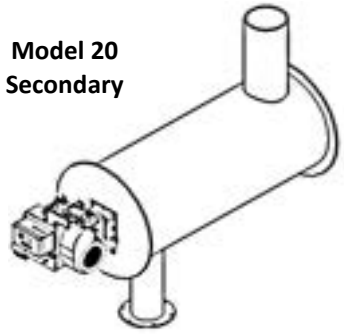

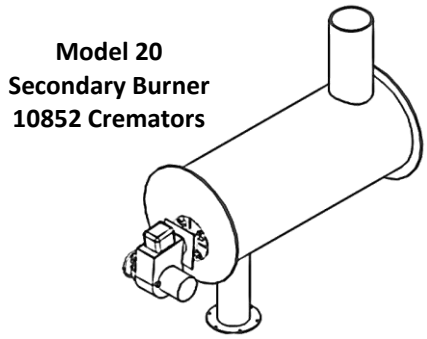

MODEL 20 SECONDARY BURNERS for 10852 CREMATORS (EPA approved)

CATALOG NUMBER	STACK		FUEL TYPE	ELECTRIC TYPE		SHIPPING WEIGHT		LIST PRICE
	IN	OUT		Volts	Hertz	LBS.	KG.	
475499	8"	10"	Oil	120v	60 HZ	650.0	294.8	
475500	8"	10"	LP	120v	60 HZ	650.0	294.8	
475501	8"	10"	NG	120v	60 HZ	650.0	294.8	
475505	8"	10"	Oil	230v	60 HZ	650.0	294.8	
475506	8"	10"	LP	230v	60 HZ	650.0	294.8	
475507	8"	10"	NG	230v	60 HZ	650.0	294.8	
475502	8"	10"	Oil	230v	50 HZ	650.0	294.8	
475503	8"	10"	LP	230v	50 HZ	693.0	314.3	
475504	8"	10"	NG	230v	50 HZ	650.0	294.8	

BURN MIZER CREMATOR TANK REPAIRS

BLOCK LINER REPLACEMENT KITS

CATALOG NUMBER	ITEM DESCRIPTION	FOR MODEL	SHIPPING WEIGHT		LIST PRICE
			LBS.	KG.	
475175	Replacement Block Liner Kit	4830	420.0	190.5	
475176	Replacement Block Liner Kit	7230	580.0	263.1	
475177	Replacement Block Liner Kit	8436	620.0	281.2	
475178	Replacement Block Liner Kit	9642	925.0	419.6	
475174	Replacement Block Liner Kit	10852	925.0	419.6	

Kits include liner blocks, mortar & door insulation repair items (insulation, straps, & hardware).

REPLACEMENT LINER BLOCK ONLY

CATALOG NUMBER	ITEM DESCRIPTION	FOR MODEL	SHIPPING WEIGHT		LIST PRICE
			LBS.	KG.	
475180	Repair Block Only - 30" Diameters	4830 - 7230 - 8430	10.0	4.5	
475181	Repair Block Only - 36" Diameters	8436	13.5	6.1	
475182	Repair Block Only - 42" Diameter	9642	20.0	9.1	
475183	Repair Block Only - 52" Diameter	10852	20.0	9.1	
4753510	Refractory Mortar - 15 lb. Pail		15.0	6.8	
4753511	Refractory Mortar - 55 lb. Pail		0.0	0.0	

REPAIR DOORS ONLY (NO INSULATION, STRAPS, ANGLES, OR HARDWARE)

CATALOG NUMBER	ITEM DESCRIPTION	FOR MODEL	SHIPPING WEIGHT		LIST PRICE
			LBS.	KG.	
475220	Repair Door Only - 1 Door - 28" x 19"	4830	24.0	10.9	
475221	Repair Door Only - 1 Door - 36" x 19"	8436	24.0	10.9	
475222	Repair Door Only - 1 Door - 42" x 19"	7230 - 8430 - 8436	24.0	10.9	
475225	Repair Door Only - 1 Door - 52" x 22"	8436	24.0	10.9	
475227	Repair Door Only - 1 Door - 66" x 33"	9642	24.0	10.9	
475228	Repair Door Only - 1 Door - 78" x 51"	10852	24.0	10.9	

BURN MIZER CREMATOR TANK REPAIRS

DOOR INSULATION REPAIR KITS

CATALOG NUMBER	ITEM DESCRIPTION	FOR MODEL	SHIPPING WEIGHT		LIST PRICE
			LBS.	KG.	
475150	Door Insulation Repair Kit for Door - 28" x 19"	4830	24.0	10.9	
475151	Door Insulation Repair Kit for Door - 36" x 19"	8436	25.0	11.3	
475152	Door Insulation Repair Kit for Door - 42" x 19"	7230 - 8430 - 8436	25.0	11.3	
475155	Door Insulation Repair Kit for Door - 52" x 22"	8436	35.0	15.9	
475156	Door Insulation Repair Kit for Door - 66" x 33"	9642	68.0	30.8	
475157	Door Insulation Repair Kit for Door - 78" x 51"	10852	45.0	20.4	

Kits include repair insulation, straps, door angles, and hardware for installation.

REPAIR INSULATION ONLY FOR DOORS

CATALOG NUMBER	ITEM DESCRIPTION	FOR MODEL	SHIPPING WEIGHT		LIST PRICE
			LBS.	KG.	
475160	Repair Insulation Only for 1 Door - 28" x 19"	4830	0.0	0.0	
475161	Repair Insulation Only for 1 Door - 36" x 19"	8436	0.0	0.0	
475162	Repair Insulation Only for 1 Door - 42" x 19"	7230 - 8430 - 8436	0.0	0.0	
475165	Repair Insulation Only for 1 Door - 52" x 22"	8436	0.0	0.0	
475166	Repair Insulation Only for 1 Door - 66" x 33"	9642	0.0	0.0	
475167	Repair Insulation Only for 1 Door - 78" x 51"	10852	0.0	0.0	
475170	Repair Insulation - Full Roll - 34" Wide x 25' Len. - (70.8 ft^2 - 6.58 m^2)		0.0	0.0	
475171	Repair Insulation - Full Roll - 36" Wide x 25' Len. - (75 ft^2 - 6.97 m^2)		0.0	0.0	
475172	Repair Insulation - Full Roll - 48" Wide x 25' Len. - (100 ft^2 - 9.29 m^2)		0.0	0.0	

INSULATION HARDWARE ONLY

CATALOG NUMBER	ITEM DESCRIPTION	SHIPPING WEIGHT		LIST PRICE
		LBS.	KG.	
475145	5" x 16" Strap for 1 Door Insulation (2 bolts & nuts req'd) Used on all 1 Door Cremators EXCEPT Models 7230 2-Door, 8436 2-Door, & 8436 52" 1-Door	2.4	1.1	
475146	5" x 10" Strap for 2 Door Insulation (1 bolt & nut req'd) Used on Models 7230 2-Door, 8436 2-Door, & 8436 52" 1-Door	1.5	0.7	
475147	3/8" SS Nut & Bolt for Insulation Straps	0.0	0.0	

Toll-free: 1-800-99VALCO
Phone: (+1) 419-678-8731
Fax: (+1) 419-678-2200

BURN MIZER CREMATOR STACK PIPE

Stack Pipe Without Flange Ring

ITEM	6" STACK DIAMETER				8" STACK DIAMETER				10" STACK DIAMETER			
	CATALOG NUMBER	SHIP WGT		LIST	CATALOG NUMBER	SHIP WGT		LIST	CATALOG NUMBER	SHIP WGT		LIST
LEN		LBS.	KG.	PRICE		LBS.	KG.	PRICE		LBS.	KG.	PRICE
1'	475065-01	19.0	8.6		475066-01	29.0	13.2		475068-01	40.5	18.4	
2'	475065-02	38.0	17.2		475066-02	58.0	26.3		475068-02	81.0	36.7	
3'	475065-03	57.0	25.9		475066-03	87.0	39.5		475068-03	121.5	55.1	
4'	475065-04	76.0	34.5		475066-04	116.0	52.6		475068-04	161.9	73.4	
5'	475065-05	95.0	43.1		475066-05	145.0	65.8		475068-05	145.0	65.8	
6'	475065-06	114.0	51.7		475066-06	174.0	78.9		475068-06	243.0	110.2	
7'	475065-07	133.0	60.3		475066-07	203.0	92.1		475068-07	283.0	128.4	
8'	475065-08	152.0	68.9		475066-08	232.0	105.2		475068-08	324.0	147.0	

Stack Pipe With Welded Flange Ring

ITEM	6" STACK DIAMETER				8" STACK DIAMETER				10" STACK DIAMETER			
	CATALOG NUMBER	SHIP WGT		LIST	CATALOG NUMBER	SHIP WGT		LIST	CATALOG NUMBER	SHIP WGT		LIST
LEN		LBS.	KG.	PRICE		LBS.	KG.	PRICE		LBS.	KG.	PRICE
1'	475065F-01	21.0	9.5		475066F-01	31.0	14.1		475068F-01	46.0	20.9	
2'	475065F-02	40.0	18.1		475066F-02	60.0	27.2		475068F-02	87.0	39.5	
3'	475065F-03	59.0	26.8		475066F-03	89.0	40.4		475068F-03	127.0	57.6	
4'	475065F-04	78.0	35.4		475066F-04	118.0	53.5		475068F-04	168.0	76.2	
5'	475065F-05	97.0	44.0		475066F-05	147.0	66.7		475068F-05	208.0	94.3	
6'	475065F-06	116.0	52.6		475066F-06	176.0	79.8		475068F-06	249.0	112.9	
7'	475065F-07	135.0	61.2		475066F-07	205.0	93.0		475068F-07	289.0	131.1	
8'	475065F-08	154.0	69.9		475066F-08	234.0	106.1		475068F-08	330.0	149.7	

FLANGE RINGS

CATALOG NUMBER	ITEM DESCRIPTION	SHIP WGT		LIST PRICE
		LBS.	KG.	
4751530	Flange Only for 6" Stack Pipe	5.0	2.3	
4751532	Flange Only for 8" Stack Pipe	55.0	24.9	
4751531	7" Flange Only - for Repair Directly on Cremator Body Only	0.0	0.0	

STACK NOTES:

- ► 6" Stack used on all cremators except Model 10852
- ► 8" Stack used on Model 10852 cremator & secondary burners
- ► 10" stacks used for model 20 secondary burners only used on 10852 cremators.

This page left intentionally blank

SECTION 44
LIGHTING

IN THIS CATALOG SECTION	
PAGE NUMBER	CONTENTS
42-02	Once Lighting

SECTION 44
LIGHTING

Once Lighting

CATALOG NUMBER	ITEM DESCRIPTION	SHIPPING WEIGHT		LIST PRICE
		LBS.	KG.	
840115	Dimmable Optient Light	0.0	0.0	
840101	Non-Dimmable Optient Light	0.0	0.0	
840100	POWER SUPPLY NON-DIMMABLE EUV-1505024 DTA 24VDC 120VacIn	0.0	0.0	
840103	FLAT CABLE, OPTIENT, 2X18AWG 1000FT ROLL	0.0	0.0	
840104	CABLE, 2X12AWG, PVC, BLACK 1000FT ROLL	0.0	0.0	
840105	LOCKNUT, 3/4IN NPT, NYLON -	0.0	0.0	
840107	INLINE SPLICE CONNECTOR, 12-20 AWG	0.0	0.0	
840109	3 SLOT SPLICE CONNECTOR, 12-24 AWG	0.0	0.0	
840110	CORD GRIP, 3/4IN NPT, RECT. SLOT	0.0	0.0	
840111	HEATSHRINK ENDCAP 3/8IN BLACK -	0.0	0.0	
840112	CORD GRIP, 1/2IN NPT, 0.17-0.45" DIA.	0.0	0.0	
840113	JUNCTION BOX, 3/4IN NPT W/ ACCESSORIES	0.0	0.0	
840114	JUNCTION BOX COVER, CENTER KNOCKOUT	0.0	0.0	
840116	POWER METER, TOTAL KWH METER, 2 DEC, 120VAC SP, 50A	0.0	0.0	
840117	Surge Suppressor, CITEL MLPXU-277L-W-HE W/ LED Indicator	0.0	0.0	
840118	Fuse, SB, 4A, 250v	0.0	0.0	
840119	Sleeve, Fuse, SB, 4A, 250v	5.4	2.4	
840102-Q500	CABLE TIE, 4IN, NYLON BLACK BAG OF 500	0.0	0.0	
840108-Q12	HEATSHRINK SPLICE W/ EPOXY, 12 PCS OF 0.7"X4" [4FT LG TTL]	0.0	0.0	

Toll-free: 1-800-99VALCO
Phone: (+1) 419-678-8731
Fax: (+1) 419-678-2200

SECTION 46
SAFEGUARD TRAPS

Safeguard™
A VAL-CO™ Product

IN THIS CATALOG SECTION

PAGE NUMBER	CONTENTS
46-02	Front Release Traps & Accessories
46-03	Rear Release Traps & Accessories
46-04	Specialty Traps
46-04	Rodent Traps
46-04	Bird Cages & Carriers

00052872

Toll-free: 1-800-99VALCO
Phone: (+1) 419-678-8731
Fax: (+1) 419-678-2200

SECTION 46

Safeguard™
A VAL-CO™ Product

00050063

Front Release Models

CATALOG #	ITEM DESCRIPTION Trap Size	Trap Mesh	Application	SHIP WEIGHT LBS.	SHIP WEIGHT KG.	LIST PRICE
00050450	18" x 5" x 5"	1/2" x 1" x 16 Gauge	Squirrels, Rats, Muskrats	2.6	1.18	
00050063	24" x 7" x 8"	1" x 1" x 14 Gauge	Rabbits, Skunks, Larger Squirrels	5.0	2.27	
00051690	30" x 11" x 12"	1" x 1" x 14 Gauge	Racoons, Opossums, Cats	10.2	4.64	
00051700	36" x 11" x 12"	1" x 1" x 14 Gauge	Woodchucks, Large Cats, Larger Raccoons	11.7	5.31	
00052000	42" x 15" x 18"	1" x 1" x 12 Gauge	Foxes, Coyotes, Bobcats	24.6	11.16	
00050590	48" x 15" x 22"	1" x 2" x 12 Gauge	Dogs, Large Coyotes	29.1	13.20	

Professional Models (Heavier Duty Components for Extended life)

00053124	24" x 7" x 8"	1" x 1" x 14 Gauge	Skunks, Squirrels, Chipmunks	5.3	2.38	
00053130	30" x 11" x 12"	1" x 1" x 14 Gauge	Racoons, Opossums, Small Cats	11.5	5.19	
00053136	36" x 11" x 12"	1" x 1" x 14 Gauge	Woodchucks, Cats, Larger Raccoons	12.5	5.67	

00053219

00050063

00053215

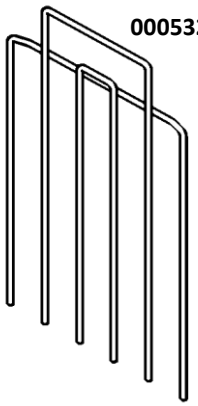

00053240

Trap Accessories

CATALOG #	ITEM DESCRIPTION Trap Size / Trap Mesh / Application	SHIP WEIGHT LBS.	SHIP WEIGHT KG.	LIST PRICE
00053645	15" & 18" Trap Cover - (Protect you and your Animal from Harm)	1.4	0.63	
00053219	24" Trap Cover - (Protect you and your Animal from Harm)	2.4	1.07	
00053215	30", 35" & 36" Trap Cover - (Protect you and your Animal from Harm)	5.0	2.27	
00053240	Trap Fork - (To Control the movement or separate multiple trapped animals)	2.0	0.91	
00054599	Door Liner 10 1/8" Plastic Wire Protector	0.0	0.01	

CALIFORNIA PROP 65 WARNING: This product contains chemicals known to the State of California to cause cancer and/or reproductive harm from exposure to lead and/or hexavalent chromium, and/or cobalt or nickel. See www.P65Warnings.com.

SECTION 46

Safeguard™
A VAL-CO™ Product

00052836

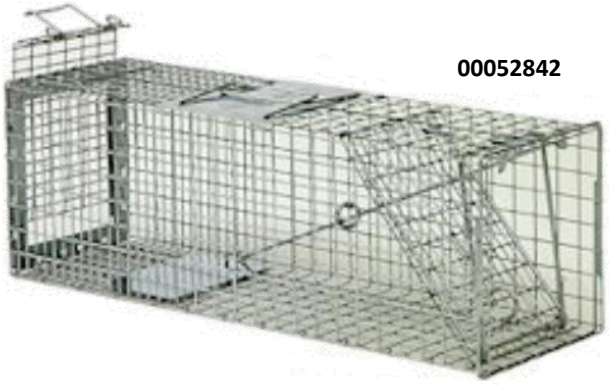

00052842

Rear Release Models

CATALOG #	ITEM DESCRIPTION Trap Size	Trap Mesh	Application	SHIP WEIGHT LBS.	SHIP WEIGHT KG.	LIST PRICE
00052818	18" x 5" x 5"	1/2" x 1" x 16 Gauge	Red Squirrels, Rats, Muskrats	3.0	1.36	
00052824	24" x 7" x 8"	1" x 1" x 14 Gauge	Rabbits, Skunks, Squirrels	5.7	2.59	
00052830	30" x 11" x 12"	1" x 1" x 14 Gauge	Racoons, Opossums, Cats	11.5	5.22	
00052836	36" x 11" x 12"	1" x 1" x 14 Gauge	Woodchucks, Larger Cats, Larger Raccoons	12.8	5.81	
00052842	42" x 15" x 18"	1" x 1" x 12 Gauge	Foxes, Coyotes, Bobcats	26.5	12.02	
00052848	48" x 15" x 22"	1" x 2" x 12 Gauge	Small Dogs, Larger Coyotes	31.8	14.42	
00052860	60" x 20" x 28"	1" x 1" x 12 Gauge	Medium Dog Sized Animals	54.5	24.72	
00052872	72" x 20" x 28"	1" x 1" x 12 Gauge	Large Dog Sized Animals	51.9	23.54	

Professional Models (Heavier Duty Components for Extended life)

00054124	24" x 7" x 8"	1" x 1" x 14 Gauge	Skunks, Squirrels, Chipmunks	6.0	2.72	
00054130	30" x 11" x 12"	1" x 1" x 14 Gauge	Racoons, Opossums, Small Cats	12.7	5.76	
00054136	36" x 11" x 12"	1" x 1" x 14 Gauge	Woodchucks, Cats, Larger Raccoons	14.5	6.58	

00050063

00053219

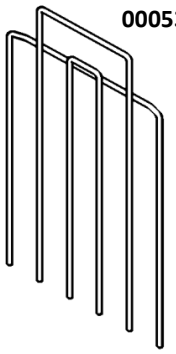

00053240

00053215

Trap Accessories

CATALOG #	ITEM DESCRIPTION Trap Size / Trap Mesh / Application	SHIP WEIGHT LBS.	SHIP WEIGHT KG.	LIST PRICE
00053645	15" & 18" Trap Cover - (Protect you and your Animal from Harm)	1.4	0.63	
00053219	24" Trap Cover - (Protect you and your Animal from Harm)	2.4	1.07	
00053240	Trap Fork - (To Control the movement or separate multiple trapped animals)	2.0	0.91	
00053215	30", 35" & 36" Trap Cover - (Protect you and your Animal from Harm)	5.0	2.27	
00054599	Door Liner 10 1/8" Plastic Wire Protector	0.0	0.01	

CALIFORNIA PROP 65 WARNING: This product contains chemicals known to the State of California to cause cancer and/or reproductive harm from exposure to lead and/or hexavalent chromium, and/or cobalt or nickel. See www.P65Warnings.com.

Toll-free: 1-800-99VALCO
Phone: (+1) 419-678-8731
Fax: (+1) 419-678-2200

SECTION 46

Safeguard™
A VAL-CO™ Product

00053000

00050460

00053110

Specialty Traps

CATALOG #	ITEM DESCRIPTION			SHIP WEIGHT		LIST PRICE
	Trap Size	Trap Mesh	Application	LBS.	KG.	
00053000	36" x 11" x 12"	1/2" x 1" x 14 Gauge	Burrowing Animals, Woodchucks, Skunks	14.5	6.58	
00053100	20" x 11" x 12"	1" x 1" x 14 Gauge	Top End Opening Animal Carrier	9.6	4.35	
00050460	18" x 36" x 18"	includes 00050466	Poultry Layer Cage	24.0	10.89	
00053120	3" x 3" x 10"	1/2" x 1" x 16 Gauge	Small Critters	1.0	0.45	
00053825	5" x 5" x 30"	1/2" x 1" x 16 Gauge	Controller Multi-Catch Extender	5.8	2.63	
00053110	5" x 5" x 12"	1/2" x 1" x 16 Gauge	Medium Critters	1.7	0.77	
00053820	3 1/2" x 3 1/2" x 24"	1/2" x 1" x 16 Gauge	Controller Multi-Catch Extender	2.0	0.91	

00053070

00016500

Rodent Traps

CATALOG #	ITEM DESCRIPTION			SHIP WEIGHT		LIST PRICE
	Trap Size	Trap Mesh	Application	LBS.	KG.	
00053070	10" x 3" x 3"	26 Gauge	Small rodents	0.9	0.41	
00017000	EZ-Set Molded Plastic Mouse Trap - Package of 2			0.3	0.11	
00016500	The Better Rodent Trap = 3 1/2" x 7 1/2"			0.4	0.18	

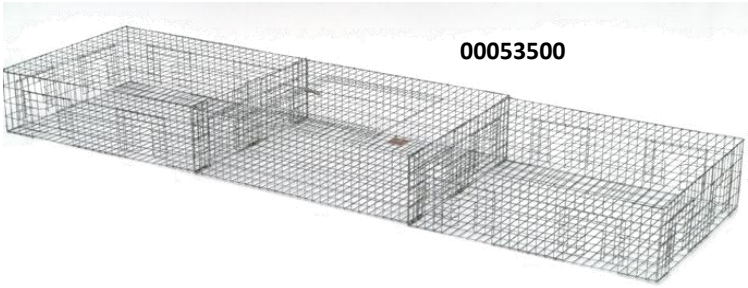

00053500

00053490

Bird Traps and Carriers

CATALOG #	ITEM DESCRIPTION			SHIP WEIGHT		LIST PRICE
	Trap Size	Trap Mesh	Application	LBS.	KG.	
00053490	28" x 24" x 8"	1" x 2" 14 Gauge	Up to 30 Pigeons	8.7	3.95	
00053500P	84" x 24" x 8"	2" x 1" x 14 Gauge	Folds to 25" x 25" x 29"	20.8	9.43	
00053835	24" x 16" x 10"	1/2" x 1" x 14 Gauge	Up to 40 Birds	9.4	4.26	

CALIFORNIA PROP 65 WARNING: This product contains chemicals known to the State of California to cause cancer and/or reproductive harm from exposure to lead and/or hexavalent chromium, and/or cobalt or nickel. See www.P65Warnings.com.

Toll-free: 1-800-99VALCO
Phone: (+1) 419-678-8731
Fax: (+1) 419-678-2200

SECTION 47
Displays and Samples

IN THIS CATALOG SECTION

PAGE NUMBER	CONTENTS
47-02	Flat Chain and Turkey Feeding
47-03	Pan Feeding - Broiler
47-04	Pan Feeding - Pullet and Breeder & Chick Feeders & Poly Hopper
47-05	Post Display
47-06	Line Display
47-07	Watering
47-08	Nesting and Oasis Cool Cell System
47-09	Signs and Flexible Auger

Toll-free: 1-800-99VALCO
Phone: (+1) 419-678-8731
Fax: (+1) 419-678-2200

VAL-CO DEALER SAMPLES AND DISPLAYS

Contact your VAL-CO Sales person to inquire about using AgVantage™ funds for displays

CHAIN FEEDING

CATALOG #	ITEM DESCRIPTION	SHIP WEIGHT LBS.	SHIP WEIGHT KG.	LIST PRICE
7701971	DISPLAY, CLEAR CHAIN **DISK** CORNER (18" x 24")	20.0	9.1	
7703580	DISPLAY, TROUGH/CORNER/GRILL **FLAT** CHAIN	55.0	24.9	

7701971

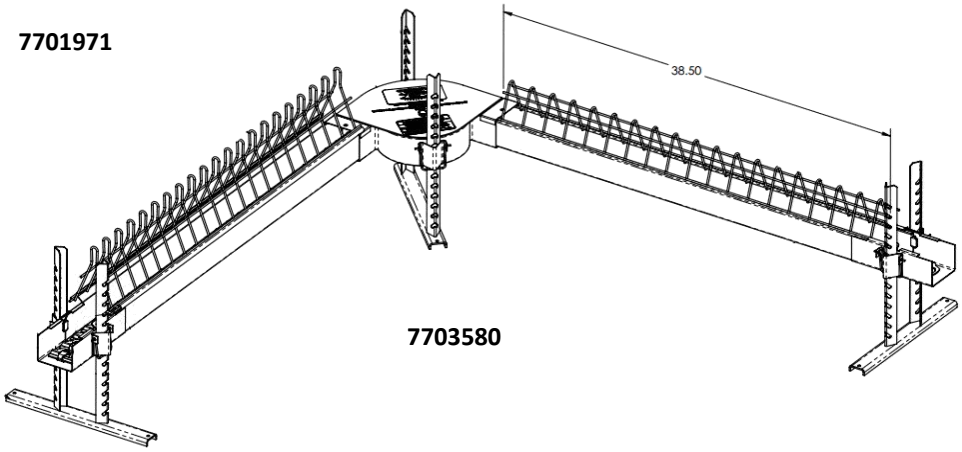

7703580

PAN FEEDING - TURKEY

CATALOG #	ITEM DESCRIPTION	SHIP WEIGHT LBS.	SHIP WEIGHT KG.	LIST PRICE
460229	Adult Turkey Pan Feeder Sample - with Tube	14.0	6.3	
460207	PEAK Turkey Poult Pan Feeder Sample - with Tube	2.0	0.9	
FE1800RS-SAMP	14" FUZE Pro 5-Spoke Standard Pan 2-Piece Sample - with Tube	2.5	1.1	
451012	Feed Tube Sample - 1.75" x 12" LOCK-SEAM with Cutout	0.8	0.4	
450179	Feed Tube Sample - 1.75" x 12" SMOOTH with Cutout	0.7	0.3	
460063	Turkey Tube Sample - 2" x 12" SMOOTH with Cutout	0.0	0.0	

460229

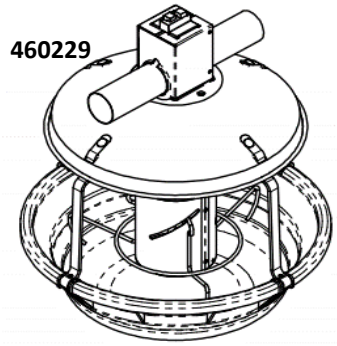

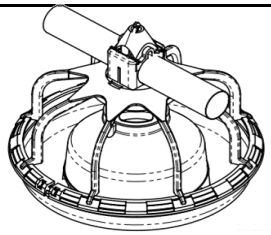

460207

451206

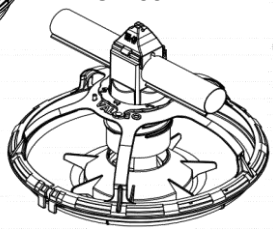

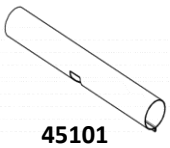

45101

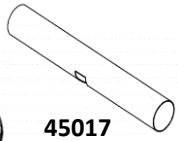

45017

460063

Toll-free: 1-800-99VALCO
Phone: (+1) 419-678-8731
Fax: (+1) 419-678-2200

VAL-CO DEALER SAMPLES AND DISPLAYS

Contact your VAL-CO Sales person to inquire about using AgVantage ™ funds for displays

PAN FEEDING - BROILER

CATALOG #	ITEM DESCRIPTION	SHIP WEIGHT LBS.	SHIP WEIGHT KG.	LIST PRICE
FE1500RS-SAMP-LS	FUZE Pro 13" Standard Pan Two-piece with tube	3.6	1.6	
FE1500RS-S-SAMP-LS	FUZE Pro 13" Standard Pan One-piece with tube	2.2	1.0	
FE1600RS-SAMP-LS	FUZE Pro 14" Standard Pan Two-piece with tube	3.6	1.6	
FE1600RS-S-SAMP-LS	FUZE Pro 14" Standard Pan One-piece with tube	2.6	1.2	
FE1800RS-SAMP-LS	FUZE Pro 14" Standard Pan Two-piece with tube - 5-spoke	3.6	1.6	
FE1800RS-S-SAMP-LS	FUZE Pro 14" Standard Pan One-piece with tube - 5-spoke	2.6	1.2	
FE1500RLS-SAMP-LS	FUZE Pro 13" Shallow Pan Two-piece with tube	3.5	1.6	
FE1500RLS-S-SAMP-LS	FUZE Pro 13" Shallow Pan One-piece with tube	2.2	1.0	
FE1600RLS-SAMP-LS	FUZE Pro 14" Shallow Pan Two-piece with tube	3.5	1.6	
FE1600RLS-S-SAMP-LS	FUZE Pro 14" Shallow Pan One-piece with tube	2.6	1.2	
FE1800RLS-SAMP-LS	FUZE Pro 14" Shallow Pan Two-piece with tube - 5-spoke	3.6	1.6	
FE1800RLS-S-SAMP-LS	FUZE Pro 14" Shallow Pan One-piece with tube - 5-spoke	2.6	1.2	
451012	Feed Tube Sample - 1.75" x 12" LOCK-SEAM with Cutout	0.8	0.4	
450179	Feed Tube Sample - 1.75" x 12" SMOOTH with Cutout	0.7	0.3	
451700-SAMP	FUZE V Easy Acess 2 piece tower no shutoff	2.5	1.1	
451705-SAMP	FUZE V Standard 2 piece tower no shutoff	2.8	1.3	
451710-SAMP	FUZE V Easy Acess 2 piece tower with shutoff	2.5	1.1	
451715-SAMP	FUZE V Standard 2 piece tower with shutoff	2.8	1.3	

13" FUZE Pro Shallow Pans

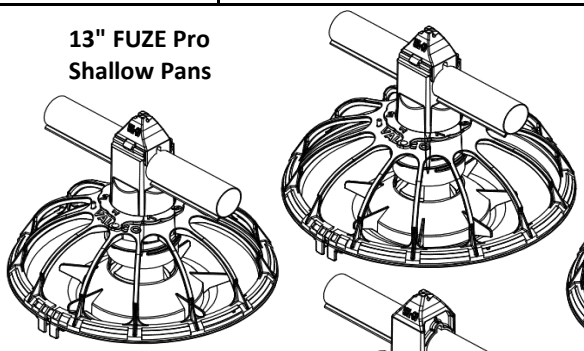

13" FUZE Pro Standard Pans

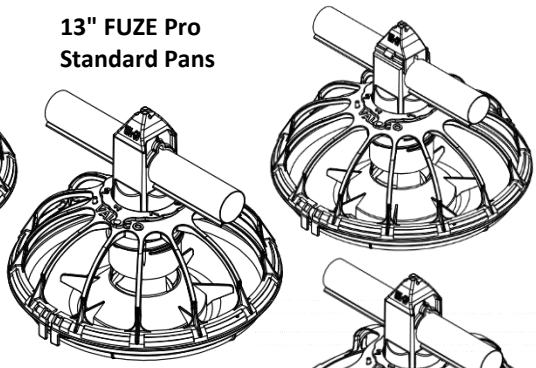

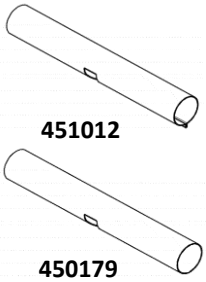

451012

450179

14" FUZE Pro Shallow Pans

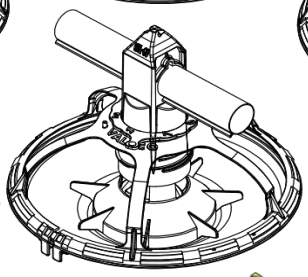

451715-SAMP

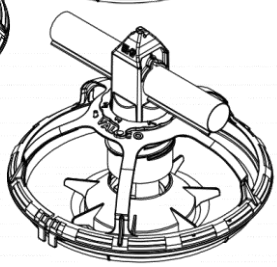

14" FUZE Pro Standard Pans

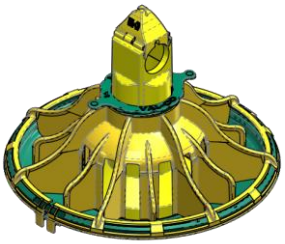

451700-SAMP

451705-SAMP

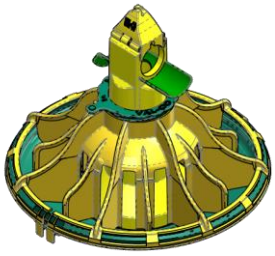

451710-SAMP

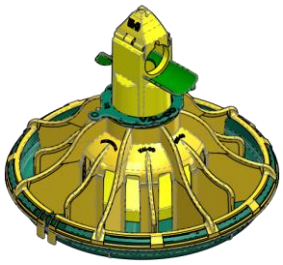

451715-SAMP

Toll-free: 1-800-99VALCO
Phone: (+1) 419-678-8731
Fax: (+1) 419-678-2200

VAL-CO DEALER SAMPLES AND DISPLAYS

Contact your VAL-CO Sales person to inquire about using AgVantage™ funds for displays

PAN FEEDING - PULLET AND BREEDER

CATALOG #	ITEM DESCRIPTION	SHIP WEIGHT LBS.	SHIP WEIGHT KG.	LIST PRICE
FE1800RS-1PSO	FUZE Pro 14" Standard Pan One-piece - 5-spoke with Shutoff	2.1	0.9	
FE1800RS-SO	FUZE Pro 14" Standard Pan Two-piece - 5-spoke with Shutoff	2.1	0.9	
FE1800RLS-1PSO	FUZE Pro 14" Shallow Pan One-piece - 5-spoke with Shutoff	2.1	0.9	
451206	PXR Hi-Cap (approx. 3#) Rooster Feed Pan Sample - Wire Grill	3.6	1.7	
451030	PXR Rooster Feed Pan Sample - Plastic Grill - with Shutoff	2.3	1.0	

FE1800RS-1PSO

FE1800RS-SO

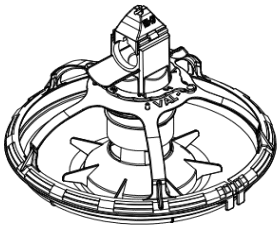

FE1800RLS-1PSO

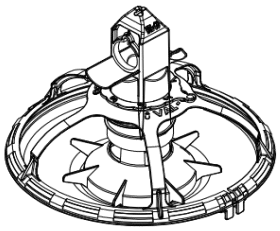

4512

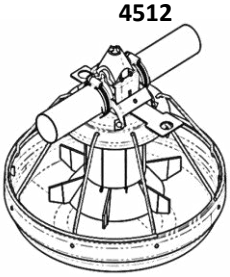

450130

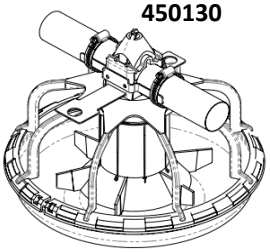

CHICK FEEDERS

820221	Clean Start Feeder	1.7	0.8	
820194	Ultra Start Feeder	1.4	0.6	
820192	Ultra Start Feeder Storage Kit	0.2	0.1	

820221

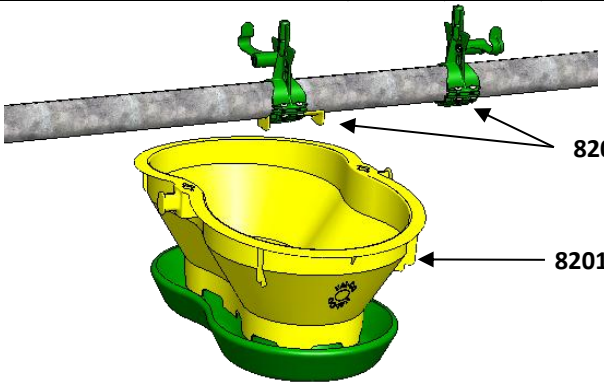

POLY HOPPER

7702317	Poly Hopper Display	76.0	34.5	

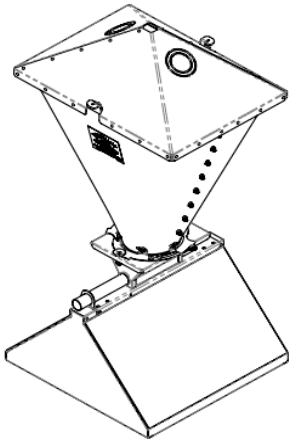

Toll-free: 1-800-99VALCO
Phone: (+1) 419-678-8731
Fax: (+1) 419-678-2200

VAL-CO DEALER SAMPLES AND DISPLAYS

Contact your VAL-CO Sales person to inquire about using AgVantage ™ funds for displays

Post Display

CATALOG #	ITEM DESCRIPTION	SHIP WEIGHT LBS.	SHIP WEIGHT KG.	LIST PRICE
7702060	Single Post Display (6 Pegs)	40.0	18.1	

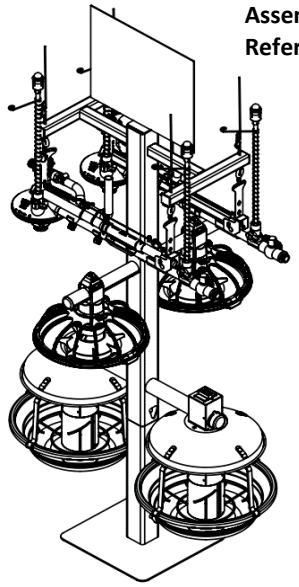

Assembled for Reference Only

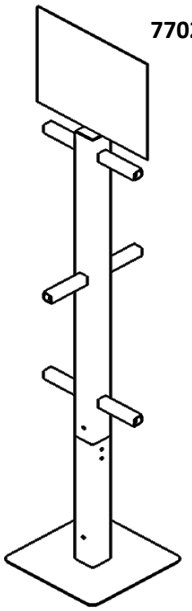

7702060

7702086

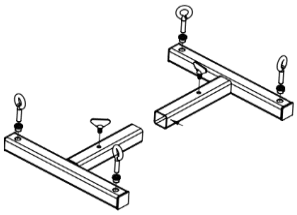

Choose Post Displays

CATALOG #	ITEM DESCRIPTION	SHIP WEIGHT LBS.	SHIP WEIGHT KG.	LIST PRICE
7702086	Water Line Hanger for Post Display (order 2 Watering Line Samples)	6.0	2.7	
7702080	11 7/8" Long Turkey Tube Assembly (Order 1 Adult Turkey Pan)	1.2	0.5	
7702081	11 1/2" Smooth Tube Assembly (Order 1 broiler, rooster, poult, or layer Feed Pan)	0.8	0.3	
7702083	11 1/2" Ribbed Tube Assembly (Order 1 broiler, rooster, poult, or layer Feed Pan)	2.6	1.2	
820012	Watering Display - 3' with Flushing intake - Conduit	5.8	2.6	
820189	Watering Display - 3' with Flushing intake - Aluminum Extrusion	9.9	4.5	

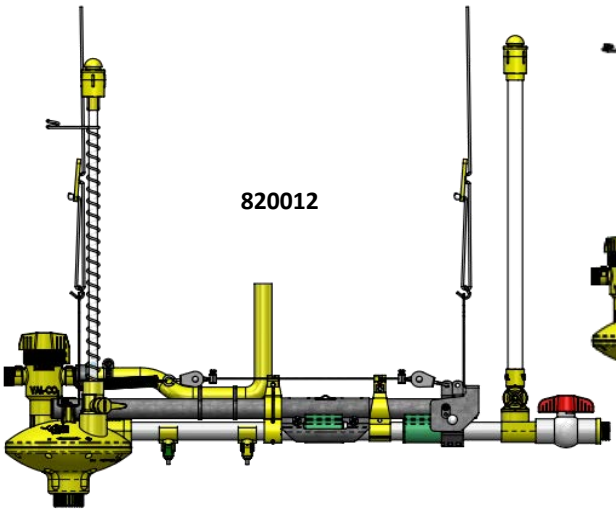

820012

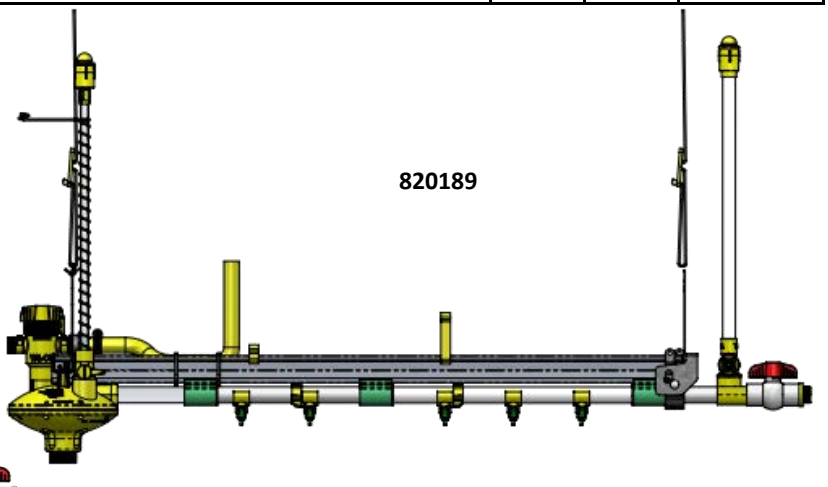

820189

Toll-free: 1-800-99VALCO
Phone: (+1) 419-678-8731
Fax: (+1) 419-678-2200

VAL-CO DEALER SAMPLES AND DISPLAYS

Contact your VAL-CO Sales person to inquire about using AgVantage ™ funds for displays

Line Display

CATALOG #	ITEM DESCRIPTION	SHIP WEIGHT LBS.	SHIP WEIGHT KG.	LIST PRICE
7702070	4 Line Display	89.0	40.4	

Choose Line Displays

CATALOG #	ITEM DESCRIPTION	SHIP WEIGHT LBS.	SHIP WEIGHT KG.	LIST PRICE
7702084	48" Adult Turkey Line Display (includes 2 Pans)	18.2	8.3	
7702085	48" Ribbed Tube Display (Order 2 broiler, rooster, poult, or layer Feed Pans)	3.6	1.6	
7702090	40" Turkey Bell Drinker Display	7.4	3.3	
7702091	40" Big Tom Water Line Display	3.0	1.4	
7702088	48" Watering Conduit Drinker Display	7.0	3.2	
7702089	48" Watering Aluminum Drinker Display	6.0	2.7	

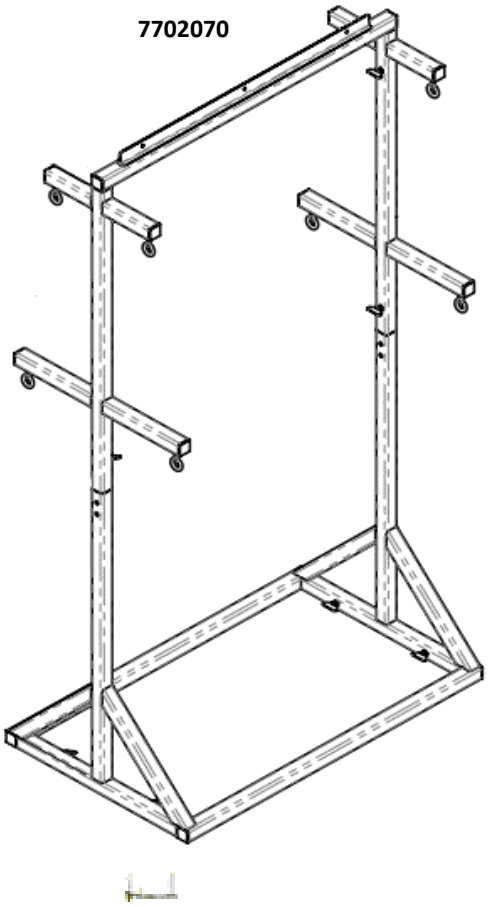

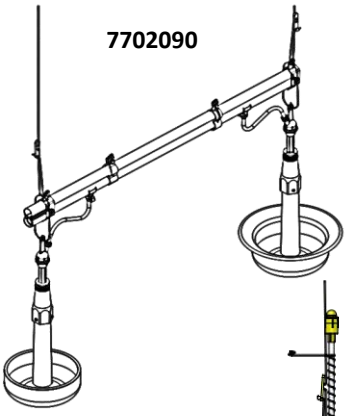

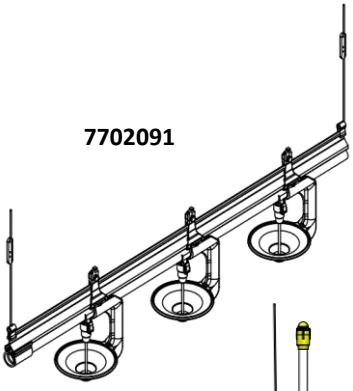

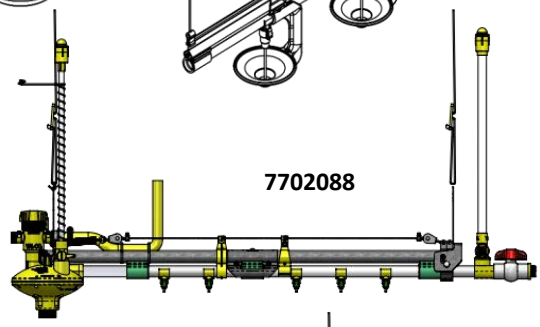

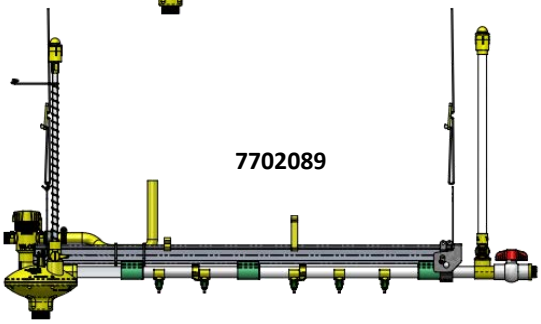

Toll-free: 1-800-99VALCO
Phone: (+1) 419-678-8731
Fax: (+1) 419-678-2200

VAL-CO DEALER SAMPLES AND DISPLAYS

Contact your VAL-CO Sales person to inquire about using AgVantage ™ funds for displays

Watering - Drinker Kits

CATALOG #	ITEM DESCRIPTION	SHIP WEIGHT LBS.	SHIP WEIGHT KG.	LIST PRICE
7701962	Drinker Sample Kit - 12 compartment - Floor Birds and adaptors	2.0	0.9	
7701967	Drinker Sample Kit - 24 compartment - Floor and Cage Birds and adaptors	3.0	1.4	

7701962

7701967

Watering - Drinker Kits

CATALOG #	ITEM DESCRIPTION	SHIP WEIGHT LBS.	SHIP WEIGHT KG.	LIST PRICE
820398	Sample Pipe 12" with coupler and (2) saddles	0.2	0.1	
SMPIPEBTOMSAMP	Sample Big Tom Drinker - Conduit	2.1	0.9	
SMPIPEBTOMALUMSAMP	Sample Big Tom Drinker - Al Extrusion	1.9	0.8	
SMPIPEALSAMP	Small Aluminum Pipe Sample	1.1	0.5	
820609	Viewport 3/4" PVC with VC145 Coupler	0.1	0.1	

820609

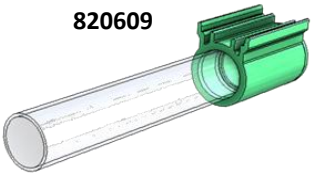

SMPIPEBTOMSAMP

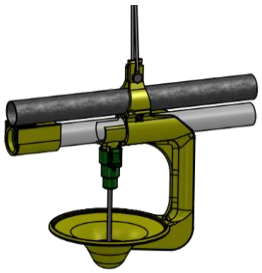

SMPIPEALSAMP

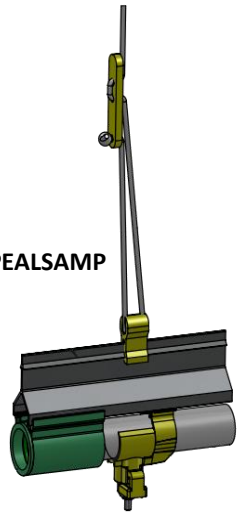

Toll-free: 1-800-99VALCO
Phone: (+1) 419-678-8731
Fax: (+1) 419-678-2200

VAL-CO DEALER SAMPLES AND DISPLAYS

Contact your VAL-CO Sales person to inquire about using AgVantage ™ funds for displays

Nesting

CATALOG #	ITEM DESCRIPTION	SHIP WEIGHT LBS.	SHIP WEIGHT KG.	LIST PRICE
417003	5" Outside Belt Nest Display one side shows a Standard Nest other side the Comfort Nest Also on the display is a Nest Lid Opening/Closing Kit and Egg Deflector Kit	74.0	33.6	

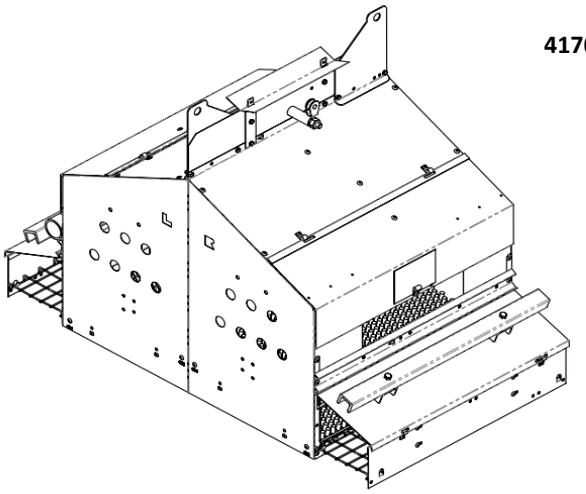

417003

Oasis Cool Cell System

CATALOG #	ITEM DESCRIPTION	SHIP WEIGHT LBS.	SHIP WEIGHT KG.	LIST PRICE
813070	Coolpad display - 2' section with pads, sign	39.2	17.8	

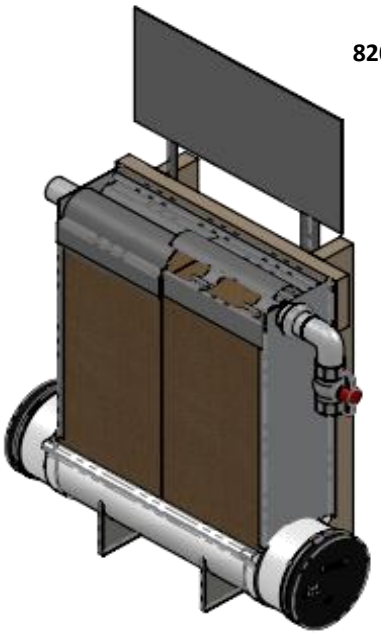

820398

Toll-free: 1-800-99VALCO
Phone: (+1) 419-678-8731
Fax: (+1) 419-678-2200

VAL-CO DEALER SAMPLES AND DISPLAYS

Contact your VAL-CO Sales person to inquire about using AgVantage™ funds for displays

Signs

CATALOG #	ITEM DESCRIPTION	SHIP WEIGHT LBS.	SHIP WEIGHT KG.	LIST PRICE
690450	Aluminum Sign - "VAL-CO" - 3' x 4'	15.0	6.8	
690479	Green Vinyl Banner- "VAL-CO" - 5' x 4'	1.9	0.8	
690480	White Vinyl Banner- "VAL-CO" - 5' x 4'	1.9	0.8	

690450

690479

690480

Flexible Auger Board

CATALOG #	ITEM DESCRIPTION	SHIP WEIGHT LBS.	SHIP WEIGHT KG.	LIST PRICE
725452	Flexible Auger Display Board (31" x 48")	63.5	28.8	

Toll-free: 1-800-99VALCO
Phone: (+1) 419-678-8731
Fax: (+1) 419-678-2200

VAL-CO DEALER SAMPLES AND DISPLAYS

Contact your VAL-CO Sales person to inquire about using AgVantage ™ funds for displays

Signs

CATALOG #	ITEM DESCRIPTION	SHIP WEIGHT LBS.	SHIP WEIGHT KG.	LIST PRICE
7703601	Mach 57" Fan Display - 110V standard plug included	459.0	208.2	
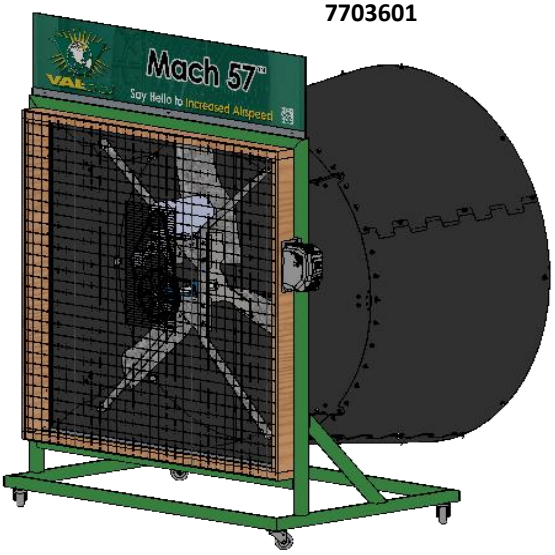
7703601