SECTION 02
FEED BINS

IN THIS CATALOG SECTION

PAGE NUMBER	CONTENTS
02-02	Bin Notes & Free-Flowing Material Notice
02-03	Lid Opener & Roof Choices
02-04	Bin Specifications
02-05 thru 02-06	Bin & Ladder Pricing
02-07	Tru-Lok Add-On Kits & Ladder Cages
02-08	Pneumatic Fill Options
02-09	Anchor Bolt Kits - Roof Vents - Miscellaneous Accessories
02-10	Anchor Bolt Kits - Taper Hopper Access Panels - 25" to 16" Extension Kits - Free Standing Transfer Hopper
02-11	Bin Extension Ring - Taper Hopper Repair Kits - Manual Slide Valves
02-12	16" Opening Attachments
02-13 thru 02-14	Model 506 - 6' Diameter Bins - Info & Component Requirements
02-15 thru 02-16	Model 507 - 7' Diameter Bins - Info & Component Requirements
02-17 thru 02-18	Model 509 - 9' Diameter Bins - Info & Component Requirements
02-19 thru 02-20	Model 512 - 12' Diameter Bins - Info & Component Requirements

RIGID AUGER

PAGE NUMBER	CONTENTS
02-21	Rigid Auger Length Determination Chart
02-22	4" & 6" Rigid Auger Capacities & Horsepower Requirements
02-23	Pulleys - V-Belts - Braces
02-24	Farm Duty Motors for Rigid Augers
02-25 thru 2-26	4" Rigid Auger Feed Delivery System Components
02-27 thru 2-28	6" Rigid Auger Feed Delivery System Components
02-29	Plastic Upper Boot Transitions

BIN REPAIRS

SEE REPAIR LISTING & REFERENCE MATERIAL IN SEPARATE PRODUCT MANUALS

WARRANTY & DISCLAIMERS

SEE CATALOG SECTION 01 TO REVIEW WARRANTY & DISCLAIMERS

BIN NOTES

- All 16" opening bins include Val-Co's exclusive 2-piece boot collar.
- Ladder safety cages are available - see pages 02-07.
- Boot collar is included with all 16" opening bins.
- Custom bin labels available with an annual purchase of 30 bins or more

IMPORTANT NOTICE

All bins are designed for the storage of free-flowing materials only.

Soybean meal, meat scraps, and certain other materials are not considered free-flowing and should not be stored in these bins.

Toll-free: 1-800-99VALCO
Phone: (+1) 419-678-8731
Fax: (+1) 419-678-2200

VAL-CO BIN OPENER & FILL OPTIONS

WAY-BACK
STANDARD LID OPENER

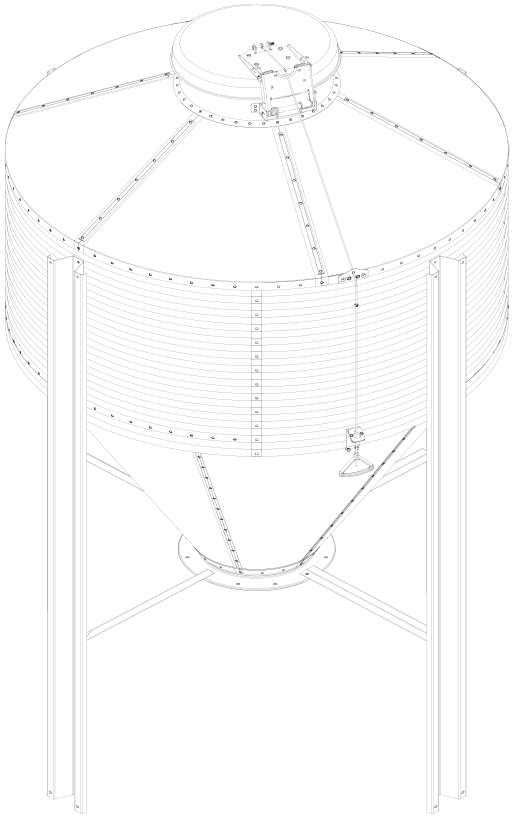

TRU-LOK
THIS IS AN OPTIONAL "ADD-ON" TO THE STANDARD WAY-BACK LID OPENER

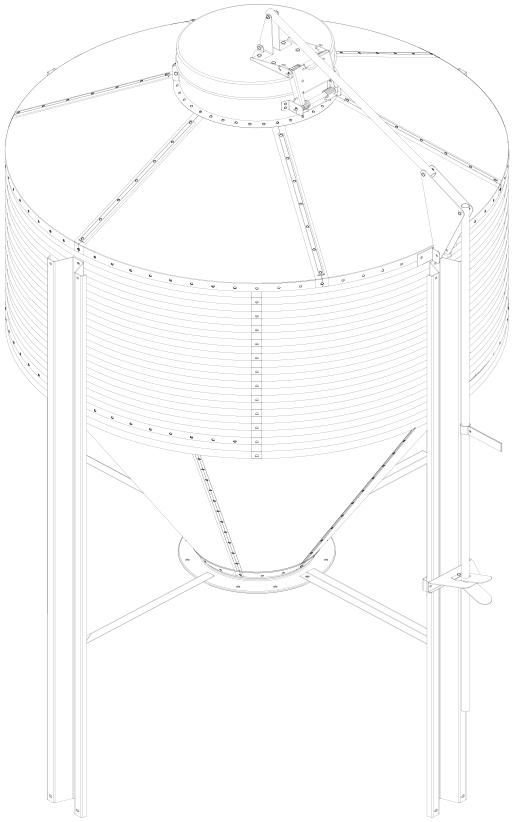

WITH PNEUMATIC FILL ROOF

BIN INCLUDES ONLY PREPUNCHED ROOF SECTIONS - ORDER PNEUMATIC FILL KIT & SIDE TUBE SEPARATELY

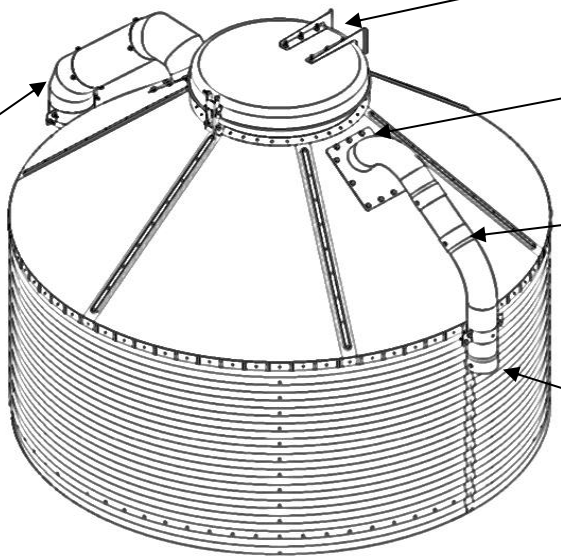

BIN LID OPENERS ARE NOT INCLUDED WITH PNEUMATIC FILL BIN

PREPUNCHED ROOF PANELS ARE INCLUDED WITH BIN FOR BOTH FILL & VENT TUBES

VENT TUBE IS NOT INCLUDED WITH BIN; IT IS INCLUDED WITH THE SEPARATELY ORDERED PNEUMATIC FILL KIT (ORDER PNEUMATIC FILL KIT FROM PAGE 02-08)

FILL TUBE IS NOT INCLUDED WITH BIN; IT IS INCLUDED WITH THE SEPARATELY ORDERED PNEUMATIC FILL KIT (ORDER PF KIT FROM PAGE 02-08)

SIDE FILL TUBE IS NOT INCLUDED WITH EITHER THE BIN OR SEPARATELY ORDERED PNEUMATIC FILL KIT - ORDER THIS TUBE SEPARATELY FROM PAGE 02-08

Toll-free: 1-800-99VALCO
Phone: (+1) 419-678-8731
Fax: (+1) 419-678-2200

WWW.VAL-CO.COM

6' - 7' - 9' - 12' DIAMETER FEED BIN SPECIFICATIONS

1.83m 2.13m 2.74m 3.66m

FEED BIN DIAMETER	NUMBER OF RINGS	APPROXIMATE CAPACITY (40#/CUBIC FT.)					FILL HEIGHT	
		2000 LB. TONS	METRIC TONS	CUBIC FEET	CUBIC METERS	BUSHELS	FEET	METERS
6' Dia. Weigh Bin 60º Taper Hopper **30º** Roof 16" Opening	1	2.68	2.43	134.0	3.79	108	10' 8"	3.03
	2	4.18	3.79	209.0	5.92	168	13' 4"	4.06
6' Diameter 60º Taper Hopper **40º** Roof 16" Opening	1	2.90	2.63	144.8	4.10	116	10' 11"	3.33
	2	4.40	4.00	220.2	6.24	177	13' 7"	4.14
	3	5.91	5.36	295.5	8.37	237	16' 3"	4.95
	4	7.42	6.73	370.9	10.50	298	18' 11"	5.77
7' Diameter 67º Taper Hopper 40º Roof 16" Opening Only	1	4.82	4.37	241.0	6.82	194	14' 7"	4.45
	2	6.87	6.23	343.5	9.73	276	17' 3"	5.26
	3	8.92	8.09	446.1	12.63	358	19' 11"	6.07
	4	10.97	9.95	548.7	15.54	441	22' 7"	6.88
	5	13.02	11.82	651.2	18.44	523	25' 3"	7.70
	6	15.08	13.68	753.8	21.34	606	27' 11"	8.51
9' Diameter 60º Taper Hopper 40º Roof 16" Opening	1	8.12	7.37	406.0	11.50	326	15' 6"	4.72
	2	11.51	10.44	575.6	16.30	463	18' 2"	5.54
	3	14.90	13.52	745.1	21.10	599	20' 10"	6.35
	4	18.29	16.60	914.7	25.90	735	23' 6"	7.16
	5	21.68	19.67	1084.2	30.70	871	26' 2"	7.98
	6	25.07	22.75	1253.7	35.50	1007	28' 10"	8.79
12' Diameter 60º Taper Hopper 40º Roof 16" Opening	1	17.32	15.72	866.2	24.53	696	19' 1"	5.82
	2	23.35	21.19	1167.6	33.06	938	21' 9"	6.63
	3	29.38	26.65	1469.1	41.60	1180	24' 5"	7.44
	4	35.41	32.12	1770.5	50.13	1423	27' 1"	8.26
	5	41.44	37.59	2071.9	58.67	1665	29' 9"	9.07
	6	47.47	43.06	2373.3	67.20	1907	32' 5"	9.88
	7	53.49	48.53	2674.7	75.74	2149	35' 1"	10.69

Updated:4/3/19

BIN NOTES

See important bin notes on page 02-02.

IMPORTANT NOTICE

All bins are designed for the storage of free-flowing materials only. Soybean meal, meat scraps, and certain other materials are not considered free-flowing and should not be stored in these bins.

Toll-free: 1-800-99VALCO
Phone: (+1) 419-678-8731
Fax: (+1) 419-678-2200

WWW.VAL-CO.COM

6' - 7' - 9' DIAMETER FEED BIN & LADDER PRICING

1.83m 2.13m 2.74m

6' DIAMETER BINS - 40º ROOF - 16" OPENING - 60º TAPER HOPPER

NUMBER OF RINGS	CATALOG NUMBER		FEED BIN			OPTIONAL LADDER			
	WAY-BACK OPENER	* PNEUMATIC FILL ROOF	SHIP WEIGHT LBS.	SHIP WEIGHT KGS.	FEED BIN LIST PRICE	CATALOG NUMBER	SHIP WEIGHT LBS.	SHIP WEIGHT KGS.	LADDER LIST PRICE
1	506W41	506741	458	208		506921	46	21	
2	506W42	506742	534	243		506922	55	25	
3	506W43	506743	612	278		506923	63	29	
4	506W44	506744	696	316		506924	72	33	

6' DIAMETER WEIGH BINS - 30º ROOF - 16" OPENING - 60º TAPER HOPPER

NUMBER OF RINGS	CATALOG NUMBER	SHIP WEIGHT		FEED BIN LIST PRICE	OPTIONAL LADDER			
	NO TOP LID (ROOF CAP INCLUDED)	LBS.	KGS.		CATALOG NUMBER	SHIP WEIGHT LBS.	SHIP WEIGHT KGS.	LADDER LIST PRICE
1	506301	#N/A	#N/A		506101	47	22	
2	506312	#N/A	#N/A		506102	56	26	

For feed scales, see catalog section 03.

7' DIAMETER BINS - 40º ROOF - 16" OPENING - 67º TAPER HOPPER

NUMBER OF RINGS	CATALOG NUMBER		SHIP WEIGHT		FEED BIN LIST PRICE	OPTIONAL LADDER			
	WAY-BACK OPENER	* PNEUMATIC FILL ROOF	LBS.	KGS.		CATALOG NUMBER	SHIP WEIGHT LBS.	SHIP WEIGHT KGS.	LADDER LIST PRICE
1	507W41	507741	722	328		507921	51	24	
2	507W42	507742	825	375		507922	60	28	
3	507W43	507743	972	441		507923	69	32	
4	507W44	507744	1076	489		507924	78	36	
5	507W45	507745	1302	591		507925	87	40	
6	507W46	507746	1406	638		507926	95	44	

9' DIAMETER BINS - 40º ROOF - 16" OPENING - 60º TAPER HOPPER

NUMBER OF RINGS	CATALOG NUMBER		SHIP WEIGHT		FEED BIN LIST PRICE	OPTIONAL LADDER			
	WAY-BACK OPENER	* PNEUMATIC FILL ROOF	LBS.	KGS.		CATALOG NUMBER	SHIP WEIGHT LBS.	SHIP WEIGHT KGS.	LADDER LIST PRICE
1	509W41	509741	1027	466		509921	61	28	
2	509W42	509742	1164	528		509922	69	32	
3	509W43	509743	1370	621		509923	78	36	
4	509W44	509744	1533	695		509924	87	40	
5	509W45	509745	1917	870		509925	96	44	
6	509W46	509746	2034	923		509926	105	48	

9' DIAMETER WEIGH BINS - 40º ROOF - 16" OPENING - 60º TAPER HOPPER

NUMBER OF RINGS	CATALOG NUMBER	SHIP WEIGHT		FEED BIN LIST PRICE	OPTIONAL LADDER			
	NO TOP LID (ROOF CAP INCLUDED)	LBS.	KGS.		CATALOG NUMBER	SHIP WEIGHT LBS.	SHIP WEIGHT KGS.	LADDER LIST PRICE
2	509352	1164	528		509922	69	32	
3	509353	1370	621		509923	78	36	
4	509354	1533	695		509924	87	40	
5	509355	1917	870		509925	96	44	

*PNEUMATIC FILL BINS

Pneumatic fill bins include top lid and roof panels for fill & vent tubes - pneumatic fill kit & fill tube are not included and must be ordered separately from page 02-08.

Toll-free: 1-800-99VALCO
Phone: (+1) 419-678-8731
Fax: (+1) 419-678-2200

12' DIAMETER FEED BIN & LADDER PRICING

12' DIAMETER BINS - 40º ROOF - 16" OPENING - 60º TAPER HOPPER

NUMBER OF RINGS	CATALOG NUMBER		SHIP WEIGHT		LIST PRICE	OPTIONAL LADDER			
	WAY-BACK OPENER	* PNEUMATIC FILL ROOF	LBS.	KGS.		CATALOG NUMBER	SHIP WEIGHT LBS.	SHIP WEIGHT KGS.	LIST PRICE
1	512W41	512741	2247	1020		512921	81	37	
2	512W42	512742	2422	1099		512922	90	41	
3	512W43	512743	2758	1252		512923	99	45	
4	512W44	512744	2998	1360		512924	108	49	
5	512W45	512745	3686	1672		512925	116	53	
6	512W46	512746	3965	1799		512926	125	57	
7	512W47	512747	4301	1951		512927	134	61	

*PNEUMATIC FILL BINS

Pneumatic fill bins include top lid and roof panels for fill & vent tubes - pneumatic fill kit & fill tube are not included and must be ordered separately from page 02-08.

Toll-free: 1-800-99VALCO
Phone: (+1) 419-678-8731
Fax: (+1) 419-678-2200

BIN ACCESSORIES

OPTIONAL TRU-LOK OPENER ADD-ON KIT

FOR BIN SIZE	CATALOG NUMBER	SHIP WEIGHT LBS.	SHIP WEIGHT KGS.	LIST PRICE
6' x 1 Ring	570641	20.6	9.3	
6' x 2 Ring	570642	22.6	10.3	
6' x 3 Ring	570643	24.6	11.2	
6' x 4 Ring	570644	26.6	12.1	
7' x 1 Ring	570741	21.8	9.9	
7' x 2 Ring	570742	23.8	10.8	
7' x 3 Ring	570743	28.8	13.1	
7' x 4 Ring	570744	30.8	14.0	
7' x 5 Ring	570745	32.8	14.9	
7' x 6 Ring	570746	34.8	15.8	
9' x 1 Ring	570941	22.6	10.3	
9' x 2 Ring	570942	24.6	11.2	
9' x 3 Ring	570943	29.6	13.4	
9' x 4 Ring	570944	31.6	14.3	
9' x 5 Ring	570945	33.6	15.2	
9' x 6 Ring	570946	35.6	16.1	
12' x 1 Ring	571241	25.7	11.7	
12' x 2 Ring	571242	25.7	11.7	
12' x 3 Ring	571243	25.7	11.7	
12' x 4 Ring	571244	25.7	11.7	
12' x 5 Ring	571245	25.7	11.7	
12' x 6 Ring	571246	25.7	11.7	
12' x 7 Ring	571247	25.7	11.7	

Add-on to Way-Back Lid Opener.

OPTIONAL LADDER CAGE

See Ladder Cage Safety Standards Below

FOR BIN SIZE	CATALOG NUMBER	SHIP WEIGHT LBS.	SHIP WEIGHT KGS.	LIST PRICE
6' x 1 Ring	500971	69	31	
6' x 2 Ring	500972	99	45	
6' x 3 Ring	500973	121	55	
6' x 4 Ring	500974	145	66	
7' x 1 Ring	500972	99	45	
7' x 2 Ring	500973	121	55	
7' x 3 Ring	500974	145	66	
7' x 4 Ring	500975	145	66	
7' x 5 Ring	500976	193	87	
7' x 6 Ring	500977	216	98	
9' x 1 Ring	500972	99	45	
9' x 2 Ring	500973	121	55	
9' x 3 Ring	500974	145	66	
9' x 4 Ring	500975	145	66	
9' x 5 Ring	500976	193	87	
9' x 6 Ring	500977	216	98	
12' x 1 Ring	500973	121	55	
12' x 2 Ring	500974	145	66	
12' x 3 Ring	500975	145	66	
12' x 4 Ring	500976	193	87	
12' x 5 Ring	500977	216	98	
12' x 6 Ring	500978	240	109	
12' x 7 Ring	500979	264	120	

Ladder must be ordered separately.

LADDER CAGE SAFETY STANDARDS

When properly installed, the VAL-CO feed bin ladder cage meets the requirements of the following safety standards:

OSHA: 1926.1053
*OSHA/CAL: Article 4, §3277**
*ANSI A14.3**
ISO 14122-4

Notes:

**OSHA/CAL: 12 ft, 7 ring feed bin ladder exceeds maximum single ladder height*

**ANSI: 12 ft, 7 ring feed bin ladder exceeds maximum single ladder height*

Rung spacing, cage width, and spacing of verticals meet NZ/AUS 1657

Reference the Ladder Cage Manual for more information on installation. These standards cover areas of the world such as the United States, Canada, and Europe. The purchaser assumes the responsibility of verifying that the product meets desired safety standards, including local standards, and installing the ladder cage to meet those safety standards.

Toll-free: 1-800-99VALCO
Phone: (+1) 419-678-8731
Fax: (+1) 419-678-2200

WWW.VAL-CO.COM

PNEUMATIC FILL OPTIONS

PNEUMATIC FILL KITS

CATALOG NUMBER	ITEM DESCRIPTION	SHIP WEIGHT LBS.	SHIP WEIGHT KGS.	LIST PRICE
506640	Pneumatic Fill Kit - 6' Bin	31.2	14.2	
507640	Pneumatic Fill Kit - 7' Bin	33.8	15.3	
509640	Pneumatic Fill Kit - 9' Bin	38.2	17.3	
512640	Pneumatic Fill Kit - 12' Bin	50.8	23.0	

Hopper Reinforcement Angles are recommended on 12' bins, and required on bins with 4 or more rings - order separately below.

SIDE FILL TUBES

CATALOG NUMBER	ITEM DESCRIPTION	SHIP WEIGHT LBS.	SHIP WEIGHT KGS.	LIST PRICE
704441	4" x 4' Galv. Tube Only	11.0	5.0	
704411	4" x 7' Galv. Tube Only	20.0	9.1	
704412	4" x 11' Galv. Tube Only	36.0	16.3	
704413	4" x 15' Galv. Tube Only	48.0	21.8	
704414	4" x 19' Galv. Tube Only	48.0	21.8	
704287	4" Tube Joiner Only With Hardware	3.0	1.4	

See tube recommendations below for 6', 7', 9', and 12' Bins

SIDE FILL TUBE RECOMMENDATIONS

4" Tubes → (see above)	704441	704411	704412	704413	704414	704287
BIN SIZE	QUANTITY REQUIRED					
6' x 1 Ring		1				
6' x 2 Ring		1				
6' x 3 Ring			1			
6' x 4 Ring				1		
7' x 1 Ring			1			
7' x 2 Ring			1			
7' x 3 Ring				1		
7' x 4 Ring					1	
7' x 5 Ring					1	
7' x 6 Ring	1				1	1

4" Tubes → (see above above)	704441	704411	704412	704413	704414	704287
BIN SIZE	QUANTITY REQUIRED					
9' x 1 Ring			1			
9' x 2 Ring			1			
9' x 3 Ring				1		
9' x 4 Ring					1	
9' x 5 Ring					1	
9' x 6 Ring	1				1	1
12' x 1 Ring			1			
12' x 2 Ring				1		
12' x 3 Ring				1		
12' x 4 Ring					1	
12' x 5 Ring	1				1	1
12' x 6 Ring		1			1	1
12' x 7 Ring		1			1	1

Toll-free: 1-800-99VALCO
Phone: (+1) 419-678-8731
Fax: (+1) 419-678-2200

WWW.VAL-CO.COM

FEED BIN ACCESSORIES

FILL SYSTEM LIDS

CATALOG #	ITEM DESCRIPTION	SHIP WEIGHT LBS.	SHIP WEIGHT KG.	LIST PRICE
506088	Weigh Bin Discharge Cap with Weather Hood	28.9	13.2	
506280	Twin Fill System Bin Cap	45.0	20.5	
506291	Twin Bin CAP Roof Deck Angle (Needed if Bin Roof Deck Does Not have Reinforcement Angles) 6 Required for 6' and 7' Bins 9 Required for 9' Bins 12 Required for 12' Bins	1.4	0.7	

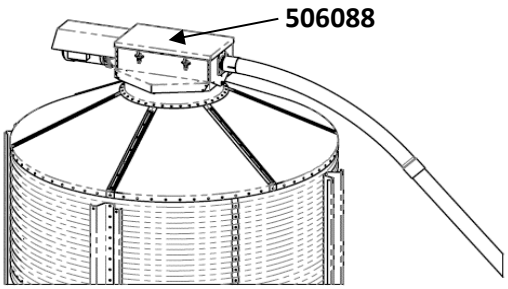

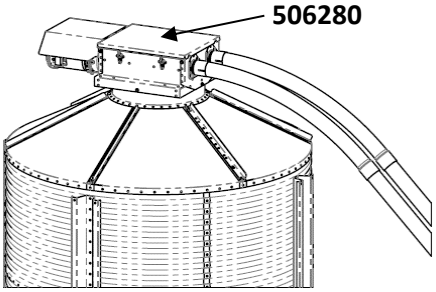

BIN ROOF VENTS

501396	Roof Vent Kit - 6' Bin	4.2	2.0	
501397	Roof Vent Kit - 7' Bin	6.8	3.1	
501398	Roof Vent Kit - 9' Bin	9.4	4.3	
501399	Roof Vent Kit - 12' Bin	12.6	5.8	

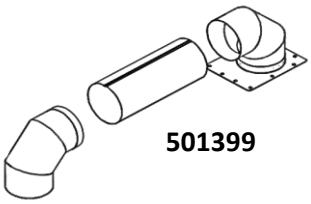

MISCELLANEOUS BIN ACCESSORIES

502003	Peek Thru Window	1.1	0.5	
500578	Bin Lifting Bracket Kit *DO NOT USE ON 12' BINS*	12.1	5.5	
500869	Way Back Bin Lid Adapter for Bin Opening 20-20.5"	9.0	4.1	
500868	Way Back Bin Lid with Adapter 500869	40.0	18.2	

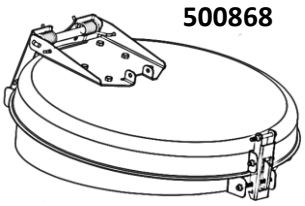

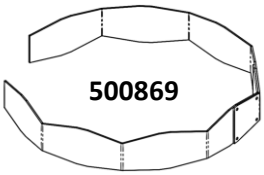

Toll-free: 1-800-99VALCO
Phone: (+1) 419-678-8731
Fax: (+1) 419-678-2200

WWW.VAL-CO.COM

FEED BIN ACCESSORIES

OPTIONAL ANCHOR BOLT KITS

CATALOG #	ITEM DESCRIPTION	SHIP WEIGHT LBS.	SHIP WEIGHT KG.	LIST PRICE
500220	Anchor Bolt Kit for 6' and 7' Diameter Bins	2.5	1.2	
500221	Anchor Bolt Kit for 9' Diameter Bins	4.0	1.9	
500388	Anchor Bolt Kit for 12' Diameter Bins	6.1	2.8	

25" TO 16" OPENING HOPPER EXTENSION KITS

509500	25" to 16" Opening Extension Kit With Boot Collar For Big "66", Big "99", Mini Bins and Other 60 Degree Taper Bins	30.0	13.7	
501180	25" to 16" Opening Extension Kit With Boot Collar - for 6' & 9' Bins	31.7	14.4	
501170	25" to 16" Opening Extension Kit Less Boot Collar - for 6' & 9' Bins	21.3	9.7	

Boot Safety Switch

730965	Boot Safety Switch - Mechanical 110-220v, 20 amp, 1 phase, 50-60hz	1.1	0.5	
455800	Boot Safety Switch Proximity switch, 0-60 sec. delay, adj. sensitivity, 1P/220v/50-60	4.0	1.8 0	

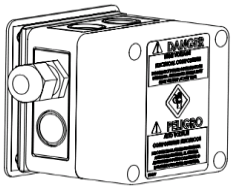

730965

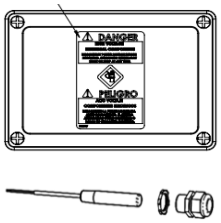

45580

Free Standing Transfer Hopper

500820	Free Standing Transfer Hopper - 300lb / 136Kg Capacity	70.0	31.8 0	
500840	Free Standing Transfer Hopper - Straight Out - 300lb / 136Kg Capacity	79.6	36.2 0	

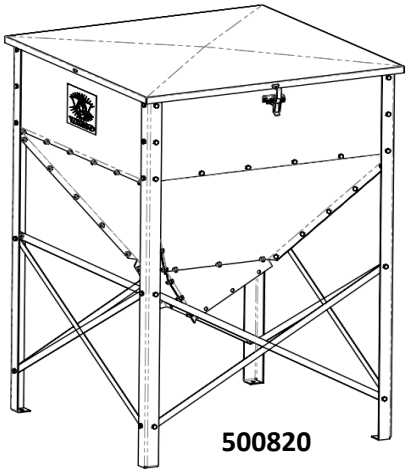

500820

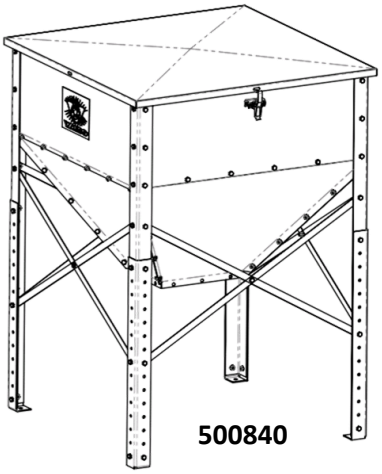

500840

Toll-free: 1-800-99VALCO
Phone: (+1) 419-678-8731
Fax: (+1) 419-678-2200

WWW.VAL-CO.COM

FEED BIN ACCESSORIES

BIN EXTENSION RINGS

CATALOG #	ITEM DESCRIPTION	SHIP WEIGHT LBS.	SHIP WEIGHT KG.	LIST PRICE
506090	1.50 ton 20 ga. Extension Ring With Hardware - 6' Bin	84.0	38.2	
507090	2.02 ton 20 ga. Extension Ring With Hardware - 7' Bin	94.0	42.7	
509090	3.40 ton 20 ga. Extension Ring With Hardware - 9' Bin	127.2	57.7	
509091	3.40 ton 18 ga. Extension Ring With Hardware - 9' Bin	163.2	74.1	
512090	6.71 ton 20 ga. Extension Ring With Hardware - 12' Bin	175.8	79.8	
512091	6.71 ton 14 ga. Extension Ring With Hardware - 12' Bin	335.8	152.4	
500191	Ladder Extension for 6', 7', 9' and 12' Bins	8.9	4.1	

Extension Rings and Ladder Extension are no longer available for Big "66" & "99" bins.

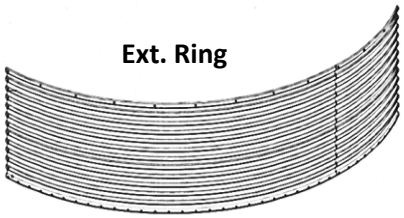

TAPER HOPPER REPAIR KITS

CATALOG #	ITEM DESCRIPTION	SHIP WEIGHT LBS.	SHIP WEIGHT KG.	LIST PRICE
506250	6' Bin Taper Hopper Repair Kit	95.1	43.2	
507250	7' Bin Taper Hopper Repair Kit	202.1	91.7	
509250	9' Bin Taper Hopper Repair Kit	267.7	121.5	
512250	12' Bin Taper Hopper Repair Kit	0.0	0.0	
500250	Big "66" Bin Taper Hopper Repair Kit	95.4	43.3	

Each kit includes complete set of taper hopper sections for 16" opening bin (25" for Big "66")and includes hardware for installation.Boot collar is not included.

SLIDE VALVES

CATALOG #	ITEM DESCRIPTION	SHIP WEIGHT LBS.	SHIP WEIGHT KG.	LIST PRICE
501190	Manual Slide Valve Assembly - 16"	22.5	10.2	
501997	Optional Rack & Pinion Crank Attachment for 501190 Slide Valve	8.0	3.7	
500621	Taper Hopper Slide Valve	11.1	5.1	
500471	16" Boot Slide Valve Assy (plastic upper boot transition required for installation)	6.0	2.7	

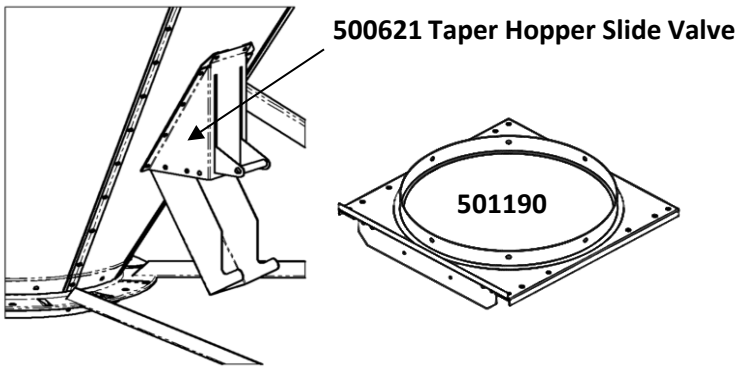

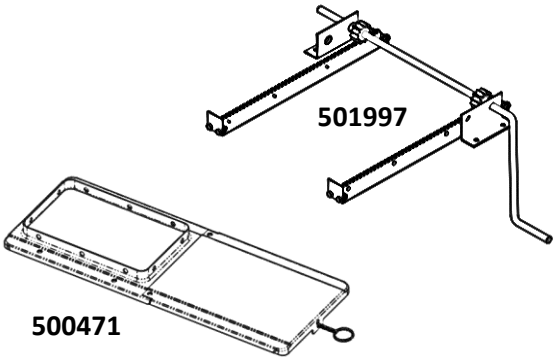

16" OPENING ATTACHMENTS

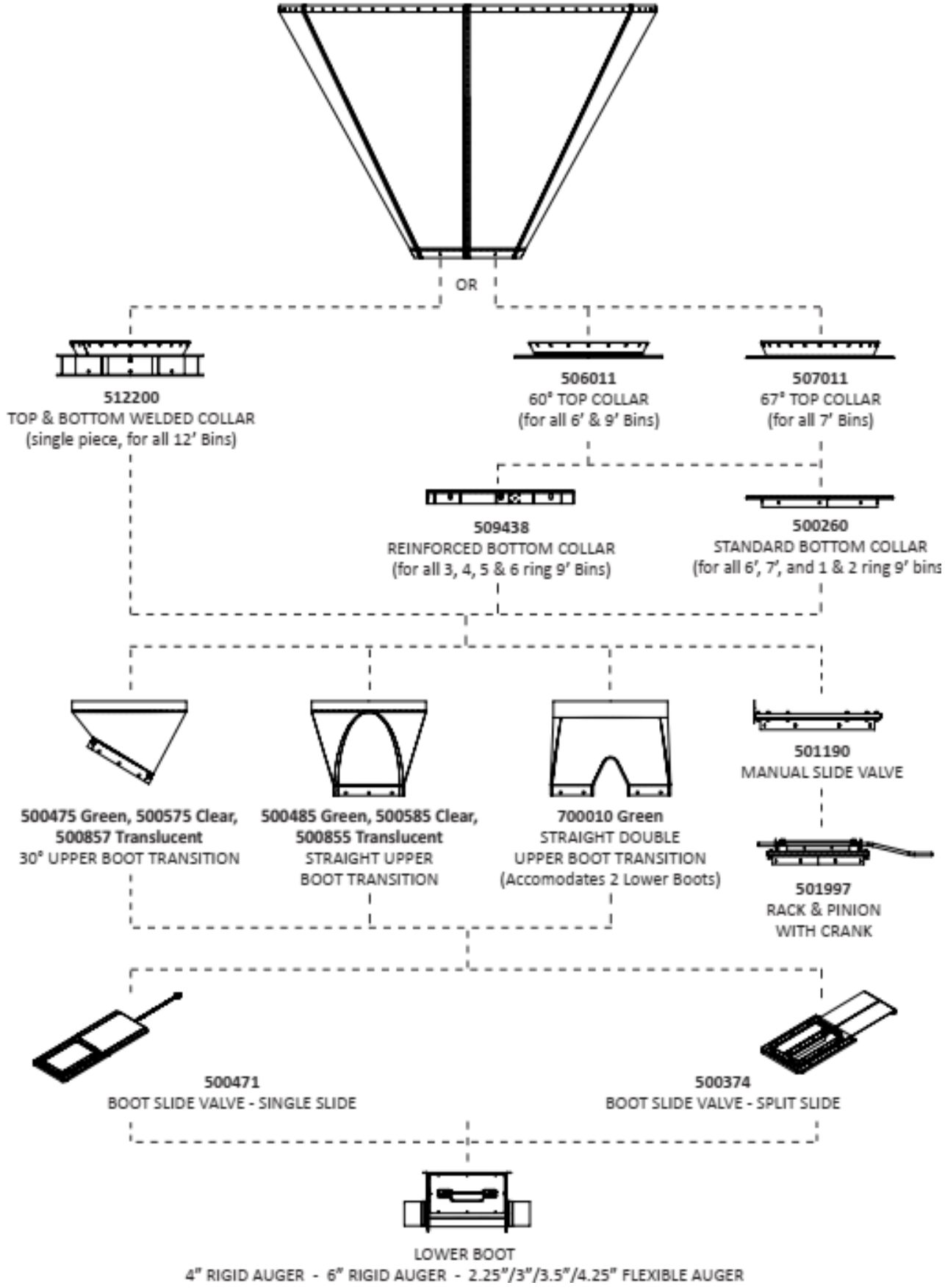

Toll-free: 1-800-99VALCO
Phone: (+1) 419-678-8731
Fax: (+1) 419-678-2200

MODEL 506 BIN - 6' DIAMETER

6' BIN DIMENSIONS

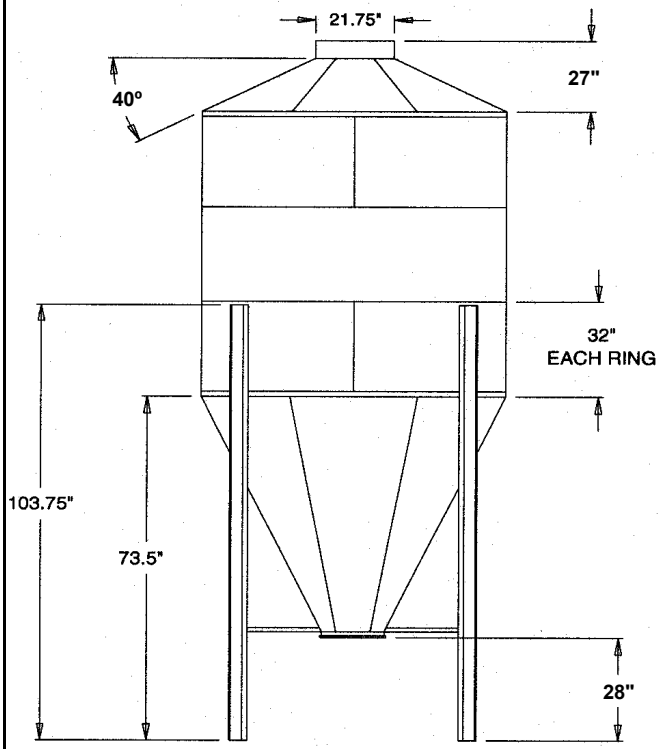

ANCHORING

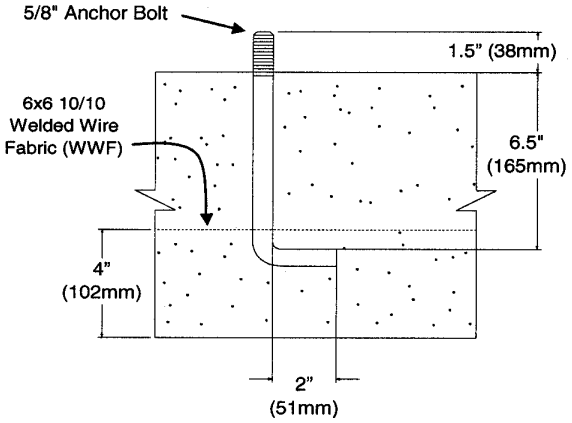

OPTIONAL ANCHOR BOLTS

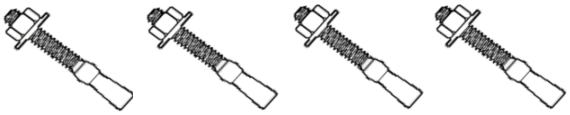

Optional style anchor bolts as shown above are available. Order catalog number 500220 (page 02-09) for 6' bins.

When using this type of anchor bolt, the holes may be drilled after the foundation is set. However, the dimensions for locating the bolts must be held to maintain squareness of the bin.

NOTE: Locating the anchor bolts by using the asembled bin does not assure that the bin will be square and can result in damage to equipment and/or personal injury.

FOUNDATION SPECIFICATIONS

Soil with a bearing capacity of 3500 pounds per square foot (psf) is required for bin foundation. A qualified soil engineer should be consulted if any questions arise. All bin foundations must be smooth and level. All concrete must have a minimum compressive strength of 3000 psi in 28 days. Concrete requirements shown below should be increased by 25" to allow for waste.

6' BIN PADS

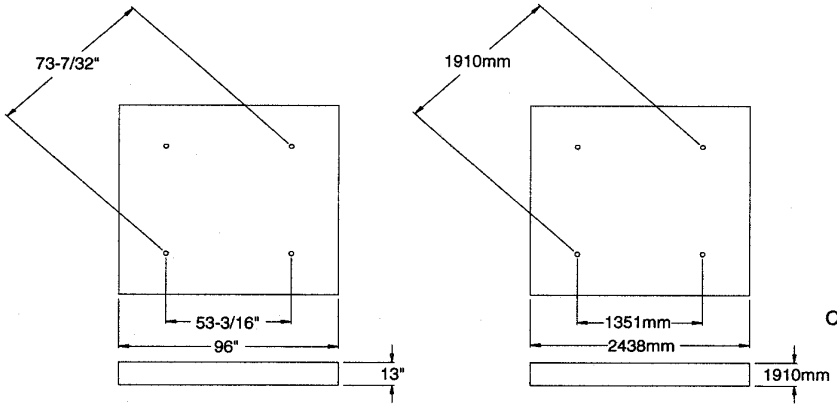

2.6 Yards of Concrete Required

2.6 Yards of Concrete Required

Toll-free: 1-800-99VALCO
Phone: (+1) 419-678-8731
Fax: (+1) 419-678-2200

WWW.VAL-CO.COM

MODEL 506 BIN - 6' DIAMETER
COMPONENTS REQUIREMENTS

6' DIAMETER BINS

			BIN SIZE & OPENING:			6' - 16" OPENING				6' - 16" OPENING				6' - 16"		6'
			OPENER TYPE:			WAY-BACK OPENER				PNEUMATIC FILL ROOF				WEIGH BIN		EXT
			NUMBER OF RINGS:			1	2	3	4	1	2	3	4	1	2	N/A
			ORDER NUMBER:			506W41	506W42	506W43	506W44	506741	506742	506743	506744	506301	506312	506090
CATALOG NUMBER		COMPONENT DESCRIPTION	LIST PRICE	SHIP WEIGHT LBS.	SHIP WEIGHT KGS.	QUANTITY REQUIRED				QUANTITY REQUIRED				QTY REQ'D		REQ'D
506009		20 ga. Main Hopper - Plain w/Drip Edge		40.0	18.2	1	2	2	2	1	2	2	2	1	2	0
506010		20 ga. Main Hopper - Decal w/Drip Edge		40.0	18.2	1	0	0	0	1	0	0	0	1	0	0
506007		20 ga. Extension Hopper - Plain		40.0	18.2	0	1	3	5	0	1	3	5	0	1	2
506008		20 ga. Extension Hopper - Decal		40.0	18.2	0	1	1	1	0	1	1	1	0	1	0
506024		Leg - 103.25"		38.0	17.3	4	4	4	4	4	4	4	4	4	4	0
506232		Leg-Collar Brace Angle		2.2	1.0	4	4	4	4	4	4	4	4	4	4	0
506423		Roof Deck Section 40º		9.5	4.4	6	6	6	6	4	4	4	4	0	0	0
506424		Roof Deck Section 40º - Pneumatic Fill		9.5	4.4	0	0	0	0	2	2	2	2	0	0	0
506023		Roof Deck Section 30º		7.3	3.4	0	0	0	0	0	0	0	0	6	6	0
506018		Taper Hopper Section - 16"		13.9	6.4	6	6	6	6	6	6	6	6	6	6	0
506160		Basic Hardware Carton		37.6	17.1	1	1	1	1	1	1	1	1	1	1	0
506072		Extension Hardware Carton		4.0	1.9	0	1	2	3	0	1	2	3	0	1	1
506171		Collar Carton		15.0	6.9	1	1	1	1	1	1	1	1	0	0	0
500650		Way-Back Lid Carton		32.0	14.6	1	1	1	1	0	0	0	0	0	0	0
500790		Lid Carton for Pneumatic Fill 40º		11.8	5.4	0	0	0	0	1	1	1	1	0	0	0
506088		Assembly Weigh Bin Discharge Cap w/ Weather Hood		28.9	13.2	0	0	0	0	0	0	0	0	1	1	0
506173		Collar Carton (Boot & Lid) 6' 30° Roof		15.0	6.9	0	0	0	0	0	0	0	0	1	1	0
OPTIONAL TRU-LOK ADD-ON	500775	Tru-Lok Accessory Carton 40º		10.8	4.9	1	1	1	1	1	1	1	1			
	506725	Tru-Lok Roof Tube - 6'		2.0	1.0	1	1	1	1	1	1	1	1			
	500226	Tru-Lok Basic Tube		5.0	2.3	1	1	1	1	1	1	1	1			
	500729	Tru-Lok Extension Tube		1.9	0.9	0	1	2	3	1	1	2	3			
OPTIONAL LADDER	500772	Basic Ladder 40º		36.3	16.5	1	1	1	1	1	1	1	1	1	1	
	500191	Extension Ladder		8.9	4.1	0	1	2	3	0	1	2	3	0	1	
	506034	Ladder Stand-Off Ring		2.7	1.3	1	1	1	1	1	1	1	1	1	1	
	506916	Roof Ladder 40º		7.2	3.3	1	1	1	1	1	1	1	1	1	1	
PNEUMATIC FILL OPTIONS	506640	Pneumatic Fill Kit - 6' Bin		31.2	14.2					1	1	1	1			
	704441	4" x 4' Galvanized Side Fill Tube		11.0	5.0					0	0	0	0			
	704411	4" x 7' Galvanized Side Fill Tube		20.0	9.1					1	1	0	0			
	704412	4" x 11' Galvanized Side Fill Tube		36.0	16.4					0	0	1	0			
	704413	4" x 15' Galvanized Side Fill Tube		48.0	21.8					0	0	0	1			
	704414	4" x 19' Galvanized Side Fill Tube		48.0	21.8					0	0	0	0			
	704287	4" Tube Joiner With Hardware		3.0	1.4					0	0	0	0			

FOR INDIVIDUAL REPAIR ITEMS FROM BUNDLES & CARTONS, PLEASE REFER TO PRODUCTMANUALS

MODEL 507 BIN - 7' DIAMETER

7' BIN DIMENSIONS

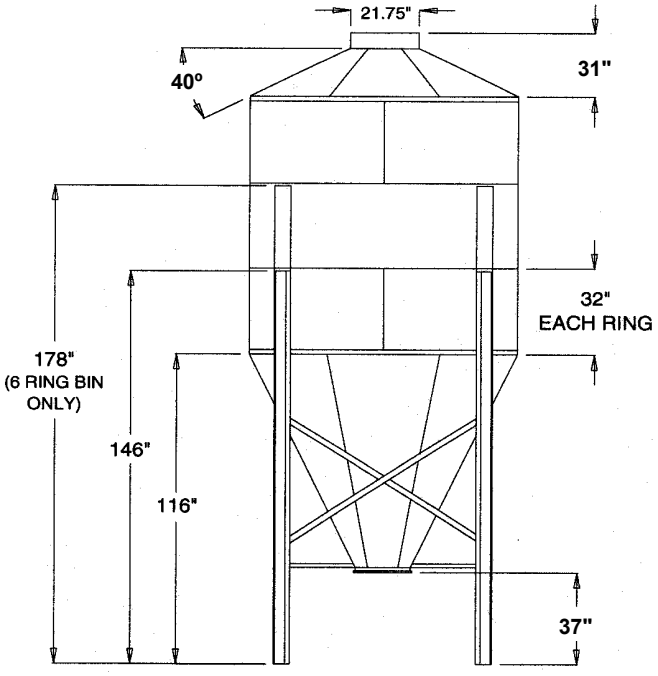

ANCHORING

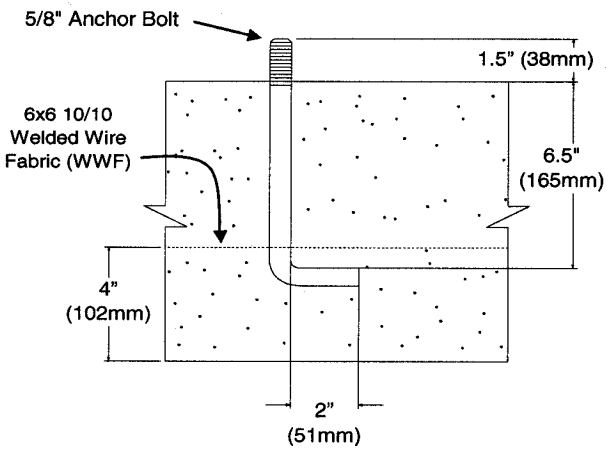

OPTIONAL ANCHOR BOLTS

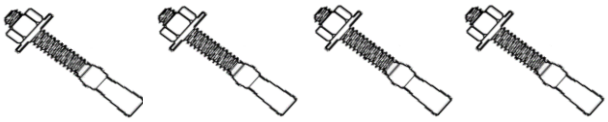

Optional style anchor bolts as shown above are available. Order catalog number 500220 (page 02-09) for 7' bins.

When using this type of anchor bolt, the holes may be drilled after the foundation is set. However, the dimensions for locating the bolts must be held to maintain squareness of the bin.

NOTE: Locating the anchor bolts by using the asembled bin does not assure that the bin will be square and can result in damage to equipment and/or personal injury.

FOUNDATION SPECIFICATIONS

Soil with a bearing capacity of 3500 pounds per square foot (psf) is required for bin foundation. A qualified soil engineer should be consulted if any questions arise. All bin foundations must be smooth and level. All concrete must have a minimum compressive strength of 3000 psi in 28 days. Concrete requirements shown below should be increased by 25" to allow for waste.

7' BIN PADS

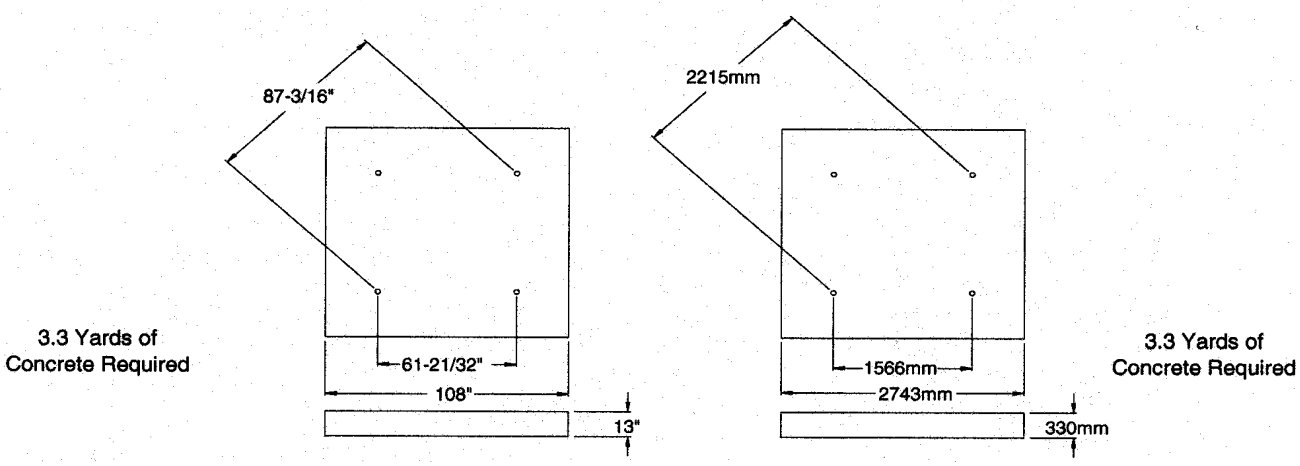

Toll-free: 1-800-99VALCO
Phone: (+1) 419-678-8731
Fax: (+1) 419-678-2200

MODEL 507 BIN - 7' DIAMETER COMPONENTS REQUIREMENTS

7' DIAMETER BINS

CATALOG NUMBER		COMPONENT DESCRIPTION	LIST PRICE	SHIP WEIGHT LBS.	SHIP WEIGHT KGS.	QUANTITY REQUIRED						QUANTITY REQUIRED						REQ'D
BIN SIZE & OPENING:						7' - 16" OPENING						7' - 16" OPENING						7'
OPENER TYPE:						WAY-BACK OPENER						PNEUMATIC FILL ROOF						EXT
NUMBER OF RINGS:						1	2	3	4	5	6	1	2	3	4	5	6	N/A
ORDER NUMBER:						507W41	507W42	507W43	507W44	507W45	507W46	507741	507742	507743	507744	507745	507746	507090
507046		18 ga. Main Hopper - Plain With Drip Edge		64.0	29.1	1	2	2	2	2	2	1	2	2	2	2	2	0
507047		18 ga. Main Hopper - Decal With Drip Edge		65.0	29.5	1	0	0	0	0	0	1	0	0	0	0	0	0
507016		18 ga. Main Hopper - Plain		64.0	29.1	0	0	0	0	2	2	0	0	0	0	2	2	0
507007		20 ga. Extension Hopper - Plain		50.0	22.7	0	1	3	5	5	7	0	1	3	5	5	7	2
507008		20 ga. Extension Hopper - Decal		50.0	22.7	0	1	1	1	1	1	0	1	1	1	1	1	0
507024		Galv. Leg - 146" (1-4R)		51.0	23.2	4	4	4	4	0	0	4	4	4	4	0	0	0
507039		Galv. Leg - 178" (5-6R)		64.0	29.1	0	0	0	0	4	4	0	0	0	0	4	4	0
507230		Front Cross Tie Brace Angle		5.9	2.7	4	4	4	4	0	0	4	4	4	4	0	0	0
507231		Rear Cross Tie Brace Angle		6.0	2.8	4	4	4	4	0	0	4	4	4	4	0	0	0
507232		Leg-Collar Brace Angle		2.6	1.2	4	4	4	4	4	4	4	4	4	4	4	4	0
507032		Brace Tie		3.0	1.4	0	0	0	0	8	8	0	0	0	0	8	8	0
507033		"X" Brace		4.9	2.3	0	0	0	0	8	8	0	0	0	0	8	8	0
509167		Special Bracing Hardware Bag		1.7	0.8	0	0	0	0	1	1	0	0	0	0	1	1	0
507423		Roof Deck Section 40º		13.0	5.9	6	6	6	6	6	6	4	4	4	4	4	4	0
507424		Roof Deck Section 40º - Pneumatic Fill		13.0	5.9	0	0	0	0	0	0	2	2	2	2	2	2	0
507018		Taper Hopper Section		31.0	14.1	6	6	6	6	6	6	6	6	6	6	6	6	0
507049		TH Reinforcement Angle		7.0	3.2	0	0	6	6	6	6	0	0	6	6	6	6	0
507160		Basic Hardware Carton		45.6	20.7	1	1	1	1	1	1	1	1	1	1	1	1	0
509163		178" Leg Hardware Carton		3.6	1.7	0	0	0	0	1	1	0	0	0	0	1	1	0
507072		Extension Hardware Carton		4.2	1.9	0	1	2	3	4	5	0	1	2	3	4	5	1
507171		Collar Carton		15.4	7.0	1	1	1	1	1	1	1	1	1	1	1	1	0
500650		Way-Back Lid Carton		32.0	14.6	1	1	1	1	1	1	0	0	0	0	0	0	0
500790		Lid Carton for Pneumatic Fill 40º		11.8	5.4	0	0	0	0	0	0	1	1	1	1	1	1	0
OPTIONAL TRU-LOK ADD-ON	500775	Tru-Lok Accessory Carton 40º		10.8	4.9	1	1	1	1	1	1							
	507727	Tru-Lok Roof Tube - 7' 40º		2.8	1.3	1	1	1	1	1	1							
	500226	Tru-Lok Basic Tube		5.0	2.3	1	1	1	1	1	1							
	500729	Tru-Lok Extension Tube		1.9	0.9	1	2	3	4	5	6							
	500728	Tru-Lok Tube Guide (3-6 Ring)		2.5	1.2	0	0	1	1	1	1							
OPTIONAL LADDER	500772	Basic Ladder 40º		36.3	16.5	1	1	1	1	1	1	1	1	1	1	1	1	
	500191	Extension Ladder		8.9	4.1	1	2	3	4	5	6	1	2	3	4	5	6	
	507034	Ladder Stand-Off Ring		3.2	1.5	1	1	1	1	1	1	1	1	1	1	1	1	
	507916	Roof Ladder 40º		9.4	4.3	1	1	1	1	1	1	1	1	1	1	1	1	
PNEUMATIC FILL OPTIONS	507640	Pneumatic Fill Kit - 7' Bin		33.8	15.4							1	1	1	1	1	1	
	704441	4" x 4' Galvanized Side Fill Tube		11.0	5.0							0	0	0	0	0	1	
	704411	4" x 7' Galvanized Side Fill Tube		20.0	9.1							0	0	0	0	0	0	
	704412	4" x 11' Galvanized Side Fill Tube		36.0	16.4							1	1	0	0	0	0	
	704413	4" x 15' Galvanized Side Fill Tube		48.0	21.8							0	0	1	0	0	0	
	704414	4" x 19' Galvanized Side Fill Tube		48.0	21.8							0	0	0	1	1	1	
	704287	4" Tube Joiner With Hardware		3.0	1.4							0	0	0	0	0	1	

FOR INDIVIDUAL REPAIR ITEMS FROM BUNDLES & CARTONS, PLEASE REFER TO PRODUCTMANUALS

Toll-free: 1-800-99VALCO
Phone: (+1) 419-678-8731
Fax: (+1) 419-678-2200

MODEL 509 BIN - 9' DIAMETER (40º ROOF)

9' BIN DIMENSIONS

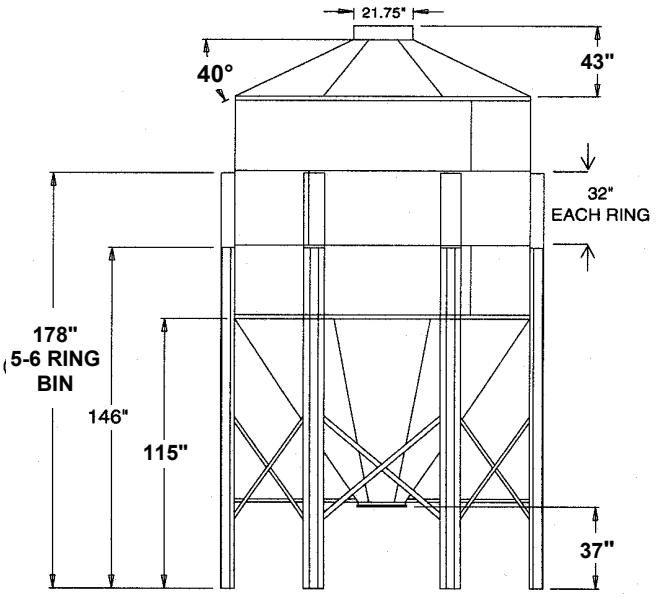

ANCHORING

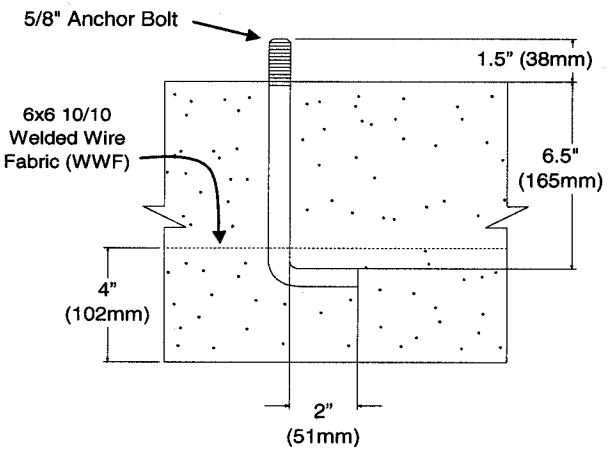

OPTIONAL ANCHOR BOLTS

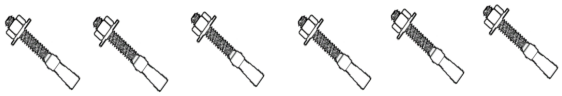

Optional style anchor bolts as shown above are available. Order catalog number 500221 (page 02-09) for 9' bins.

When using this type of anchor bolt, the holes may be drilled after the foundation is set. However, the dimensions for locating the bolts must be held to maintain squareness of the bin.

NOTE: Locating the anchor bolts by using the asembled bin does not assure that the bin will be square and can result in damage to equipment and/or personal injury.

FOUNDATION SPECIFICATIONS

Soil with a bearing capacity of 3500 pounds per square foot (psf) is required for bin foundation. A qualified soil engineer should be consulted if any questions arise. All bin foundations must be smooth and level. All concrete must have a minimum compressive strength of 3000 psi in 28 days. Concrete requirements shown below should be increased by 25" to allow for waste.

9' BIN PADS

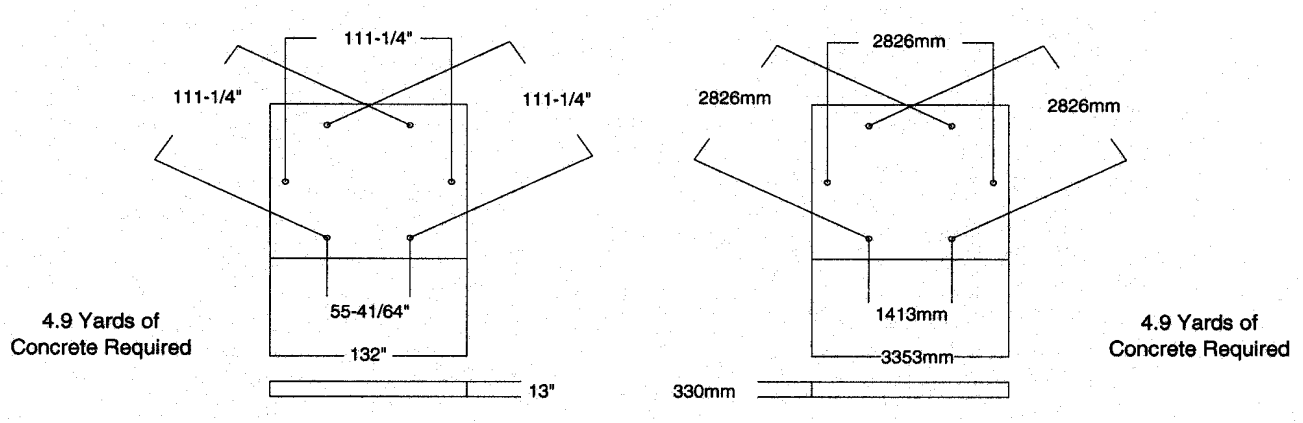

Toll-free: 1-800-99VALCO
Phone: (+1) 419-678-8731
Fax: (+1) 419-678-2200

MODEL 509 BIN - 9' DIAMETER (40º ROOF) COMPONENTS REQUIREMENTS

9' DIAMETER BINS

					BIN SIZE & OPENING:	9' - 16" OPENING						9' - 16" OPENING						9'	
					OPENER TYPE:	WAYBACK OPENER						PNEUMATIC						EXT	
					NUMBER OF RINGS:	1	2	3	4	5	6	1	2	3	4	5	6	N/A	N/A
					ORDER NUMBER:	509W41	509W42	509W43	509W44	509W45	509W46	509741	509742	509743	509744	509745	509746	509090	509091
CATALOG NUMBER		COMPONENT DESCRIPTION	LIST PRICE	SHIP WEIGHT LBS.	SHIP WEIGHT KGS.	QUANTITY REQUIRED						QUANTITY REQUIRED						QTY REQ'D	
509038		20 ga. Main Hopper - Plain w/Drip Edge		40.0	18.2	2	3	3	0	0	0	2	3	3	0	0	0	0	0
509039		20 ga. Main Hopper - Decal w/Drip Edge		40.0	18.2	1	0	0	0	0	0	1	0	0	0	0	0	0	0
509037		18 ga. Main Hopper - Plain w/Drip Edge		52.0	23.6	0	0	0	3	0	0	0	0	0	3	0	0	0	0
509011		18 ga. Main Hopper - Plain		52.0	23.6	0	0	0	0	3	3	0	0	0	0	3	3	0	0
509035		16 ga. Main Hopper - Plain w/Drip Edge		67.0	30.4	0	0	0	0	3	3	0	0	0	0	3	3	0	0
509008		20 ga. Extension Hopper - Plain		40.0	18.2	0	2	5	8	5	8	0	2	5	8	5	8	3	0
509009		20 ga. Extension Hopper - Decal		40.0	18.2	0	1	1	1	1	1	0	1	1	1	1	1	0	0
509014		18 ga. Extension Hopper - Plain		52.0	23.6	0	0	0	0	3	3	0	0	0	0	3	3	0	3
507024		Galv. Leg - 146" (1-4R)		51.0	23.2	6	6	6	6	0	0	6	6	6	6	0	0	0	0
507039		Galv. Leg - 178" (5-6R)		64.0	29.1	0	0	0	0	6	6	0	0	0	0	6	6	0	0
509230		Front Cross Tie Angle		5.4	2.5	6	6	6	6	0	0	6	6	6	6	0	0	0	0
509231		Rear Cross Tie Angle		5.4	2.5	6	6	6	6	0	0	6	6	6	6	0	0	0	0
509232		Leg-Collar Brace Angle		3.4	1.6	6	6	6	6	6	6	6	6	6	6	6	6	0	0
509032		Brace Tie		4.7	2.2	0	0	0	0	12	12	0	0	0	0	12	12	0	0
507033		"X" Brace		4.9	2.3	0	0	0	0	12	12	0	0	0	0	12	12	0	0
509167		Special Bracing Hardware Bag		1.7	0.8	0	0	0	0	1	1	0	0	0	0	1	1	0	0
509423		Roof Deck Section (40º Roof)		15.0	6.9	9	9	9	9	9	9	7	7	7	7	7	7	0	0
509424		Roof Deck Section - Pneumatic Fill 40º		14.7	6.7	0	0	0	0	0	0	2	2	2	2	2	2	0	0
509018		Taper Hopper Section 16"		32.0	14.6	9	9	9	9	9	9	9	9	9	9	9	9	0	0
509041		TH Reinforcement Angle		7.7	3.5	0	0	9	9	9	9	0	0	9	9	9	9	0	0
509160		Basic Hardware Carton		53.0	24.1	1	1	1	1	1	1	1	1	1	1	1	1	0	0
509059		Basic Caulking Carton		11.9	5.5	1	1	1	1	1	1	1	1	1	1	1	1	0	0
509163		178" Leg Hardware Carton		3.6	1.7	0	0	0	0	1	1	0	0	0	0	1	1	0	0
509072		Extension Hardware Carton		7.2	3.3	0	1	2	3	4	5	0	1	2	3	4	5	1	1
506171		Collar Carton		15.0	6.9	1	1	0	0	0	0	1	1	0	0	0	0	0	0
509440		Reinforced Collar Carton		25.0	11.4	0	0	1	1	1	1	0	0	1	1	1	1	0	0
500650		Way-Back Lid Carton		32.0	14.6	1	1	1	1	1	1	0	0	0	0	0	0	0	0
500790		Lid Carton for Pneumatic Fill 40º		11.8	5.4	0	0	0	0	0	0	1	1	1	1	1	1	0	0
OPTIONAL TRU-LOK ADD-ON	500775	Tru-Lok Accessory Carton		10.8	4.9	1	1	1	1	1	1								
	509727	Tru-Lok 40º Roof Tube - 9'		3.4	1.6	1	1	1	1	1	1								
	500226	Tru-Lok Basic Tube		5.0	2.3	1	1	1	1	1	1								
	500729	Tru-Lok Extension Tube		1.9	0.9	1	2	3	4	5	6								
	500728	Tru-Lok Tube Guide (3-6 Ring)		2.5	1.2	0	0	1	1	1	1								
OPTIONAL LADDER	500772	Basic Ladder - 40º Roof		36.3	16.5	1	1	1	1	1	1	1	1	1	1	1	1		
	500191	Extension Ladder		8.9	4.1	1	2	3	4	5	6	1	2	3	4	5	6		
	509034	Ladder Stand-Off Rail		3.0	1.4	1	1	1	1	1	1	1	1	1	1	1	1		
	509916	Roof Ladder - 40º Roof		12.1	5.6	1	1	1	1	1	1	1	1	1	1	1	1		
PNEUMATIC FILL OPTIONS	509640	Pneumatic Fill Kit - 9' Bin (40º Roof)		38.2	17.4							1	1	1	1	1	1		
	704441	4" x 4' Galvanized Side Fill Tube		11.0	5.0							0	0	0	0	0	1		
	704411	4" x 7' Galvanized Side Fill Tube		20.0	9.1							0	0	0	0	0	0		
	704412	4" x 11' Galvanized Side Fill Tube		36.0	16.4							1	1	0	0	0	0		
	704413	4" x 15' Galvanized Side Fill Tube		48.0	21.8							0	0	1	0	0	0		
	704414	4" x 19' Galvanized Side Fill Tube		48.0	21.8							0	0	0	1	1	1		
	704287	4" Tube Joiner With Hardware		3.0	1.4							0	0	0	0	0	1		

FOR INDIVIDUAL REPAIR ITEMS FROM BUNDLES & CARTONS, PLEASE REFER TO PRODUCTMANUALS

Toll-free: 1-800-99VALCO
Phone: (+1) 419-678-8731
Fax: (+1) 419-678-2200

MODEL 512 BIN - 12' DIAMETER

12' BIN DIMENSIONS

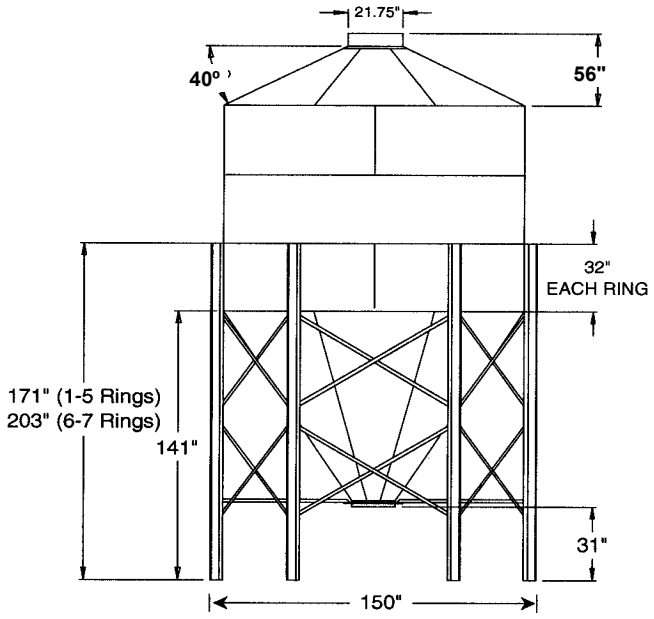

ANCHORING

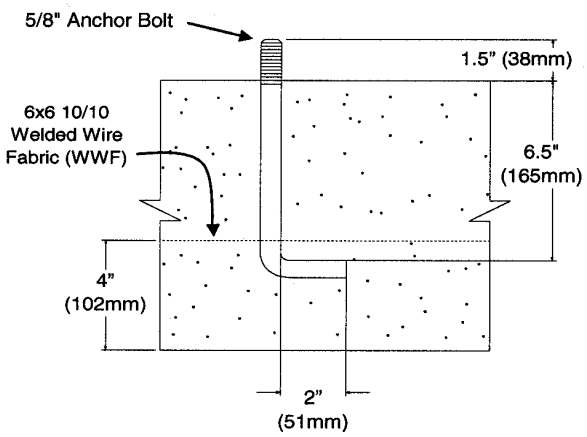

OPTIONAL ANCHOR BOLTS

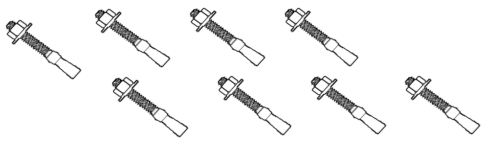

Optional style anchor bolts as shown above are available. Order catalog number 500388 (page 02-09) for 12' bins.

When using this type of anchor bolt, the holes may be drilled after the foundation is set. However, the dimensions for locating the bolts must be held to maintain squareness of the bin.

NOTE: Locating the anchor bolts by using the asembled bin does not assure that the bin will be square and can result in damage to equipment and/or personal injury.

FOUNDATION SPECIFICATIONS

Soil with a bearing capacity of 3500 pounds per square foot (psf) is required for bin foundation. A qualified soil engineer should be consulted if any questions arise. All bin foundations must be smooth and level. All concrete must have a minimum compressive strength of 3000 psi in 28 days. Concrete requirements shown below should be increased by 25" to allow for waste.

12' BIN PADS

7.9 Yards of Concrete Required

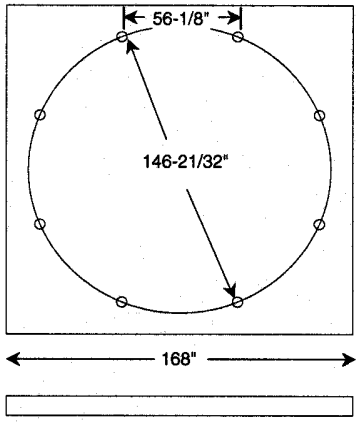

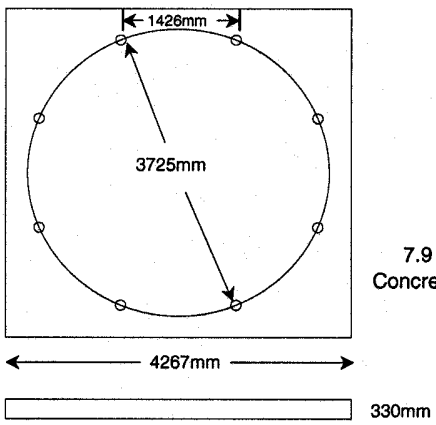

7.9 Yards of Concrete Required

Toll-free: 1-800-99VALCO
Phone: (+1) 419-678-8731
Fax: (+1) 419-678-2200

MODEL 512 BIN - 12' DIAMETER
COMPONENTS REQUIREMENTS

12' DIAMETER BINS

CATALOG NUMBER	COMPONENT DESCRIPTION	LIST PRICE	SHIP WEIGHT LBS.	SHIP WEIGHT KGS.	QUANTITY REQUIRED							QUANTITY REQUIRED							QTY REQ'D	
		BIN SIZE & OPENING:			12' - 16" OPENING							12' - 16" OPENING							12'	
		OPENER TYPE:			WAYBACK OPENER							PNEUMATIC							EXT	
		NUMBER OF RINGS:			1	2	3	4	5	6	7	1	2	3	4	5	6	7	N/A	N/A
		ORDER NUMBER:			512w41	512W42	512W43	512W44	512W45	512W46	512W47	512741	512742	512743	512744	512745	512746	512747	512090	512091
512040	12 ga. Main Hopper - Plain w/Drip Edge		122.0	55.4	0	0	0	0	4	4	4	0	0	0	0	4	4	4	0	0
512038	14 ga. Main Hopper - Plain w/Drip Edge		82.0	37.2	3	4	4	4	0	0	0	3	4	4	4	0	0	0	0	0
512041	14 ga. Main Hopper - Decal w/Drip Edge		82.0	37.2	1	0	0	0	0	0	0	1	0	0	0	0	0	0	0	0
512037	14 ga. Main Hopper - Ext. & Leg		82.0	37.2	0	0	0	0	4	4	4	0	0	0	0	4	4	4	0	0
512011	18 ga. Main Hopper - Plain		52.0	23.6	0	0	4	0	4	4	4	0	0	4	0	4	4	4	0	0
512035	16 ga. Main Hopper - Ext.		68.0	30.9	0	0	0	4	0	4	4	0	0	0	4	0	4	4	0	0
512008	20 ga. Extension Hopper - Plain		42.0	19.1	0	3	3	7	7	7	7	0	3	3	7	7	7	7	4	0
512009	20 ga. Extension Hopper - Decal		42.0	19.1	0	1	1	1	1	1	1	0	1	1	1	1	1	1	0	0
512014	14 ga. Extension Hopper - Plain		82.0	37.2	0	0	0	0	0	0	4	0	0	0	0	0	0	4	0	4
512024	Galv. Leg - 12 ga. 170.88" (1-5R)		60.0	27.3	8	8	8	8	0	0	0	8	8	8	8	0	0	0	0	0
512039	Galv. Leg - 202.88" (6-7R)		111.0	50.4	0	0	0	0	8	8	8	0	0	0	0	8	8	8	0	0
512230	12 ga. Front Cross Tie Angle (1-7 Ring)		5.4	2.5	16	16	16	16	16	16	16	16	16	16	16	16	16	16	0	0
512231	12 ga. Rear Cross Tie Angle (1-7 Ring)		5.3	2.5	16	16	16	16	16	16	16	16	16	16	16	16	16	16	0	0
512232	12 ga. Leg-Collar Brace Angle		5.5	2.5	8	8	8	8	8	8	8	8	8	8	8	8	8	8	0	0
512423	20 ga. Roof Deck Section		20.0	9.1	12	12	12	12	12	12	12	10	10	10	10	10	10	10	0	0
512424	20 ga. Roof Deck Section - Pneum. Fill		19.6	8.9	0	0	0	0	0	0	0	2	2	2	2	2	2	2	0	0
512422	18 ga. Roof Stiffeners 40º		3.9	1.8	12	12	12	12	12	12	12	12	12	12	12	12	12	12	0	0
512018	14 ga. Taper Hopper Section 16"		62.0	28.2	12	12	12	12	12	12	12	12	12	12	12	12	12	12	0	0
512021	Taper Hopper Reinforcement Brace		10.0	4.6	0	0	12	12	12	12	12	0	0	12	12	12	12	12	0	0
512160	Basic Hardware Carton (1-7R)		82.0	37.2	1	1	1	1	1	1	1	1	1	1	1	1	1	1	0	0
512059	Basic Caulking Carton		16.3	7.5	1	1	1	1	1	1	1	1	1	1	1	1	1	1	0	0
512163	202.88" Leg Hardware Carton		5.9	2.7	0	0	0	0	1	1	1	0	0	0	0	1	1	1	0	0
512072	Extension Hardware Carton		7.8	3.6	0	1	2	3	4	5	6	0	1	2	3	4	5	6	1	1
512171	Collar Carton		49.5	17.3	1	1	1	1	1	1	1	1	1	1	1	1	1	1	0	0
500650	Way-Back Lid Carton		32.0	14.6	1	1	1	1	1	1	1	0	0	0	0	0	0	0	0	0
500790	Lid Carton for Pneumatic Fill 40º		11.8	5.4	0	0	0	0	0	0	0	1	1	1	1	1	1	1	0	0
OPTIONAL TRU-LOK ADD-ON																				
500775	Tru-Lok Accessory Carton		10.8	4.9	1	1	1	1	1	1	1									
512727	Tru-Lok Roof Tube - 12'		2.4	1.1	1	1	1	1	1	1	1									
500226	Tru-Lok Basic Tube		5.0	2.3	1	1	2	2	2	2	3									
500729	Tru-Lok Extension Tube		1.9	0.9	2	3	0	1	2	3	0									
500763	Tru-Lok Extension Coupler Tube		1.9	0.9	0	0	1	1	1	1	2									
500728	Tru-Lok Tube Guide (3-6 Ring)		2.5	1.2	0	0	1	1	1	1	1									
OPTIONAL LADDER																				
512772	Basic Ladder		39.0	17.7	1	1	1	1	1	1	1	1	1	1	1	1	1	1		
500191	Extension Ladder		8.9	4.1	2	3	4	5	6	7	8	2	3	4	5	6	7	8		
512051	Ladder Stand-Off Rail		2.7	1.3	2	2	2	2	2	2	2	2	2	2	2	2	2	2		
512916	Roof Ladder		19.0	8.7	1	1	1	1	1	1	1	1	1	1	1	1	1	1		
PNEUMATIC FILL OPTIONS																				
512640	Pneumatic Fill Kit - 12' Bin		50.8	23.1								1	1	1	1	1	1	1		
704441	4" x 4' Galvanized Side Fill Tube		11.0	5.0								0	0	0	0	1	0	0		
704411	4" x 7' Galvanized Side Fill Tube		20.0	9.1								0	0	0	0	0	1	1		
704412	4" x 11' Galvanized Side Fill Tube		36.0	16.4								1	0	0	0	0	0	0		
704413	4" x 15' Galvanized Side Fill Tube		48.0	21.8								0	1	1	0	0	0	0		
704414	4" x 19' Galvanized Side Fill Tube		48.0	21.8								0	0	0	1	1	1	1		
704287	4" Tube Joiner With Hardware		3.0	1.4								0	0	0	0	1	1	1		

FOR INDIVIDUAL REPAIR ITEMS FROM BUNDLES & CARTONS, PLEASE REFER TO PRODUCTMANUALS

Toll-free: 1-800-99VALCO
Phone: (+1) 419-678-8731
Fax: (+1) 419-678-2200

4" & 6" RIGID AUGER

To Order a Rigid Auger System:

Record what horizontal and vertical distance is required ad also what delivery rate is required for the application.
Use the chart on this page (02-21) to determine **Auger Length**, using known horizontal & vertical distances.
Use the chart on page (20-22) to choose what **Diameter Tube** (4" or 6"), **Horsepower**, and **RPM** is required for the application.
Follow the below actions to order complate system.

Action	Description	4" Page #	6" Page #
Choose	Motor, Pulley, and V-Belt	02-23 & 02-24	
Choose 1	Plastic Transition	02-29	
Choose 1	Lower Boot	02-26	02-28
Choose 1	Connection Kit	02-25	02-27
If needed	Auger Braces	02-23	
Choose 1	Auger and Tube Assembly	02-25	02-27
Choose 1	Discharge Head	02-25	02-27
	or		
Choose 1	Discharge Head and Auger Kit	02-25	02-27

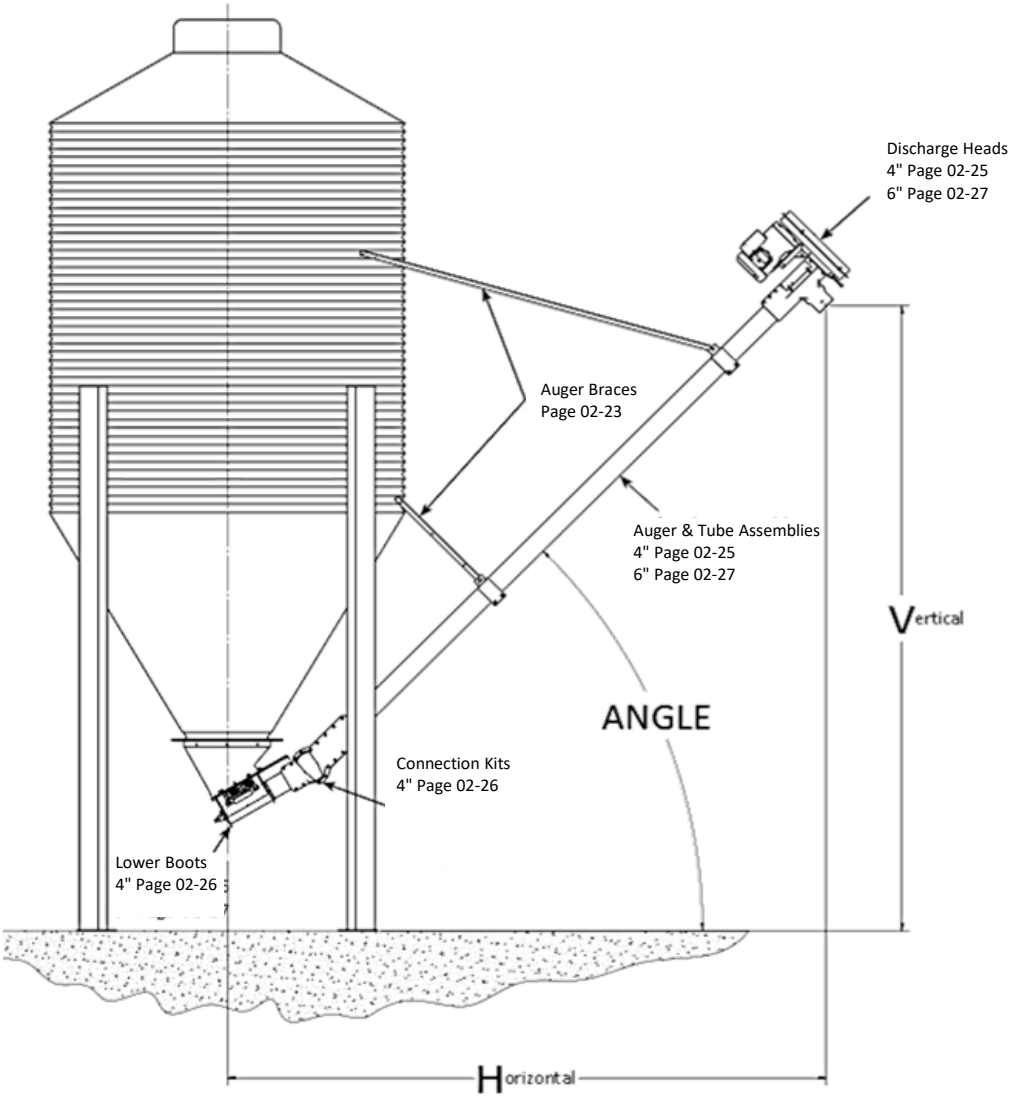

ANGLE OF ELEVATION	AUGER LENGTH													
	5 FT.		8 FT.		11 FT.		12 FT.		16 FT.		20 FT.		21 FT.	
	H	V	H	V	H	V	H	V	H	V	H	V	H	V
15º ANGLE	6' 4"	2' 8"	9' 2"	3' 6"	12' 1"	4' 3"	13' 1"	4' 6"	16' 11"	5' 7"	20' 10"	6' 7"	21' 9"	6' 10"
30º ANGLE	5' 11"	3' 11"	8' 7"	5' 5"	11' 2"	6' 11"	12' 0"	7' 5"	15' 6"	9' 5"	18' 11"	11' 5"	19' 10"	11' 11"
45º ANGLE	5' 4"	5' 0"	7' 5"	7' 2"	9' 7"	9' 3"	10' 3"	10' 0"	13' 1"	12' 10"	15' 11"	15' 8"	16' 7"	16' 4"

Toll-free: 1-800-99VALCO
Phone: (+1) 419-678-8731
Fax: (+1) 419-678-2200

4" & 6" RIGID AUGER CAPACITIES & HORSEPOWER REQUIREMENTS

4" RIGID AUGER CAPACITY & HORSEPOWER REQUIREMENT

DEGREE OF ELEVATION	AUGER SPEED (RPM)	APPROXIMATE CAPACITY LBS. PER HOUR	AUGER LENGTH - HORSEPOWER REQUIREMENT										
			4'	8'	10'	12'	16'	20'	25'	30'	35'	40'	50' - 100'
0° Horizontal	600	25,000	.5	.5	.5	.5	.75	.75	1	1	1.5	1.5	1.5 to 50'
	500	20,000	.5	.5	.5	.5	.5	.75	375	1	1	1.5	1.5 to 60'
	400	14,000	.5	.5	.5	.5	.5	.5	.75	.75	.75	1	1.5 to 75'
	300	9,000	.5	.5	.5	.5	.5	.5	.75	.75	.75	1	1.5 to 100'
30°	600	21,000	.5	.5	.75	.75	1	1.5	1.5	1.5			
	500	17,500	.5	.5	.5	.75	.75	1	1.5	1.5	1.5		
	400	13,500	.5	.5	.5	.5	.75	.75	1	1	1.5		
	300	9,000	.5	.5	.5	.5	.5	.5	.75	.75	1	1.5	
40°	600	21,000	.5	.5	.75	.75	1	1.5	1.5	1.5			
	500	15,500	.5	.5	.5	.5	.75	1	1	1.5	1.5		
	400	12,500	.5	.5	.5	.5	.5	.75	.75	.75	1		
	300	9,000	.5	.5	.5	.5	.5	.5	.75	.75	.75		
45° Maximum	600	14,500	.5	.5	.5	.75	1	1	1.5	1.5			
	500	12,000	.5	.5	.5	.5	.5	.75	.75	1	1		
	400	9,700	.5	.5	.5	.5	.5	.75	.75	1	1		
	300	7,500	.5	.5	.5	.5	.5	.5	.75	.75	.75		

6" RIGID AUGER CAPACITY & HORSEPOWER REQUIREMENT

DEGREE OF ELEVATION	AUGER SPEED (RPM)	APPROXIMATE CAPACITY LBS. PER HOUR	AUGER LENGTH - HORSEPOWER REQUIREMENT											
			6'	11'	16'	21'	30'	40'	50'	60'	70'	80'	90'	100'
0° Horizontal	600	67,500	.75	1	1.5	2	3	5	5	5				
	400	45,000	.75	1	1.5	2	3	3	5	5	5	5		
45° Maximum	600	47,000	.75	1.5	2	3	5							
	400	31,500	.75	1.5	1.5	2	3	5						

Toll-free: 1-800-99VALCO
Phone: (+1) 419-678-8731
Fax: (+1) 419-678-2200

WWW.VAL-CO.COM

PULLEYS - V BELTS - AUGER BRACES

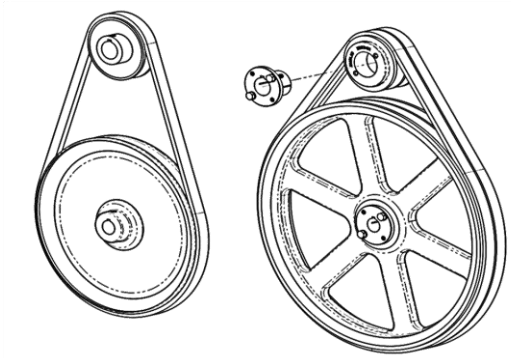

MOTOR PULLEYS

CATALOG #	ITEM DESCRIPTION	SHIP WEIGHT LBS.	SHIP WEIGHT KG.	LIST PRICE
920410	2.5" Single Groove "B" Motor Pulley - 5/8" Bore	1.0	0.5	
920411	3.6" Single Groove "B" Motor Pulley - 5/8" Bore	2.0	0.9	
920416	3.6" Single Groove "B" Motor Pulley - 7/8" Bore	2.0	0.9	
920412	3.6" Single Groove "B" Motor Pulley - 1-1/8" Bore	3.0	1.4	
920413	3.6" Double Groove "B" Motor Bushed Pulley (order bushing below for proper bore size)	3.0	1.4	
920414	5/8" Bore Split Taper Bushing for Double Groove Pulley	1.0	0.5	
920428	7/8" Bore Split Taper Bushing for Double Groove Pulley	1.0	0.5	
920415	1-1/8" Bore Split Taper Bushing for Double Groove Pulley	1.0	0.5	

V-BELTS

CATALOG #	ITEM DESCRIPTION	SHIP WEIGHT LBS.	SHIP WEIGHT KG.	LIST PRICE
920421	36" O.L. "B" Section V-Belt - 4" Auger at 600 rpm	1.0	0.5	
920429	38" O.L. "B" Section V-Belt - 4" Auger at 500 rpm	1.0	0.5	
920424	48" O.L. "B" Section V-Belt - 4" Auger at 400 rpm - 6" Auger at 600 rpm	1.0	0.5	
920425	55" O.L. "B" Section V-Belt - 4" Auger at 300 rpm - 6" Auger at 400 rpm	1.0	0.5	

AUGER BRACES

CATALOG #	ITEM DESCRIPTION	SHIP WEIGHT LBS.	SHIP WEIGHT KG.	LIST PRICE
501965	Regular Auger Brace Set (43.5" - 73.5") for Augers up to 12' Length	8.2	3.7	
501967	Additional Auger Brace Set (158") for Augers over 12' Length	17.0	7.7	
704078	Extra 4" Auger Brace Clamp Band (one clamp is included with the discharge head/motor mount)	1.1	0.5	
706031	Extra 6" Auger Brace Clamp Band (one clamp is included with the discharge head/motor mount)	1.2	0.5	

Most augers are supported by buildings or other structures and auger braces are not needed. If bracing is needed, on augers up to 12' length one set of auger braces is sufficient. For augers over 12' length an additional set of bracing is required to support the added weight & length. The above two lengths of braces are available; if longer braces are required they should be obtained locally using pipe, tubing or angle iron. One auger brace clamp is included with the discharge head/motor mount. Order an additional clamp band from above if needed.

Toll-free: 1-800-99VALCO
Phone: (+1) 419-678-8731
Fax: (+1) 419-678-2200

WWW.VAL-CO.COM

FARM DUTY MOTORS FOR RIGID AUGERS

CATALOG #	ITEM DESCRIPTION	SHIP WEIGHT LBS.	SHIP WEIGHT KG.	LIST PRICE
920401	.50 HP Farm Duty Motor - 110/220V 1PH 60HZ - 5/8" Shaft	24.0	10.9	
920402	.75 HP Farm Duty Motor - 110/220V 1PH 60HZ - 5/8" Shaft	27.0	12.2	
920403	1.0 HP Farm Duty Motor - 110/220V 1PH 60HZ - 5/8" Shaft	34.0	15.4	
920404	1.5 HP Farm Duty Motor - 110/220V 1PH 60HZ - 5/8" Shaft	44.0	20.0	
920405	2.0 HP Farm Duty Motor - 110/220V 1PH 60HZ - 7/8" Shaft	49.3	22.4	
920406	3.0 HP Farm Duty Motor - 110/220V 1PH 60HZ - 1-1/8" Shaft	75.0	34.0	
920407	5.0 HP Farm Duty Motor - 110/220V 1PH 60HZ - 1-1/8" Shaft	87.0	39.5	
920441	.50 HP Farm Duty Motor - 230/460V 3PH 60HZ - 5/8" Shaft	21.0	9.5	
920442	.75 HP Farm Duty Motor - 230/460V 3PH 60HZ - 5/8" Shaft	24.0	10.9	
920443	1.0 HP Farm Duty Motor - 230/460V 3PH 60HZ - 5/8" Shaft	26.0	11.8	
920444	1.5 HP Farm Duty Motor - 230/460V 3PH 60HZ - 5/8" Shaft	30.0	13.6	
920445	2.0 HP Farm Duty Motor - 208-230/460V 3PH 60HZ - 7/8" Shaft	35.0	15.9	
920446	3.0 HP Farm Duty Motor - 230/460V 3PH 60HZ - 1-1/8" Shaft	57.0	25.9	
920447	5.0 HP Farm Duty Motor - 230/460V 3PH 60HZ - 1-1/8" Shaft	74.0	33.6	
920551	.50 HP Farm Duty Motor - 110/220V 1PH 50HZ - 5/8" Shaft	21.0	9.5	
920552	.75 HP Farm Duty Motor - 110/220V 1PH 50HZ - 5/8" Shaft	23.0	10.4	
920553	1.0 HP Farm Duty Motor - 110/220V 1PH 50HZ - 5/8" Shaft	25.0	11.3	
920554	1.5 HP Farm Duty Motor - 110/220V 1PH 50HZ - 5/8" Shaft	30.0	13.6	
920555	2.0 HP Farm Duty Motor - 220V 1PH 50HZ - 1-1/8" Shaft	85.0	38.6	
920556	3.0 HP Farm Duty Motor - 220V 1PH 50HZ - 1-1/8" Shaft	32.1	14.6	
920557	5.0 HP Farm Duty Motor - 220V 1PH 50HZ - 1-1/8" Shaft	105.0	47.6	
920561	.50 HP Farm Duty Motor - 230/460:190/380V 3PH 50HZ - 5/8" Shaft	27.0	12.2	
920562	.75 HP Farm Duty Motor - 208-230/460:190/380V 3PH 50HZ - 5/8" Shaft	24.0	10.9	
920563	1.0 HP Farm Duty Motor - 208-230/460:190/380V 3PH 50HZ - 5/8" Shaft	30.0	13.6	
920564	1.5 HP Farm Duty Motor - 208-220/460:190/380V 3PH 50HZ - 5/8" Shaft	34.0	15.4	
920565	2.0 HP Farm Duty Motor - 208-220/460:190/380V 3PH 50HZ - 7/8" Shaft	30.0	13.6	
920566	3.0 HP Farm Duty Motor - 208-230/460:190/380V 3PH 50HZ - 1-1/8" Shaft	54.0	24.5	
920567	5.0 HP Farm Duty Motor - 208-230/460:190/380V 3PH 50HZ - 1-1/8" Shaft	63.0	28.6	

SEE CATALOG SECTION 20 FOR A COMPLETE DESCRIPTION OF ALL MOTORS

Toll-free: 1-800-99VALCO
Phone: (+1) 419-678-8731
Fax: (+1) 419-678-2200

4" RIGID AUGER FEED DELIVERY SYSTEM COMPONENTS

4" DISCHARGE HEAD (600 RPM) & AUGER ASSEMBLY

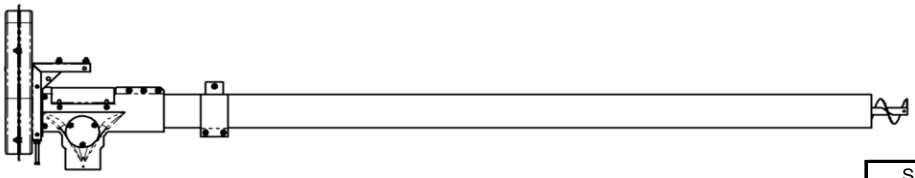

CATALOG #	ITEM DESCRIPTION	SHIP WEIGHT LBS.	SHIP WEIGHT KG.	LIST PRICE
704289	4" x 5' Auger & Tube With Discharge Head/Motor Mount	34.0	16.0	
704058	4" x 8' Auger & Tube With Discharge Head/Motor Mount	48.0	22.0	
704059	4" x 12' Auger & Tube With Discharge Head/Motor Mount	65.6	30.0	
704060	4" x 16' Auger & Tube With Discharge Head/Motor Mount	77.0	35.0	
704061	4" x 21' Auger & Tube With Discharge Head/Motor Mount	94.6	43.0	

The above auger assemblies include a 704272 discharge head/motor mount with 600 rpm driven pulley. Determine feed delivery capacity and horsepower requipment using the chart on page 02-22 and order a farm duty motor from page 02-24, a 2.5" motor pulley, the correct v-belt, and auger braces set(s) separately from page 02-23. If double groove pulley or 300/400/500 rpm auger speed is required, order separate components from page 02-25, below.

4" DISCHARGE HEADS

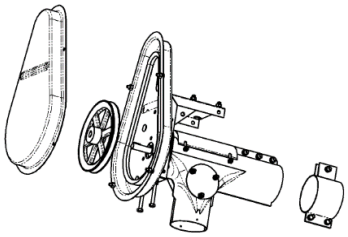

704272 shown for reference

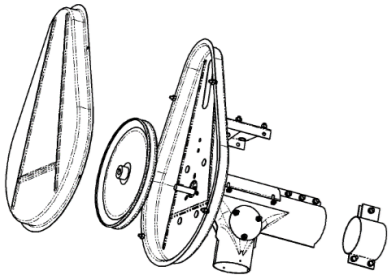

704270 shown for reference

CATALOG #	ITEM DESCRIPTION	SHIP WEIGHT LBS.	SHIP WEIGHT KG.	LIST PRICE
704272	4" Discharge Head/Motor Mount - Single Belt - 7.6" 600 RPM Pulley	21.8	9.9	
704271	4" Discharge Head/Motor Mount - Single Belt - 8.6" 500 RPM Pulley	22.0	10.0	
704270	4" Discharge Head/Motor Mount - Single Belt - 11.6" 400 RPM Pulley	23.0	10.4	
704269	4" Discharge Head/Motor Mount - Single Belt - 14.6" 300 RPM Pulley	24.0	10.9	

Order a farm duty motor from page 02-24; 2.5" motor pulley and correct size v-belt from page 02-23. See recommended horsepower requirement and approximate delivery capacities on page 02-22.

4" AUGER & TUBE ASSEMBLIES

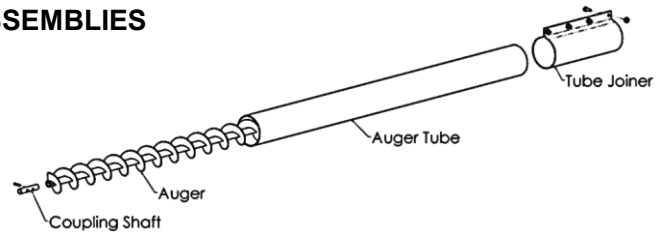

CATALOG #	ITEM DESCRIPTION	SHIP WEIGHT LBS.	SHIP WEIGHT KG.	LIST PRICE
704284	4" x 4' Extension Auger & Tube Assy	22.0	10.0	
704211	4" x 7' Extension Auger & Tube Assy	30.0	13.6	
704212	4" x 11' Extension Auger & Tube Assy	45.0	20.4	
704213	4" x 15' Extension Auger & Tube Assy	61.0	27.7	
704214	4" x 19' Extension Auger & Tube Assy	78.9	35.8	

Above include auger, tube, tube joiner, auger coupling shaft and all required hardware.

Toll-free: 1-800-99VALCO
Phone: (+1) 419-678-8731
Fax: (+1) 419-678-2200

4" RIGID AUGER FEED DELIVERY SYSTEM COMPONENTS

4" RIGID AUGER LOWER BOOT & CONNECTION KITS

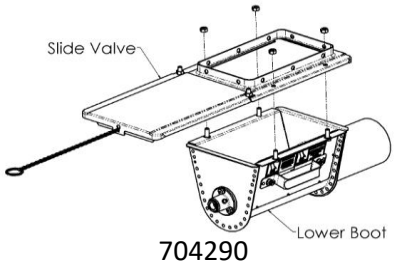

704290

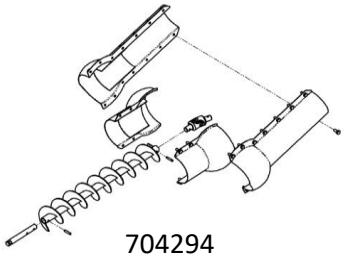

704294

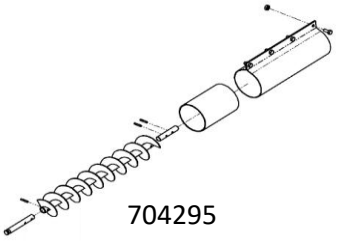

704295

CATALOG #	ITEM DESCRIPTION	SHIP WEIGHT LBS.	SHIP WEIGHT KG.	LIST PRICE
704290	4" Rigid Auger Lower Boot With Slide Valve	16.2	7.4	
704294	4" Universal Parts Adjustable Auger Connection Kit	10.2	4.7	
704295	4" Straight-Out Non-Adjustable Auger Connection Kit	8.2	3.8	

To order a complete 4" rigid auger boot for 16" bin opening, select a plastic upper boot transition from above. Then select the 704290 lower boot and your choice of either a 704294 adjustable auger connection kit or a 704295 non-adjustable auger connection kit. The adjustable auger connection kit allows for 10º - 50º auger adjustment when used with a 30º plastic upper boot transition. The non-adjustable auger connection kit sets the auger at the same angle as the selected plastic upper boot transition.

4" AUGERS & TUBES ONLY

CATALOG #	ITEM DESCRIPTION	SHIP WEIGHT LBS.	SHIP WEIGHT KG.	LIST PRICE
704281	4" x 4' Auger Only	6.0	2.7	
704069	4" x 7' Auger Only	11.0	5.0	
704070	4" x 11' Auger Only	17.0	7.7	
704071	4" x 15' Auger Only	22.0	10.0	
704072	4" x 19' Auger Only	27.0	12.2	
704441	4" x 4' Galvanized Tube Only	11.0	5.0	
704411	4" x 7' Galvanized Tube Only	20.0	9.1	
704412	4" x 11' Galvanized Tube Only	36.0	16.3	
704413	4" x 15' Galvanized Tube Only	48.0	21.8	
704414	4" x 19' Galvanized Tube Only	48.0	21.8	

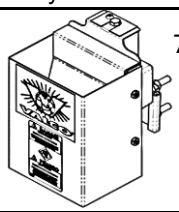

720097

4" AUGER ACCESSORIES

CATALOG #	ITEM DESCRIPTION	SHIP WEIGHT LBS.	SHIP WEIGHT KG.	LIST PRICE
704278	Coupling Shaft Only With Pins	0.1	0.1	
704287	Tube Joiner Only With Hardware	3.0	1.4	
704285	Coupling Shaft & Tube Joiner With Pins & Hardware	3.9	1.8	
704078	Tube Clamp Band & Hanger Assy	1.1	0.5	
704243	Receiving Hopper With Hinged Lid	28.0	12.7	
704420	4" ID Flexible Rubber Downspout Tube - 25' Roll	26.3	11.9	
735431	Downspout SS Connector Clamp	0.1	0.0	
720097	Hopper Level Switch - Adjustable Sensitivity	4.8	2.2	

Toll-free: 1-800-99VALCO
Phone: (+1) 419-678-8731
Fax: (+1) 419-678-2200

6" RIGID AUGER FEED DELIVERY SYSTEM COMPONENTS

6" DISCHARGE HEAD (600RPM) & AUGER ASSEMBLY

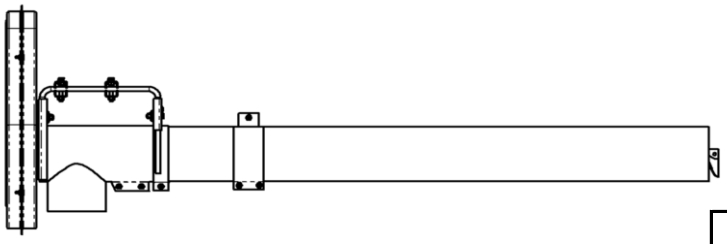

CATALOG #	ITEM DESCRIPTION	SHIP WEIGHT LBS.	SHIP WEIGHT KG.	LIST PRICE
706168	6" X 6' Auger & Tube With Discharge Head/Motor Mount	65.0	30.0	
706061	6" X 11' Auger & Tube With Discharge Head/Motor Mount	96.5	44.0	
706062	6" X 16' Auger & Tube With Discharge Head/Motor Mount	129.5	59.0	
706063	6" X 21' Auger & Tube With Discharge Head/Motor Mount	162.5	74.0	
706106	Motor Mount Adapter Plate for Motors Over 2.0 HP	2.0	1.0	

The above auger assemblies include a 706165 discharge head/motor mount with 600 rpm driven pulley. Determine feed delivery capacity and horsepower requipment using the chart on page 02-22 and order a farm duty motor from page 02-24, a 3.6" motor pulley, the correct v-belt, and auger braces set(s) separately from page 02-23. If double groove pulley or 400 rpm auger speed is required, order separate components from page 02-27, below.

6" DISCHARGE HEAD

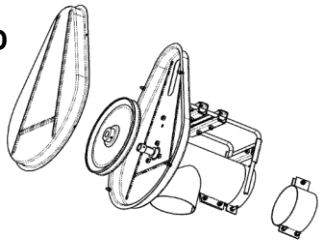

706165 shown for reference

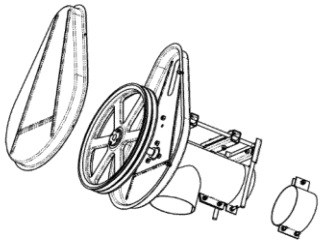

706172 shown for reference

CATALOG #	ITEM DESCRIPTION	SHIP WEIGHT LBS.	SHIP WEIGHT KG.	LIST PRICE
706165	6" Discharge Head/Motor Mount - Single Belt - 10.6" 600 RPM Pulley	32.5	14.8	
706166	6" Discharge Head/Motor Mount - Single Belt - 14.6" 400 RPM Pulley	0.0	0.0	
706171	6" Discharge Head/Motor Mount - Double Belt - 10.6" 600 RPM Pulley	37.6	17.0	
706172	6" Discharge Head/Motor Mount - Double Belt - 14.6" 400 RPM Pulley	0.0	0.0	
706106	Motor Mount Adapter Plate for 182/184 Frame Motor	2.0	0.9	

Order a farm duty motor from page 02-24; 3.6" motor pulley and correct size v-belt from page 02-23. See recommended horsepower requirement and approximate delivery capacities on page 02-22.

6" AUGER & TUBE ASSEMBLIES

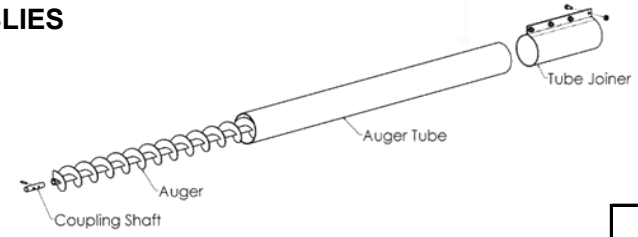

CATALOG #	ITEM DESCRIPTION	SHIP WEIGHT LBS.	SHIP WEIGHT KG.	LIST PRICE
706125	6" x 5' Extension Auger & Tube Assy	38.0	17.2	
706130	6" x 10' Extension Auger & Tube Assy	70.0	31.7	
706135	6" x 15' Extension Auger & Tube Assy	103.0	46.7	
706140	6" x 20' Extension Auger & Tube Assy	136.0	61.7	

Above include auger, tube, tube joiner, auger coupling shaft and all required hardware.

Toll-free: 1-800-99VALCO
Phone: (+1) 419-678-8731
Fax: (+1) 419-678-2200

6" RIGID AUGER FEED DELIVERY SYSTEM COMPONENTS

6" RIGID AUGER LOWER BOOT & CONNECTION KITS

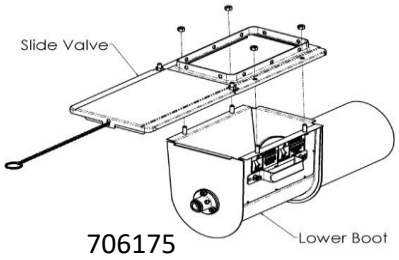

706175

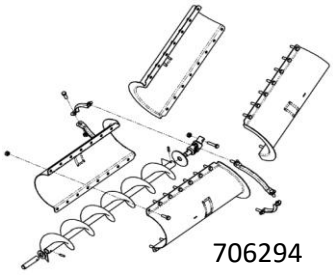

706294

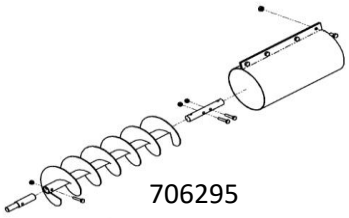

706295

CATALOG #	ITEM DESCRIPTION	SHIP WEIGHT LBS.	SHIP WEIGHT KG.	LIST PRICE
706175	6" Rigid Auger Lower Boot With Slide Valve	15.9	7.3	
706294	6" Universal Parts Adjustable Auger Connection Kit	20.0	9.1	
706295	6" Non-Adjustable Auger Connection Kit	10.3	4.7	

To order a complete 6" rigid auger boot for 16" bin opening, select a plastic upper boot transition from above. Then select the 706175 lower boot and your choice of either a 706294 adjustable auger connection kit or a 706295 non-adjustable auger connection kit. The adjustable auger connection kit allows for 10º - 50º auger adjustment when used with a 30º plastic upper boot transition. The non-adjustable auger connection kit sets the auger at the same angle as the selected plastic upper boot transition.

6" AUGER & TUBES ONLY

CATALOG #	ITEM DESCRIPTION	SHIP WEIGHT LBS.	SHIP WEIGHT KG.	LIST PRICE
706126	6" x 5' Auger Only	11.0	5.0	
706131	6" x 10' Auger Only	22.0	10.0	
706136	6" x 15' Auger Only	34.0	15.4	
706141	6" x 20' Auger Only	46.0	20.9	
706127	6" x 5' Galvanized Tube Only	21.0	9.5	
706411	6" x 10' Galvanized Tube Only	42.0	19.1	
706410	6" x 15' Galvanized Tube Only	63.0	28.6	
706409	6" x 20' Galvanized Tube Only	84.0	38.1	

6" AUGER ACCESSORIES

CATALOG #	ITEM DESCRIPTION	SHIP WEIGHT LBS.	SHIP WEIGHT KG.	LIST PRICE
706164	Coupling Shaft Only With Hardware	0.8	0.4	
706084	Tube Joiner Only With Hardware	4.2	1.9	
706169	Coupling Shaft & Tube Joiner With Pins & Hardware	6.0	2.7	
706031	Tube Clamp Band & Hanger Assy	1.2	0.5	
706150	Receiving Hopper With Hinged Lid	0.0	0.0	
706420	Downspout SS Connector Clamp	0.0	0.0	
720097	Hopper Level Switch - Adjustable Sensitivity	4.8	2.2	

Toll-free: 1-800-99VALCO
Phone: (+1) 419-678-8731
Fax: (+1) 419-678-2200

UPPER BOOT TRANSITIONS

UPPER BOOT TRANSITIONS

CATALOG #	ITEM DESCRIPTION	SHIP WEIGHT LBS.	SHIP WEIGHT KG.	LIST PRICE
500475	30º Plastic Upper Boot Transition - Green	4.9	2.3	
500857	30º Plastic Upper Boot Transition - Semi-Translucent	4.4	2.0	
500575	30º Plastic Upper Boot Transition - Clear	4.6	2.1	
500485	Straight Single Plastic Upper Boot Transition - Green	5.5	2.5	
500855	Straight Single Plastic Upper Boot Transition - Semi-Translucent	5.6	2.6	
500585	Straight Single Plastic Upper Boot Transition - Clear	4.8	2.2	
500850	Straight Triple Boot Transition - Metal	55.6	25.3	
700010	Straight Double Plastic Upper Boot Transition - Green	7.0	3.2	
501480	7.5º Transition Wedge Assembly Kit	2.9	1.4	
501470	15º Transition Wedge Assembly Kit (can be used in conjuction with 30º Boot to achieve 45º)	4.4	2.0	

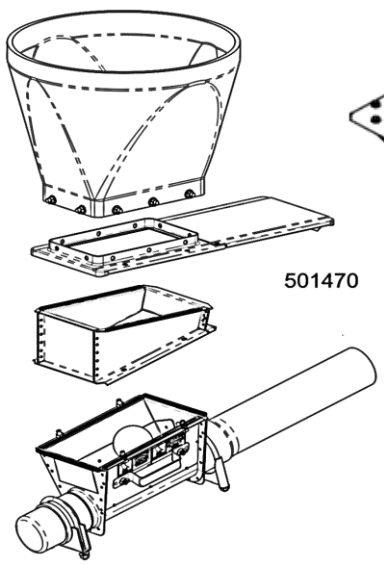

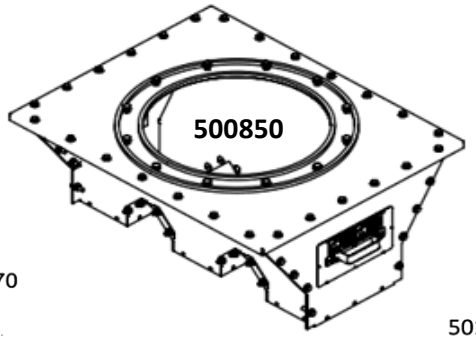

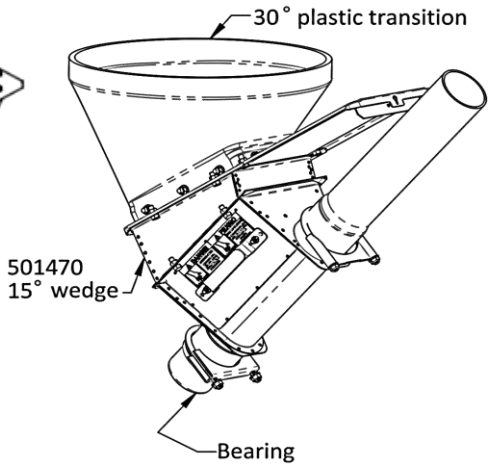

This page left intentionally blank